TOSHIBA

SERVICE HANDBOOK

DIGITAL MULTI FUNCTION

e-STUDIO160/200/250

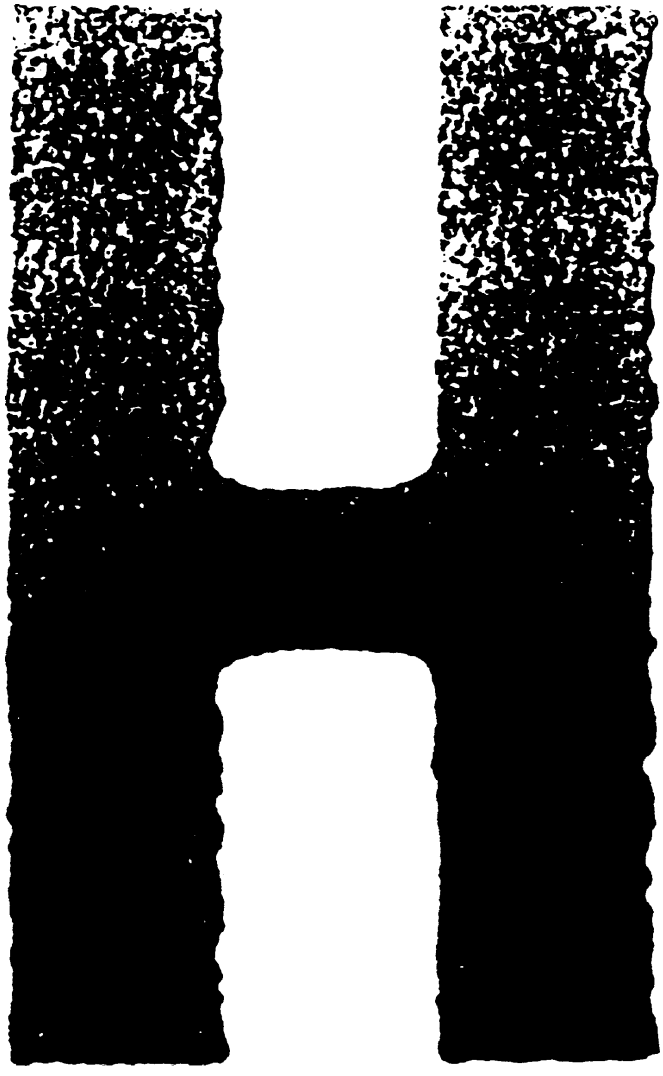

File No. SHE02000200
Version 00

© 2002 TOSHIBA TEC CORPORATION
All rights reserved

GENERAL PRECAUTIONS REGARDING THE INSTALLATION AND SERVICE FOR e-STUDIO160/200/250 SERIES

The installation and service should be done by a qualified service technician.

1. Transportation

- When transporting/installing the copier, employ two persons and be sure to use the positions as indicated below.

  The copier is fairly heavy and weighs approximately 50 kg (110 lb), therefore pay full attention when handling it.

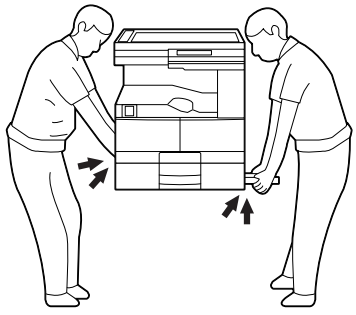

4 portions

2. Installation

- Be sure to use a dedicated outlet with AC 115 or 120V/15A (220V, 230V, 240V/10A) or more for its power source.
- The copier must be grounded for safety.

  Never ground it to a gas pipe or a water pipe.
- Select a suitable place for installation.

  Avoid excessive heat, high humidity, dust, vibration and direct sunlight.
- Also provide proper ventilation as the copier emits a slight amount of ozone.
- To insure adequate working space for the copying operation, keep a minimum clearance of 80 cm (32") on the left, 80 cm (32") on the right and 10 cm (4") in the rear.
- After having installed the copier, be sure to push the carrying handles into the copier.

3. Service of Machines

- Basically, be sure to turn the main switch off and unplug the power cord during service.
- Be sure not to touch high-temperature sections such as the exposure lamp, the fuser unit, the damp heater and their periphery.
- Be sure not to touch high-voltage sections such as the chargers and the high-voltage transformer.
- Be sure not to touch rotating/operating sections such as gears, belts, pulleys, fans, etc.
- When servicing the machines with the main switch turned on, be sure not to touch live sections and rotating/operating sections. Avoid exposure to laser radiation.
- Use suitable measuring instruments and tools.

- Avoid exposure to laser radiation during servicing.
  - Avoid direct exposure to beam.
  - Do not insert tools, parts, etc. that are reflective into the path of the laser beam.
  - Remove all watches, rings, bracelets, etc. that are reflective.

4. Main Service Parts for Safety

- The breaker, door switch, fuse, thermostat, thermofuse, thermistor, etc. are particularly important for safety. Be sure to handle/install them properly.

5. Cautionary Labels

- During servicing, be sure to check the rating plate and the cautionary labels such as “Unplug the power cord during service”, “Hot area”, “Laser warning label” etc. to see if there is any dirt on their surface and whether they are properly stuck to the copier.

6. Disposition of Consumable Parts/Packing Materials

- Regarding the recovery and disposal of the copier, supplies, consumable parts and packingm a - terials, it is recommended to follow the relevant local regulations or rules.

7. When parts are disassembled, reassembly is basically the reverse of disassembly unless otherwise noted in this manual or other related documents. Be careful not to reassemble small parts such as screws, washers, pins, E-rings, toothed washers in the wrong places.

8. Basically, the machine should not be operated with any parts removed or disassembled.

9. Precautions Against Static Electricity

- The PC board must be stored in an anti-electrostatic bag and handled carefully using a wristband, because the ICs on it may become damaged due to static electricity.

Caution: Before using the wrist band, pull out the power cord plug of the copier and make sure that there is no uninsulated charged objects in the vicinity.

Caution:	Dispose of used batteries and RAM-ICs including lithium batteries according to the manufacturer's instructions.
Attention:	Se débarrasser de batteries et RAM-ICs usés y compris les batteries en lithium selon les instructions du fabricant.
Vorsicht:	Entsorgung des gebrauchten Batterien und RAM-ICs (inklusive der Lithium-Batterie) nach Angaben des Herstellers.

CONTENTS

1. ADJUSTMENT ITEMS 1-1
1.1 Error Code List 1-1
1.2 Self-Diagnosis Modes 1-6
1.2.1 Adjust mode (05) 1-8
1.2.2 System mode 1-13
1.2.3 User test mode 1-18
1.2.4 Function test 1-21
1.2.5 MAINTENANCE 1-38
1.2.6 SERVICE LIST 1-43
1.2.7 Country/Region code 1-49
1.2.8 Scanner parking mode 1-50
1.2.9 Speaker volume 1-51
1.2.10 Adjustment of document width sensor 1-52
1.3 Image Quality Control 1-53
1.4 Copy Image Dimension Adjustment 1-54
1.4.1 Adjustment of paper aligning value 1-55
1.4.2 Printer unit adjustment 1-56
1.4.3 Scanner unit adjustment 1-61
1.5 Sharpness (HPF) Adjustment 1-66
1.6 Gamma Slope Correction 1-67
1.7 High-Voltage Adjustment 1-68
1.7.1 Adjustment 1-68
1.7.2 Precautions 1-71
1.8 Adjusting the Scanner Section 1-74
1.8.1 Installing glass 1-74
1.8.2 Installing scanner motor 1-76
1.8.3 Adjusting the carriage 1 1-77
1.8.4 Installing carriage 2 1-79
1.8.5 CCD unit 1-82
1.9 Adjusting the main drive gear assembly 1-86
1.10 MAIN PWA replacement procedure 1-90
1.11 Measurement of Transfer Guide Bias 1-92
1.12 Adjustment of the doctor-sleeve gap 1-94

2. PREVENTIVE MAINTENANCE (PM) 2-1
2.1 Maintenance Performed Every 81,000 (e-STUDIO160/200 Series) and 99,000 Copies (e-STUDIO250 Series) 2-1
2.2 Preventive Maintenance Check List 2-1
2.3 PM Kit 2-14
2.4 List of Adjustment Tools 2-15
2.5 List of Grease 2-15

3. PRECAUTIONS FOR STORING & HANDLING SUPPLIES 3-1
3.1 Precautions for Storing TOSHIBA Supplies 3-1
3.2 Checking and Cleaning of the Pressure Roller 3-2
3.3 Checking and Cleaning of the Cleaning Roller 3-2
3.4 Checking and Cleaning of the Heat Roller 3-3
3.5 Checking and Replacing of the Transfer Guide Roller 3-3
3.6 Checking and Cleaning of Photoconductive Drum 3-4
3.7 Checking and Cleaning of Drum Cleaning Blade 3-5

4. TROUBLESHOOTING 4-1
4.1 Troubleshooting Based on Error Code 4-2
4.1.1 Transporting jam in the main body 4-2
4.1.2 Paper feeding jam 4-7
4.1.3 Transporting jam for the optional trays 4-13
4.1.4 Paper jam if some cover is opened 4-18
4.1.5 Paper transporting jam at the ADF 4-22
4.1.6 Paper transporting jam at the RADF 4-24
4.1.7 Paper jam in finisher 4-26
4.1.8 Drive system service call 4-30
4.1.9 Temporary paper supply mechanism service call 4-33
4.1.10 Optical system service call 4-39
4.1.11 Process system service call 4-41
4.1.12 Fuser system service call 4-41
4.1.13 Communications system service call 4-42
4.1.14 ADF or RADF system service call 4-44
4.1.15 Other abnormal service call 4-48
4.1.16 Laser optical system service call 4-49
4.1.17 Finisher related service call 4-50
4.1.18 Scanner related service call 4-55
4.1.19 Printer related service call 4-56
4.1.20 Fax related service call 4-56
4.1.21 OCT system service call 4-57
4.1.22 Other service call 4-57
4.2 Troubleshooting of Image 4-58

5. UPDATING THE FIRMWARE 5-1
5.1 Outline 5-1
5.2 Using the Recovery PWA 5-2
5.2.1 Using main recovery PWA 5-2
5.2.2 Using the scanner recovery PWA 5-5
5.3 Using the Batch File 5-8
5.3.1 Creating Download Disks 5-8
5.3.2 Downloading 5-13
5.4 Using the TOSHIBA Viewer 5-20

6. WIRE HARNESS CONNECTION DIAGRAMS 6-1
6.1 AC Wire Harness 6-1

APPENDIX A-1
Appendix A. Specifications A-1
Appendix B. Accessories A-5
Appendix C. Options A-6
Appendix D. Replacement Units/Supplies A-6
Appendix E. System List A-7
Appendix F. Power Supply Unit A-8

1. ADJUSTMENT ITEMS

2. PREVENTIVE MAINTENANCE (PM)

3. PRECAUTIONS FOR STORING & HANDLING SUPPLIES

4. TROUBLESHOOTING

5. UPDATING THE FIRMWARE

6. WIRE HARNESS CONNECTION DIAGRAMS

1. ADJUSTMENT ITEMS

1.1 Error Code List

While the error message or “Call for service” symbol is flashing, pressing the [CLEAR/STOP] key and the [8] key on the digital keys at the same time shows one of the following error codes on the copy-quantity indicator as long as those keys are pressed.

Classification	Error code	Machine status
Transporting jam in the main body	E01	Paper jam inside the machine
	E02	Paper jam near the fuser unit
	E03	Paper remaining inside the machine at power on (Except for ADF/RADF)
	E04 to E07	Reserved
	E08	Transporting jam inside the ADU
	E09	Time out error that occurs at the paper feeding sensor
	E10	Reserved
Paper feeding jam	E11	Paper feeding jam at the ADU
	E12	Paper feeding jam at the SFB
	E13	Cassette 1 feeding jam
	E14	Cassette 2 feeding jam (PFU)
	E15	Cassette 3 feeding jam (PFP)
	E16	Cassette 4 (CM) feeding jam (e-STUDIO200/250 series)
	E17 to E18	Reserved
	E19	LCF feeding jam (e-STUDIO200/250 series)
	E20 to E30	Reserved
Transporting jam for the optional trays	E31	Paper not reach to feed sensor from cassette 2, so paper jam inside the main unit during cassette 2 feed
	E32	Paper not reach to feed sensor from cassette 3 or 4, so paper jam inside the main unit during the feed
	E33	Paper not reach to feed sensor from LCF cassette. (e-STUDIO200/250 series)
	E34	Paper not reach to 2nd cassette feed sensor from cassette 3 or 4. (Cassette 4 is e-STUDIO200/250 series)
	E35	Paper jam in cassette 4 transport path (e-STUDIO200/250 series)
	E36	Paper jam in LCF transport path (e-STUDIO200/250 series)
	E37 to E40	Reserved

Classification	Error code	Machine status
Paper jam if some cover is opened	E41	Copier front cover or side cover is opened during copying (Copier front cover, side cover, or transport cover of job separator/offset tray/bridge cover is opened during copying)
	E42	Side cover of cassette 2 or cassette 3 is opened during copying
	E43	ADU is opened during copying
	E44	Reserved
	E45	Side cover of LCF is opened during copying (e-STUDIO200/250 series)
	E46 to E70	Reserved
Paper transporting jam at the ADF or RADF	E71	Original feeding jam at the feeding area of the ADF or RADF
	E72	Original transporting jam at the transporting area of the ADF or RADF
	E73	Original exiting jam at the exiting area of the ADF or RADF
	E74	Original reversing jam at the reversing area of the RADF
	E75 to EA0	Reserved
Paper jam in the finisher (e-STUDIO200/250 series)	EA1	Paper transport delay jam
	EA2	Paper transport stop jam
	EA3	Paper remaining on the finisher transport path at power ON
	EA4	Finisher is opened during copying
	EA5	Finisher staple jam
	EA6	Finisher early arrival jam
	EA7	Set transport jam before stapling
	EA8 to EAE	Reserved
	EAF	Stapled set transport jam
	EB1 to EZ9	Reserved
Life end	-	Process unit life nearly end
	-	Toner is nearly empty
Other operator calls	-	No toner cartridge
	-	Toner empty
	-	No process unit
	-	Process unit life end
	-	Upper tray of the job separator is full
	-	Lower tray of the job separator is full
	-	Offset tray is full
	-	Finisher tray is full (e-STUDIO200/250 series)

Classification	Error code	Machine status
Other operator calls	-	Internal tray full (when finisher bridge installed) (e-STUDIO200/250 series)
	-	No paper in the cassette 1
	-	No paper in the cassette 2
	-	No paper in the cassette 3
	-	No paper in the cassette 4 (e-STUDIO200/250 series)
	-	No paper in the LCF (e-STUDIO200/250 series)
	-	Cassette 1 is not ready
	-	Cassette 2 is not ready
	-	Cassette 3 is not ready
	-	Cassette 4 is not ready (e-STUDIO200/250 series)
	-	LCF is not installed (e-STUDIO200/250 series)
		Front cover or side cover of the copier is open
		Cover of the job separator is open
		Cover of the off set catch tray is open
		Cover of the bridge cover is open (e-STUDIO200/250 series)
		Cover of the ADU is open
		Side cover of the cassette 2 is open
		Side cover of the cassette 3 is open
		Side cover of the LCF is open (e-STUDIO200/250 series)
		Finisher joint is open (e-STUDIO200/250 series)
CALL SERVICE from drive system		No staples (displayed only when stapling is designated) (e-STUDIO200/250 series)
	C01	Main motor drive error
	C02 to C03	Reserved
	C04	PFP main motor drive error
	C05	Reserved
Temporary paper supply mechanism error	C06	LCF feed motor error (e-STUDIO200/250 series)
	C07 to C10	Reserved
	C11 to C12	Reserved
	C13	Cassette 1 error
	C14	Cassette 2 error
	C15	Cassette 3 error
	C16	Cassette 4 error (e-STUDIO200/250 series)
	C17	Reserved
	C18	LCF tray error (e-STUDIO200/250 series)
	C19	LCF feed motor abnormal (e-STUDIO200/250 series)
	C20	Reserved

Classification	Error code	Machine status
CALL SERVICE from the optical system	C21	Carriage initialization error
	C22 to C24	Reserved
	C25	Scanner unit watch dog error
	C26	Exposure lamp disconnection or peak detection error
	C27 to C30	Reserved
CALL SERVICE from the process system	C31 to C37	Reserved
	C38	Replaced process unit error
	C39 to C40	Reserved
CALL SERVICE from fuser area	C41	Abnormal thermistor or heater disconnection at power ON
	C42	Reserved
	C43	Warming up mode after disconnection judgment, or abnormal thermistor after ready
	C44	Warming up mode after disconnection judgment, or heater abnormal after ready
	C45	Thermistor disconnection at the end part of heater
	C46 to C50	Reserved
CALL SERVICE from communication	C51 to C55	Reserved
	C56	Communication error between PFC and main unit
	C57	Communication error between main unit and IPC (e-STUDIO200/250 series)
	C58	Communication error between IPC and finisher (e-STUDIO200/250 series)
	C59 to C70	Reserved
CALL SERVICE from ADF or RADF	C71	Paper supply motor lock error
	C72	Reserved
	C73	EE-PROM initialization error
	C74	Defective adjustment by the exit/reversal sensor detected
	C75 to C80	Reserved
	C81	Fan motor lock error
	C82	Document aligning lower sensor (RADF)/Aligning sensor (ADF) adjustment error
	C83	Size length adjustment error
	C84 to C89	Reserved

Classification	Error code	Machine status
CALL SERVICE from others	C90	Reserved
	C91	SRAM abnormality (Lithium battery or SRAM chip are abnormal.)
	C92 to C94	Reserved
	C95	Power supply unit fan motor abnormality
	C96	Process unit fan motor abnormality
CALL SERVICE from laser optical system	C97	Vacuum fan motor abnormality
	C98	Clock IC abnormality
	C99	PFC microcomputer abnormal
CALL SERVICE from finisher (e-STUDIO200/250 series)	CA1	Polygon motor abnormal
	CA2	HSYNC abnormal
	CA3 to CB0	Reserved
	CB1	Reserved
	CB2	Exit motor abnormal
	CB3	Reserved
	CB4	Reserved
	CB5	Staple motor abnormal
	CB6 to CC2	Reserved
	CC3	Set processing motor abnormal
	CC4 to CC7	Reserved
	CC8	Front aligning motor abnormal
	CC9	Upper tray elevator motor abnormal
	CCA	Lower tray elevator motor abnormal
	CCB	Rear aligning motor abnormal
	CCC to CD0	Reserved
Reserved	F01 to F10	Reserved
Scanner I/F	F11	Scanner I/F error
	F12	Write error at downloading the scanner unit program
	F13	Download sector error of the scanner unit program
	F14	Scanner unit F-ROM error
	F15 to F20	Reserved
FAX unit	F31	Modem IC does not work normal
	F32 to F40	Reserved
Offset catch tray	F41	Initial detection error of the offset catch tray
Reserved	F42 to F99	Reserved

1.2 Self-Diagnosis Modes

The self-diagnosis functions are used to make the settings for the various PPC functions. This document describes the self-diagnosis functions.

For the FAX functions, refer to the SERVICE HANDBOOK (GD-1061).

For the method to enter each mode of the self-diagnosis functions, refer to the following chart.

Mode	How to enter	Definition	How to clear
Country/Region code	Turn the power on while pressing the 0 and 2 keys.	Selects the country/region code.	*1
Adjust mode	Turn the power on while pressing the 0 and 5 keys.	Finely adjusts copy image quality. Confirmation printing enabled by pressing the INTERRUPT key.	Turn the power off.
System mode	Turn the power on while pressing the 0 and 8 keys.	Performs setups for the system, maintenance, operations, printer, scanner, etc.	Turn the power off.
Scanner parking mode	Turn the power on while pressing the 0 and 9 keys.	Fixes the scanner carriage in place when transporting the copier.	Turn the power off.
RAM clear	Turn the power on while pressing the 1, 3, and * keys.	Clears values excluding the ones set in 08-446/447 and in the Adjust mode (05).	*2
Service mode *3	Press the PROGRAM key while REDAY is indicated, and then press the *, #, *, then * keys.	Performs setups for FUNCTION TEST and MAINTENANCE, and prints the Service List.	Press the PROGRAM key, and then press the *, #, *, then * keys. Or turn the power off. Or press the COPY key, or press the MAIN MENU key. *4
FUNCTION TEST	After entering the service mode, select it on the screen. This mode is selected by turning the power on while pressing the 1 and 3 keys.	Conducts OPE. PANEL TEST, PRINT TEST, MODEM TEST, etc.	
MAINTENANCE	After entering Service Mode, select it on the screen.	Performs setups for Memory Clear, facsimile function, etc.	
Service list	After entering Service Mode, select it on the screen.	Prints PROTOCOL TRACE, Total Error, FUNCTION LIST, etc.	

*1: After inputting the country/region code, the copier automatically enters the warm up mode.

*2: After the RAM clear, the machine automatically enters the warm up mode.

*3: In the SERVICE MODE, each function of the FUNCTION TEST, MAINTENANCE, or SERVICE LIST in each test item of the TEST MODE (displayed by pressing the PROGRAM key), are added. When the copier enters this mode, these functions are available.

*4 The copier enters into the service mode by pressing 1 and 3 keys while turning the power on. To exit from the service mode, turn the power off.

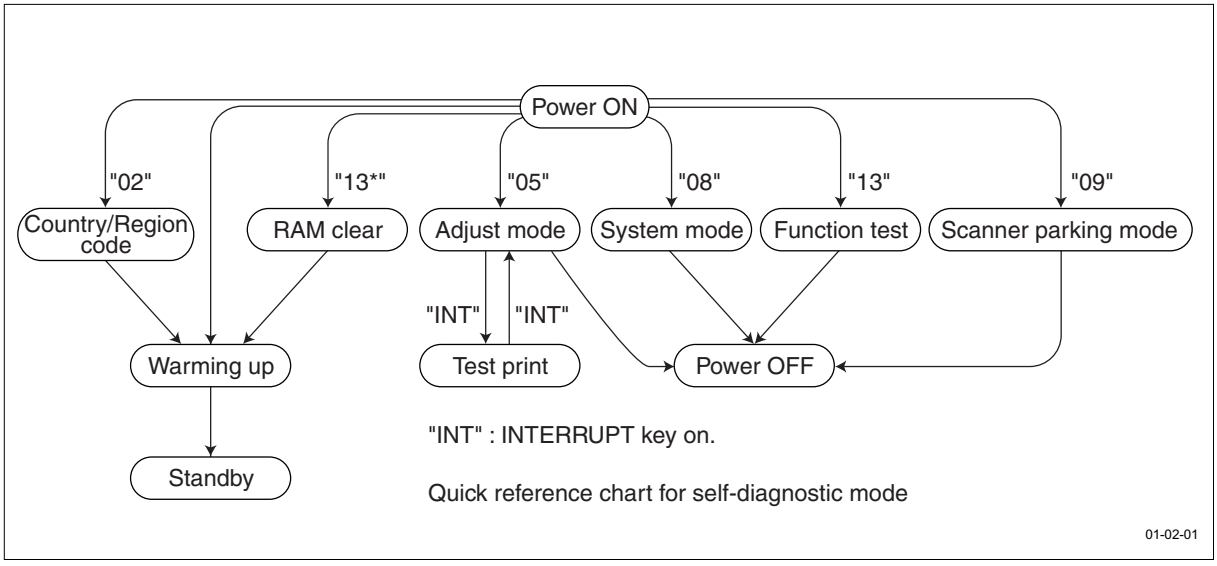

Note: Power ON — Turn on the power switch.
Power OFF — Turn on the power switch.
INT — Press the INTERRUPT key.
C/S — Press the CLEAR/STOP key.

Menu map

The menu below can be selected by pressing the program key. (However, the menu in the broken-dotted box are displayed only when the copier enters the SERVICE MODE.)

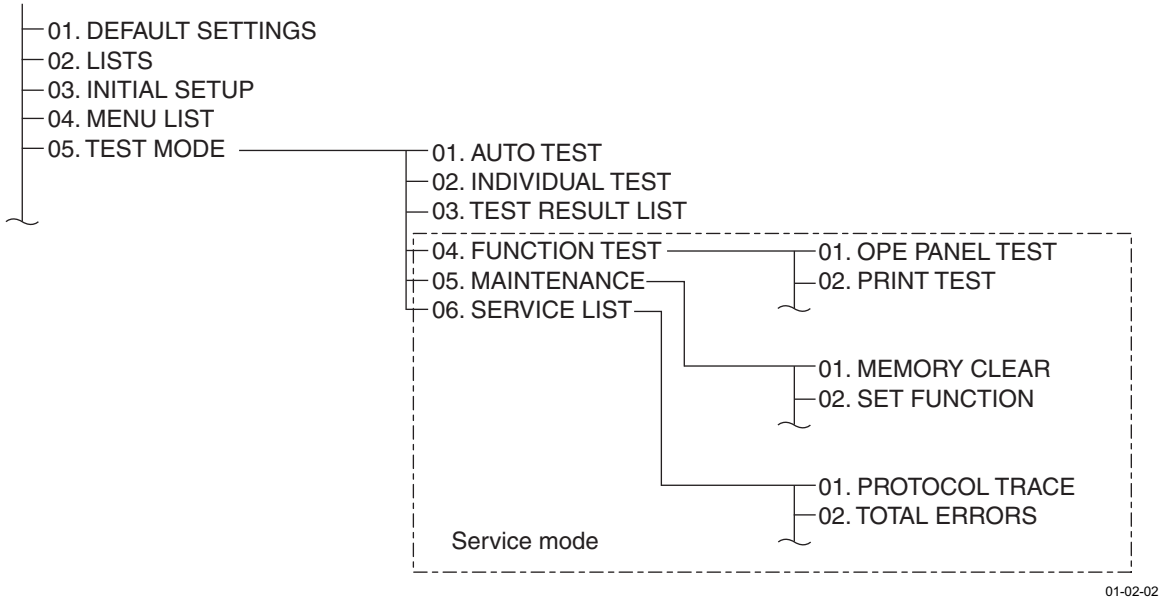

1.2.1 Adjust mode (05)

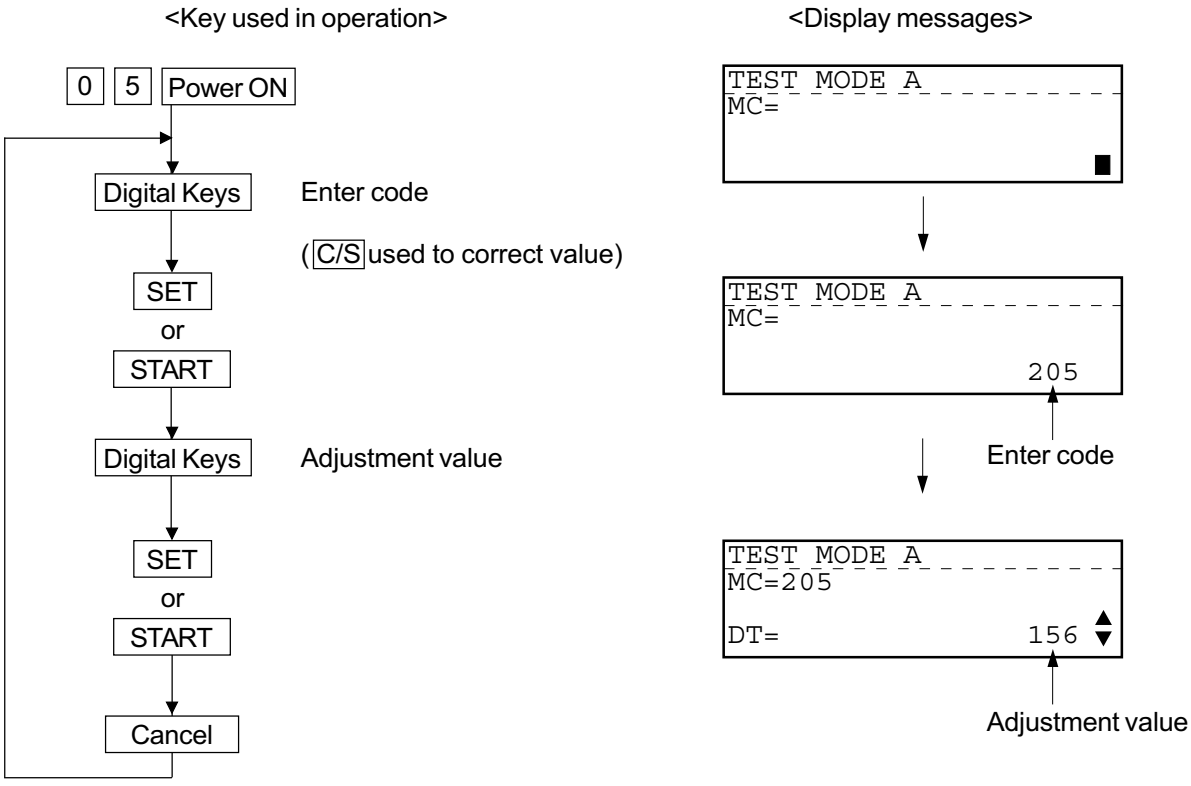

ADJUST MODE (05) ITEMS

Process unit adjustment

Code	Factor	Adjustment item (05)	Mode	Default	Acceptable value	Refer to page
205	Development	Developer bias DC adjustment • Increment/decrement by U/D (Up/Down) key • Real-time high voltage output • Developer bias DC ON	ALL	156 (166)	0-255	1-70
210	Charging	Grid voltage initial value adjustment • Increment/decrement by U/D key • Real-time high voltage output (Charge ON)	ALL	104 (118) *1	0-255 Guaranteed value 0-223	1-70
220	Transfer	Transfer transformer DC output High adjustment • Increment/decrement by U/D key • Real-time high voltage output (Transfer High ON)	ALL	180	0-255	1-70
221	Transfer	Transfer transformer DC output Center adjustment • Increment/decrement by U/D key • Real-time high voltage output (Transfer Center ON)	ALL	142 (155) *1	0-255	1-70
233	Separation	Separation output High adjustment • Increment/decrement by U/D key • Real-time high voltage output (Separation-High ON)	ALL	67	0-255	1-70
234	Separation	Separation output Center adjustment • Increment/decrement by U/D key • Real-time high voltage output (Separation-Center ON)	ALL	49	0-255	1-70
235	Separation	Separation output Low adjustment • Increment/decrement by U/D key • Real-time high voltage output (Separation-Low ON)	ALL	35	0-255	1-70
261	Laser	Laser power 600 DPI Initial value adjustment • Increment/decrement by U/D key • No polygon rotation • Real-time laser output (Results of automatic laser adjustment) (Laser ON)	ALL	39 (53) *1	0-255	

*1 : The value in parentheses is for the model e-STUDIO200/250 series.

Scanning adjustment

Code	Factor	Adjustment item (05)	Mode	Default	Acceptable value	Refer to page
304	Scanner mechanism	Scanner feed magnification 0.1 %/step	ALL	128	0-255	1-62
305	Scanner mechanism	Scanner feed misalignment 0.126 mm/step (600 DPI)	ALL	128	85-171	1-63
306	Scanner mechanism	CCD scanning misalignment 0.04233 mm/step	ALL	128	5-251	1-61
354	R/ADF	R/ADF aligning amount (surface) 0.5 mm/step	ALL	10	0-20	
355	RADF	RADF aligning amount (back) 0.5 mm/step	ALL	10	0-20	
356	R/ADF	ADF position sensor adjustment or RADF sensor automatic adjustment	ALL	-	*1	
357	R/ADF	R/ADF transport speed fine adjustment 0.1 %/step	ALL	50	0-100	
358	R/ADF	R/ADF horizontal misalignment adjustment 0.04233 mm/step	ALL	128	0-255	
365	R/ADF	RADF top position adjustment (surface) 0.1 mm/step	ALL	50	0-100	
366	RADF	RADF top position adjustment (back) 0.1 mm/step	ALL	50	0-100	
380	ADF	ADF document width sensor adjustment, narrowest document guide width	ALL	-	*1	1-52
381	ADF	ADF document width sensor adjustment, widest document guide width	ALL	-	*1	1-52

*1 : The entry of code enables automatic adjustment.

Printer adjustment

Code	Factor	Adjustment item	Mode	Default	Acceptable Value	Refer to page
400	Printer system	Polygon motor speed fine adjustment 600 DPI 0.2%/step	PPC	128	108-148	1-56
410	Printer system	Laser start position 600 DPI Cassette 1	PPC	108	0-255	1-57
417	Printer system	Laser start position 600 DPI Cassette 2	PPC	106	0-255	1-57
418	Printer system	Laser start position 600 DPI Cassette 3/LCF	PPC	119	0-255	1-57
419	Printer system	Laser start position 600 DPI Cassette 4	PPC	128	0-255	1-57
421	Printer system	Main motor speed fine adjustment Approx. 0.1%/step	PPC	124 (130)	78-178	1-58
430	Printer system	Top margin 0.7 mm/step	PPC	0	0-30	1-64
431	Printer system	Left margin 0.1 mm/step	PPC	0	0-255	1-64
432	Printer system	Right margin 0.1 mm/step	PPC	0	0-255	1-65
433	Printer system	Bottom margin 0.1 mm/step	PPC	0	0-255	1-65
440	Printer system	Top position Cassette 1 0.4 mm/step	ALL	23	0-40	1-59
441	Printer system	Top position Cassette 2 0.4 mm/step	ALL	7	0-15	1-59
442	Printer system	Top position Bypass (SFB) 0.4 mm/step	ALL	8	0-15	1-59
443	Printer system	Top position LCF 0.4 mm/step	ALL	8	0-15	1-59
444	Printer system	Top position PFP 0.4 mm/step	ALL	7	0-15	1-59
445	Printer system	Top position ADU 0.4 mm/step	ALL	8	0-15	1-59
450	Printer system	Aligning amount Copier cassette (Cassette 1) Long size (0.52 mm/step) Paper length of min. 259 mm	ALL	14	0-31	1-55
451	Printer system	Aligning amount Copier cassette (Cassette 1) Short size (0.52 mm/step) Paper length of max. 258 mm	ALL	14	0-31	1-55
452	Printer system	Aligning amount Cassette 2 (PFU) Long size (0.52 mm/step) Paper length of min. 322 mm	ALL	22	0-31	1-55

*1 : The value in parentheses is for the model e-STUDIO200/250 series.

Printer adjustment

Code	Factor	Adjustment item	Mode	Default	Acceptable Value	Refer to page
453	Printer system	Aligning amount Cassette 2 (PFU) Short size (0.52 mm/step) Paper length of max. 321 mm	ALL	16	0-31	1-55
455	Printer system	Aligning amount ADU (e-STUDIO160: 0.7 mm/step, e-STUDIO200/250: 0.47 mm/step)	ALL	26 (23) *1	0-31	1-55
456	Printer system	Aligning amount PFP Short size (0.52 mm/step) Paper length of max. 321 mm	ALL	16	0-31	1-55
457	Printer system	Aligning amount LCF 0.52 mm/step	ALL	16	0-31	1-55
458	Printer system	Aligning amount Bypass (SFB) Short size (0.52 mm/step) Paper length of max. 258 mm	ALL	21	0-31	1-55
463	Printer system	Aligning amount PFP Long size (0.52 mm/step) Paper length of min. 322 mm	ALL	18	0-31	1-55
465	Printer system	Aligning amount Bypass Long size (0.52 m/step) Paper length of min. 259 mm	ALL	28	0-31	1-55
497	Printer system	Laser start position 600 DPI Bypass	PPC	101	0-255	1-57

*1 : The value in parentheses is for the model e-STUDIO200/250 series.

Scan image processing parameter 600 DPI

Code	Factor	Adjustment item	Image mode	Image quality mode	Default	Acceptable value *1	Refer to page
501	Density	Manual density fine adjustment Center value	PPC	Photo	139	0-255 L ← V → D	1-53
503	Density	Ditto	PPC	Text/Photo	133	0-255 L ← V → D	1-53
504	Density	Ditto	PPC	Text	130	0-255 L ← V → D	1-53
505	Density	Manual density fine adjustment Light step value	PPC	Text/Photo	28	0-255 V → L	1-53
506	Density	Ditto	PPC	Photo	18	0-255 V → L	1-53
507	Density	Ditto	PPC	Text	20	0-255 V → L	1-53
508	Density	Manual density fine adjustment Dark step value	PPC	Text/Photo	13	0-255 V → D	1-53
509	Density	Ditto	PPC	Photo	20	0-255 V → D	1-53
510	Density	Ditto	PPC	Text	18	0-255 V → D	1-53
512	Density	Auto density fine adjustment	PPC	Photo	140	0-255 L ← V → D	1-53
514	Density	Ditto	PPC	Text/Photo	133	0-255 L ← V → D	1-53
515	Density	Ditto	PPC	Text	130	0-255 L ← V → D	1-53
593	Density	ϒ data inclination correction	PPC	Text/Photo	0	0-9	1-67
594	Density	ϒ data inclination correction	PPC	Photo	0	0-9	1-67
595	Density	ϒ data inclination correction	PPC	Text	0	0-9	1-67

*1 L: Light, V: Value, D: Dark

Scan image processing parameter 600 DPI

Code	Factor	Adjustment item	Image mode	Image quality mode	Default	Acceptable value *1	Refer to page
620	Image quality	No. of units: HPF table number 0: Use of default value 1: Text/Photo mode 2: Photo mode 3: For Text mode 4 - 9: Unused No. of tens: Filter combination intensity 0: Use of default value 1 - 9: Filter combination intensity	PPC	Text/Photo	1	0-99 The larger the intensity coefficient the stronger the intensity.	1-66
621	Image quality	Ditto	PPC	Photo	2	0-99	1-66
622	Image quality	Ditto	PPC	Text	3	0-99	1-66
693	Density	Range correction on original set on the ADF or RADF. Set whether the value of the background peak and text peak are fixed or not. If they are fixed, the range correction is performed with standard values. The values of the background peak and text peak affect the reproduction of the background density and text density respectively. The number of units: Data while automatic density is selected. The number of tens: Data while manual density is selected. Background peak / Text peak 1: fixed / fixed 2: varied / fixed	PPC	Text/Photo	12	11-14 21-24 31-34 41-44	
694		3: fixed / varied		Photo	12		
695		4: varied / varied		Text	44		

1.2.2 System mode

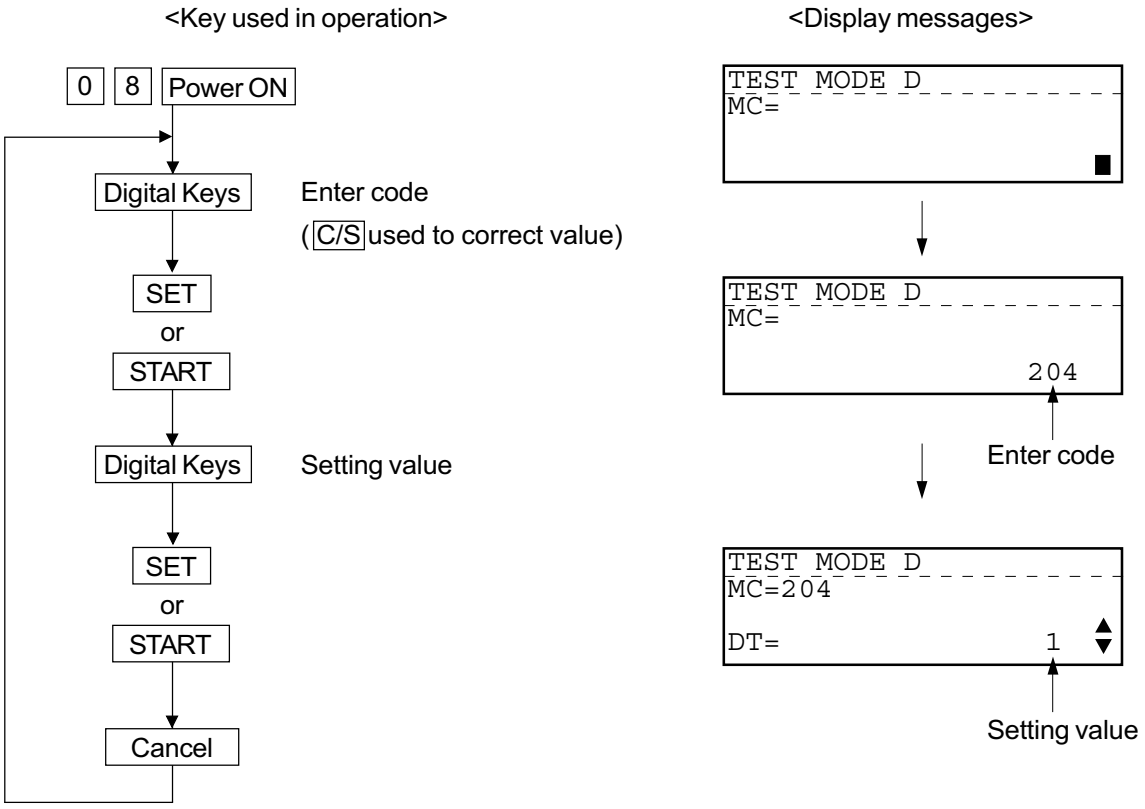

SYSTEM MODE (08) ITEMS

Code	Factor	Setting item	Mode	Image quality mode	Default	Acceptable value *1	Refer to page
202	SYS	Selection of external counter 0: No external counter 1: With coil controller 2: Non-standard: With copylizer/key card 3: With key counter	ALL		0	0-3	
204	SYS	Auto clear [sec] 0: Invalid 1: 15s 2: 30s 3: 45s 4: 60s 5: 75s 6: 90s 7: 105s 8: 120s 9: 135s 10: 150s 11: 180s 12: 210s 13: 240s 14: 270s 15: 300s	ALL		3	0-15	
205	SYS	Auto low power 0: Invalid 1: Valid (Time is set on panel.)	ALL		1	0-1	
206	SYS	Auto sleep 0: Invalid 1: Valid (Time is set on panel.)	ALL		1	0-1	
207	SYS	Display for key counter setting 0: Set key copy counter 1: ASK CASHIER TO SWITCH ON * Valid when 08-202 is set to 3 (With key counter).	ALL		0	0-1	

*1 : The entry of code enables automatic execution.

SYSTEM MODE (08) ITEMS

Code	Factor	Setting item	Mode	Image quality mode	Default	Acceptable value *1	Refer to page
224	SYS	SFB paper size 0: A3 (8K) 1: A4 (16K) 2: A4R (16KR) 3: A5R 4: B4 5: B5 6: B5R 7: LETTER 8: LETTER-R 9: LEDGER 10: LEGAL 11: STATEMENT-R 12: COMPUTER 13: FOLIO 14: Undefined 15-17: Reserved			14	0-14	
225	SYS	Copier cassette paper size 0: A3 (8K) 1: A4 (16K) 2: A4R (16KR) 3: A5R 4: B4 5: B5 6: B5R 7: LETTER 8: LETTER-R 9: LEDGER 10: LEGAL 11: STATEMENT-R 12: COMPUTER 13: FOLIO 14: Reserved 15: Reserved			NAD: 7 Other: 1	0-13	
226	SYS	Cassette 2 paper size (Same as 08-225)			NAD: 7 Other: 1	0-13	
227	SYS	Cassette 3 paper size (Same as 08-225) (e-STUDIO200/250 series)			NAD: 7 Other: 1	0-13	
228	SYS	Cassette 4 paper size (Same as 08-225) (e-STUDIO200/250 series)			NAD: 7 Other: 1	0-13	
246	SYS	Clearing copy jobs at auto clear 0: No clearing 1: Clearing	ALL		0	0-1	
250	MAINT	Service personnel telephone number	ALL			20 digits Own M/C registration area	
251	MAINT	PM counter setting value	ALL		NAD: e-STUDIO160/200: 81000 e-STUDIO250: 99000 Othre: 0	0-999999	
252	MAINT	PM counter present value 08-251: Operates when other than 0 Object of 08-352	ALL		0	0-999999	
255	MAINT	PFP installation status 0: Auto (Automatically changed to 1 or 2 by observing the PFC cassette installation status.) 1: PFP (Cassette 3) 2: PFP (Cassette 3,4) (e-STUDIO200/250 series) 3: Reserved 4: None	ALL		0	0-4	
256	MAINT	LCF paper size 0: A4 1: LT 2: Reserved	ALL		NAD: 1 Other: 0	0-2	
300	OPE.	MAX . 9 0: 999 1: 99 2: 9	ALL		0	0-2	
340	MAINT	Drum end counter setting value.	ALL		e-STUDIO160/200: 27000 e-STUDIO250: 33000	0-99999 (0: Not displayed)	
351	COUNT	Display of total counter data (Confirmed by listing and changed by memory writing)	ALL			Display only	
352	COUNT	A3/LD double count 0: Single count 1: Double count	ALL		1	0-1	
355	COUNT	Display of drum lite counter	ALL		0	Display only	
374	COUNT	ADF/RADF scan counter	ALL			0-999999	

*1 : The entry of code enables automatic execution.

Code	Factor	Setting item	Mode	Image quality mode	Default	Acceptable value *1	Refer to page
375	COUNT	COPY job (print) counter	ALL			Double counted if printing A3 or LD size paper	
376	COUNT	PRINTER job (print) counter	ALL			Double counted if printing A3 or LD size paper	
377	COUNT	FAX job (print) counter	ALL			Double counted if printing A3 or LD size paper	
385	COUNT	Total counter in scanner unit (display)	ALL			0-999999	
386	COUNT	Platen scan count	ALL			0-999999	
388	COUNT	LOAD instruction for total counter when replacing the main PWA Scanner unit → Copier	ALL			*1	1-90
389	COUNT	SAVE instruction for total counter when replacing the scanner unit Copier → Scanner unit	ALL			*1	
400	Process	Thermistor heater status counter 0: No error occurrence 1: C41 1st thermistor or heater error when starting W-UP 2: C41 2nd thermistor or heater error when starting W-UP 3: Reserved 4: C43 Thermistor error during W-UP 5: C44 Heater error during W-UP 6: C43 Thermistor error after ready 7: C44 Heater error after ready 8: C45 Heater end thermistor error after ready (High temperature) 9: C44 High temperature heater error 10: C45 Heater end thermistor error after ready (Low temperature)	ALL		0	0-10	
401	Process	Drum life counter			0	0-999999	
402	Process	Power on hours counter (7-digit display: Hour 5-digit, minute 2-digit) Total power ON hours			0	0-9999959 Counter area added	
403	Process	Fuser counter Always double count for A3, B4, LD, LG, COM, A4R, LTR, and FOLIO			0	0-999999 Counter area added	
404	Process	Developer material counter. Always double count for A3, B4, LD, LG, COM, A4R, LTR, and FOLIO. Clear by installing a new PU.			0	0-999999 Counter area added	
406	Process	Pre-run start time 0: Invalid 1: 30 sec 2: 35 sec 3: 40 sec 4: 45 sec 5: 50 sec 6: 55 sec 7: 60 sec	ALL		0	0-7	
407	Process	Pre-run operation time 0: Invalid 1: 5 sec 2: 10 sec 3: 15 sec 4: 20 sec 5: 25 sec 6: 30 sec 7: 40 sec 8: 50 sec 9: 60 sec 10: 150 sec	ALL		0 (2) *1	0-10	
408	Process	Pre-run operation time for thick paper 0: Invalid 1: 1 sec 2: 2 sec 3: 3 sec 4: 4 sec 5: 5 sec 6: 6 sec 7: 7 sec 8: 8 sec 9: 9 sec 10: 10 sec 11: 12 sec 12: 14 sec 13: 16 sec 14: 18 sec 15: 20 sec	ALL		10	0-15	

*1 : The entry of code enables automatic execution.

Code	Factor	Setting item	Mode	Image quality mode	Default	Acceptable value *1	Refer to page
410	Process	Fixing temperature when printing 4: 170°C 5: 175°C 6: 180°C 7: 185°C 8: 190°C 9: 195°C 10: 200°C 11: 205°C 12: 210°C 13: 215°C	ALL		8 (10) *1	4-13	
411	Process	Fixing temperature when ready 0: 170°C 1: 175°C 2: 180°C 3: 185°C 4: 190°C 5: 195°C 6: 200°C 7: Drop control ON	ALL		7	0-7	
412	Process	Fixing temperature in low power state 0: OFF 1: 120°C 2: 130°C 3: 140°C 4: 150°C 5: 160°C	ALL		NAD: 5 Other: 4 (NAD: 3) (Other: 2) *1	0-5	
413	Process	Fixing temperature for thick paper 0: Invalid 1: 195°C 2: 200°C 3: 205°C 4: 210°C	ALL		0 (2) *1	0-4	
446 *2	Process	Correction for transfer output ON timing. (0: -110 ms -----18: +70 ms)	ALL		11	0-18 10 ms/step	1-91
447 *2	Process	Correction for transfer output OFF timing. (0: +110 ms -----18: -70 ms)	ALL		1 (11) *1	0-18 10 ms/step	1-91
462		Setting for switchback operation to copy mixed-size originals form RADF 0: Invalid 1: Valid			0	0-1	
480	PRINT	Cassette priority selection 0: A4/LT 1: LCF 2: Cassette 1 3: Cassette 2 4: Cassette 3 5: Cassette 4	ALL		0	0-5	
481	PRINT	Auto cassette change 0: None 1: Normal	ALL		1	0-1	
483	PRINT	Polygon motor preceding start-up setting 0: Valid (DF, platen) 1: Invalid 2: DF only	ALL		0	0-2	
486	PRINT	Time for suspension of the Polygonal motor pre-running (0: 15 sec, 1: 30 sec, 2: 45 sec)	ALL		0	0-2	
503	Image processing	Density default in image quality mode 0: AUTO 1: Light 3 2: Light 2 3: Light 1 4: Center 5: Dark 1 6: Dark 2 7: Dark 3 Also reflected on panel.	PPC	ALL	0	0-8	
504	F/W	Special paper selection 0: FOLIO/B size 1: 13" LEGAL (South America only) 2: K size (China only)	PPC		0	0-2	
550	Image processing	Image mode default 0: Standard 1: Photo 2: Text	PPC	ALL	0	0-2	
603	F/W	Auto duplex mode (when document is loaded into DF) 0: Invalid 1: Simplex/Duplex 2: Duplex/Duplex	PPC		0	0-2	
604	F/W	APS priority selection 0: APS 1: AMS 2: None (100%) 3: Reserved	PPC		0	0-3	
611	F/W	Book duplex document selection 0: Left-hand open 1: Right-hand open	PPC		0	0-1	
614	F/W	The function clear LED blinks. Blinks when the value is different from the present default value after copying (until auto clear or all clear.) 0: Invalid (Always off) 1: Valid	PPC		1	0-1	

*1 : The value in parentheses is for the model e-STUDIO200/250 series.
*2 : This value should be adjusted at the factory. Do not change the value in the field. When the main PWA is replaced, it should be entered again.

Code	Factor	Setting item	Mode	Image quality mode	Default	Acceptable value *1	Refer to page
618	F/W	Default setting for mixed size originals 0: OFF 1: ON * Setting 08-618 to 1 (ON) and 08-641 to 4 (alternate) simultaneously is not allowed.	PPC		0	0-1	
620	F/W	APS forced start (Exclude RADF) 0: Valid (One time pressing) 1: Reserved 2: Invalid	Memory PPC		0	0-2	
635		Process for last page (one-sided original) at duplex copying 0: One-side copy 1: Double-sided copy (blank paper is added to as the last even numbered page to output the copy in the same orientation with previous pages.)	PPC		0	0-1	
641	F/W	Auto sort mode (when document is loaded into DF) Also set on panel. 0: Invalid 1: Staple 2: Sort 3: Invalid 4: Vertical and horizon. alternate 5: Sort offset * Setting 08-641 to 4 (alternate) and 08-618 to 1 (ON) simultaneously is not allowed.	PPC		2	0-5	
642	F/W	Sorter mode priority selection (at all clear) Also set on panel. 0: NON SORT 1: STAPLE 2: SORT 3: Reseved 4: ALTERNATION 5: SORT OFFSET 6: NON SORT OFFSET	PPC		0	0-6	
648	F/W	Initialization of finisher bin at all clear 0: Valid 1: Invalid	ALL		0	0, 1	
649	F/W	Magazine sort setting 0: Left-hand open 1: Right-hand open	Expansion PPC		0	0-1	
650	F/W	2in1/4in1 setting 0: Horizontal write 1: Vertical write	Expansion PPC		0	0-1	
652	F/W	Cascade operation setting (e-STUDIO200/250 series) 0: No cascade 1: 1 → 2 (Endless stack included) 2. Reserved	Expansion PPC		1	0-2	
665	F/W	Set PPC area default. 05: Adjust area, γ adjust store area 08: Setting (PPC-FUNC) area (Except the counter values)	Self-check			*1	1-90
673		Resetting drum-related counters, 08-355, 08-401. (Valid when 08-689 is set to 1.)	Self-check				
685		Paper feeding by turns at duplex copying 0: Invalid 1: Valid	PPC		1	0-1	
688		UI shortcut key 0: Invalid 1: Valid (REDUCE/ENLARGE and ZOOM UP/DOWN only) 2: Valid (Cassette paper size setting only) 3: Valid (All, REDUCE/ENLARGE, ZOOM UP/DOWN, and cassette paper size setting)	PPC		1	0-4	

*1 : The entry of code enables automatic execution.

1.2.3 User test mode

When you press the PROGRAM key and enter the TEST mode from the menu, the items that can be tested by the user are displayed.

(1) AUTO TEST

This mode allows the user to independently diagnose the machine by automatically performing a series of tests.

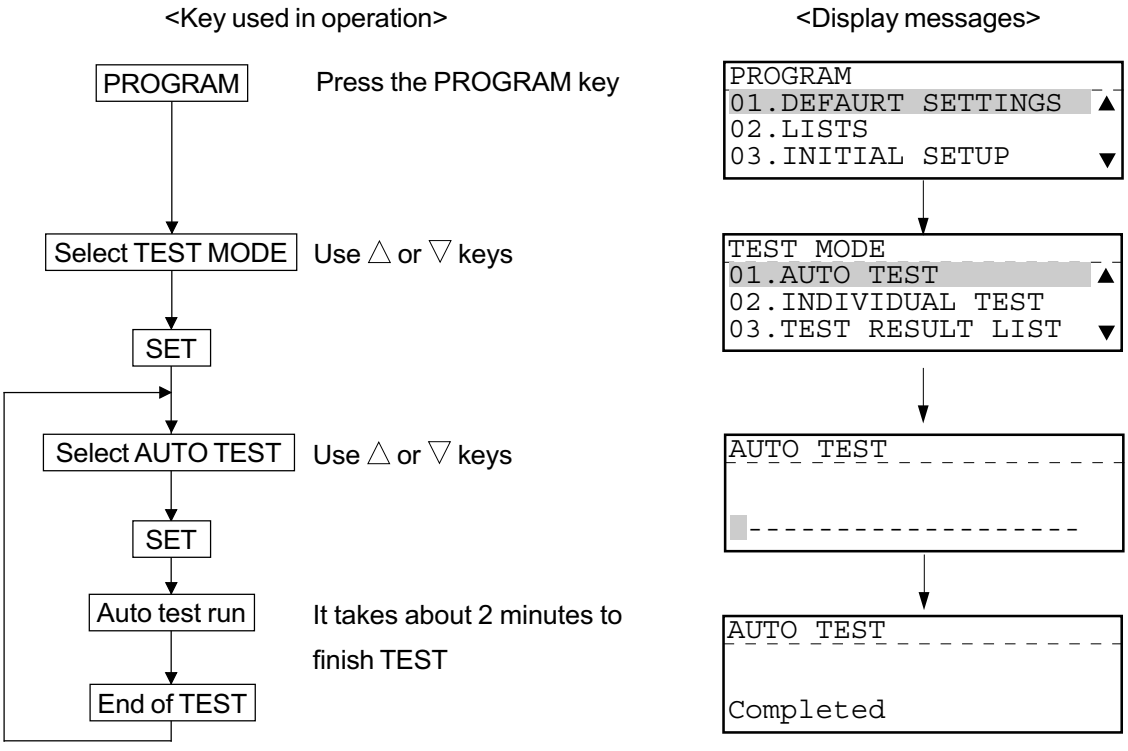

Test Items

a) Flash ROM test	Calculates and compares the check sums of the firmware, function data and language information with the previously stored corresponding check sum values.
b) SRAM test	Same as Function Test.
c) DRAM test	Same as Function Test.
d) MODEM test	Same as Function Test.
e) SCANNER test	Same as Function Test.
f) CODEC test	Same as Function Test.
g) Printer test	Checks each part of the printer (fan, HVPS, polygon, heater, LSU) and prints one page of test pattern (not performed when there is no paper).
h) Phonebook data test	Calculates and compares the check sum of the phonebook with the previously stored check sum value.
i) Network board test (with GF-1110)	

(2) INDIVIDUAL TEST

The user can perform a test in interactive mode and locate the faulty point from the test result. The test result is printed in the form of a report.

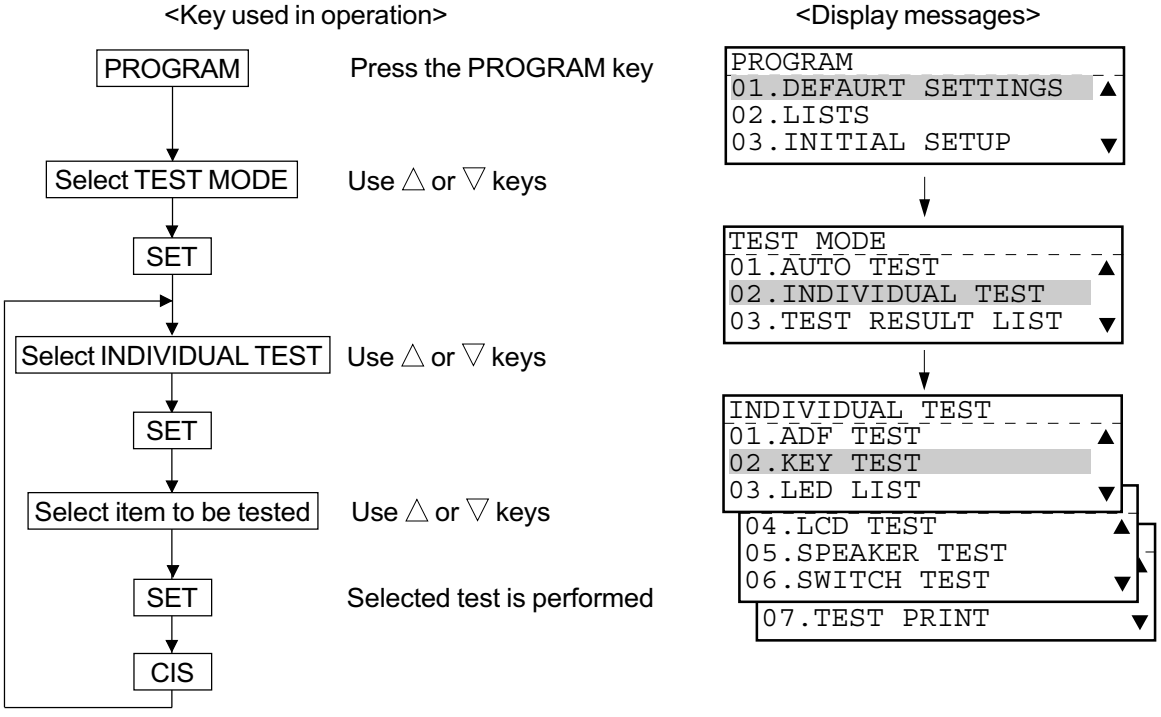

Test Items

a) ADF test — Transports and ejects originals to check the transport system. Transports and ejects a certain number of originals and displays the number of the originals. The tester checks that this value matches the number of the originals. A transport speed can be selected with the resolution key.

b) Key test — Press all the keys on the operation panel to check if they are detected normally. The key test ends when the STOP key is pressed in the end. If there is any key which is not detected when pressed before the STOP key is pressed, it will be judged to be an error.

c) LED test — When the test is performed, all the LEDs will come on. If there is any LED which is not lit when visually checked, it will be judged to be an error.

d) LCD test — All the dots on the display go off (turn black). When the Start key is then pressed, all the dots light (turn white). If there is any dot which does not light or go off when visually checked, it will be judged to be an error.

e) Speaker test — Check that the volume level from the speaker changes.

f) Sensor test — Sensor test.
Open and close the covers by following the guidance appearing on the display.

g) Printer test — Checks the printer function by printing two test patterns.

(3) TEST RESULT LIST

Prints the results of (1) AUTO TEST and (2) INDIVIDUAL TEST.

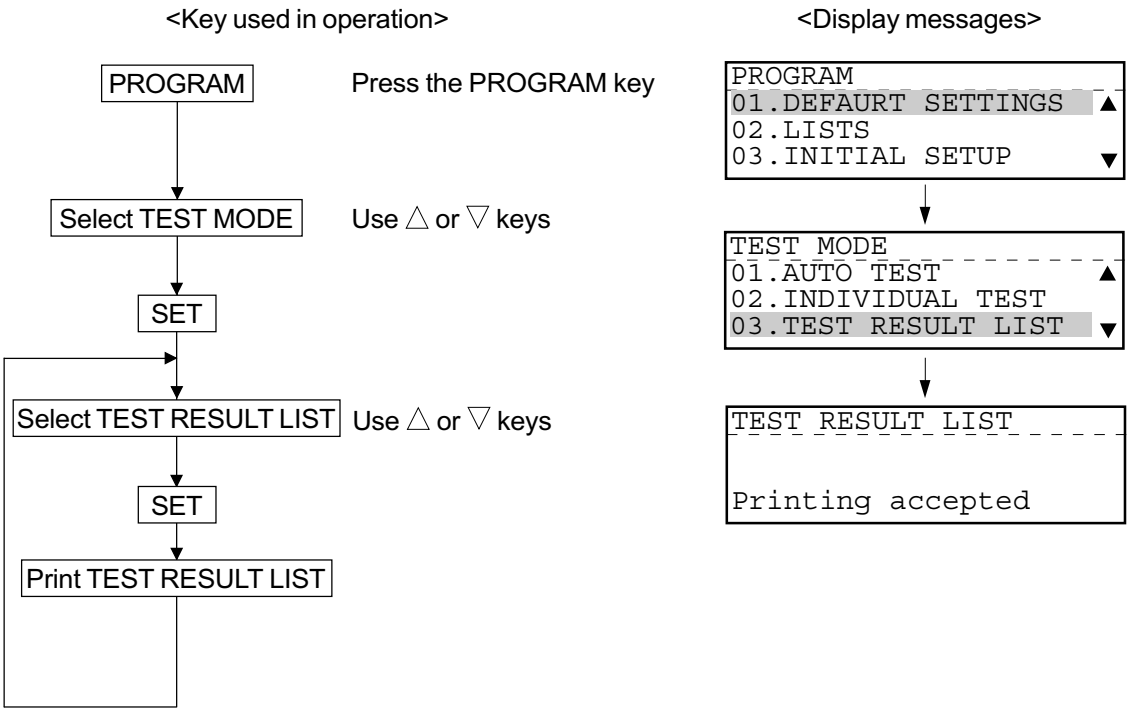

If there is any NG in the RESULT column, the corresponding test is problematic. An test with an asterisk (*) cannot be executed unless the corresponding option is installed.

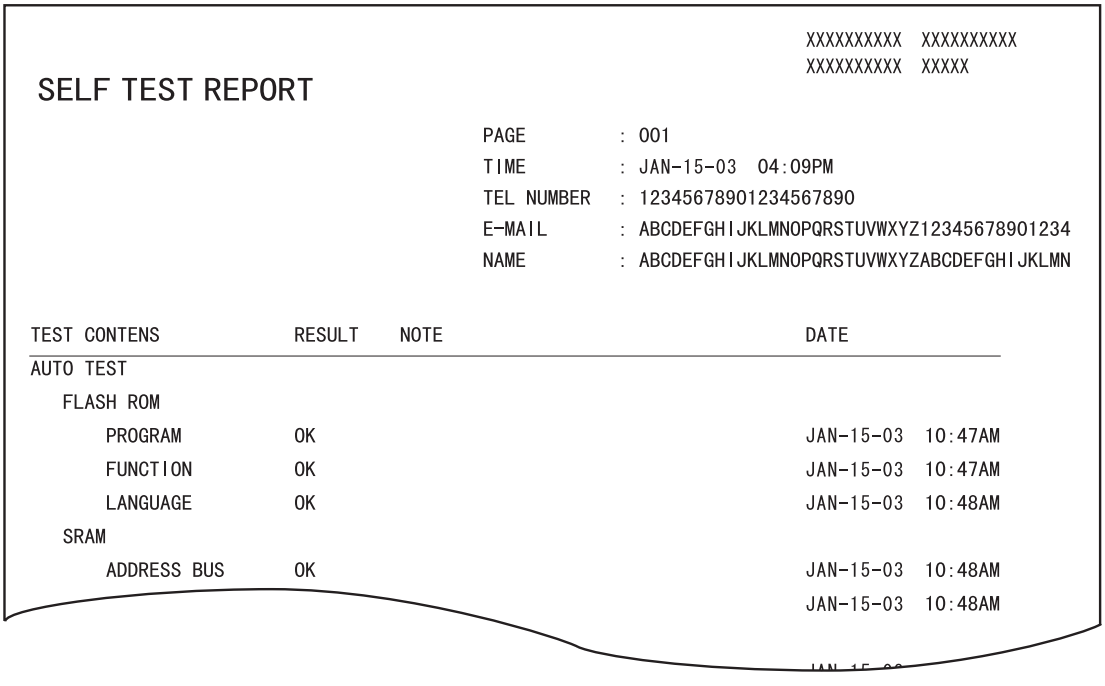

XXXXXXXXXX XXXXXXXXXX
XXXXXXXXXX XXXXX

SELF TEST REPORT

PAGE : 001
TIME : JAN-15-03 04:09PM
TEL NUMBER : 12345678901234567890
E-MAIL : ABCDEFGHIJKLMNOPQRSTUVWXYZ12345678901234
NAME : ABCDEFGHIJKLMNOPQRSTUVWXYZABCDEFGHIJKLMN

TEST CONTENS	RESULT	NOTE	DATE
AUTO TEST			
FLASH ROM			
PROGRAM	OK		JAN-15-03 10:47AM
FUNCTION	OK		JAN-15-03 10:47AM
LANGUAGE	OK		JAN-15-03 10:48AM
SRAM			
ADDRESS BUS	OK		JAN-15-03 10:48AM
			JAN-15-03 10:48AM

1.2.4 Function test

The function test checks each function of the copier. To enter the function test mode, follow the procedure below, or enter the Service mode (*,#,*,*) and select the menu for the function test

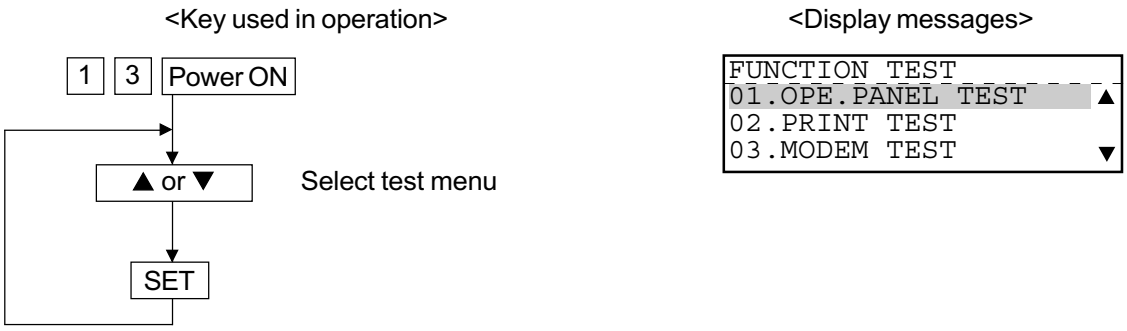

The following tests can be conducted in the Function test mode.

01. OPE. PANEL TEST
02. PRINT TEST
03. MODEM TEST *1 (Factory test)
04. SENSOR TEST
05. SRAM TEST
06. DRAM TEST
07. CLOCK IC TEST
08. SCANNER TEST
09. CODEC TEST
10. OUTPUT TEST
11. PRINTER BOARD TEST *2

*1: When the FAX kit (GD-1061) is not installed, the test is not present.

*2: When the PCL kit (GA-1031) is not installed, the test is not present.

(1) 01. OPE PANEL TEST

This test checks the control panel display. When any key other than START and CLEAR/STOP is pressed during the display test, O and X are displayed alternately in the lower right of the display.

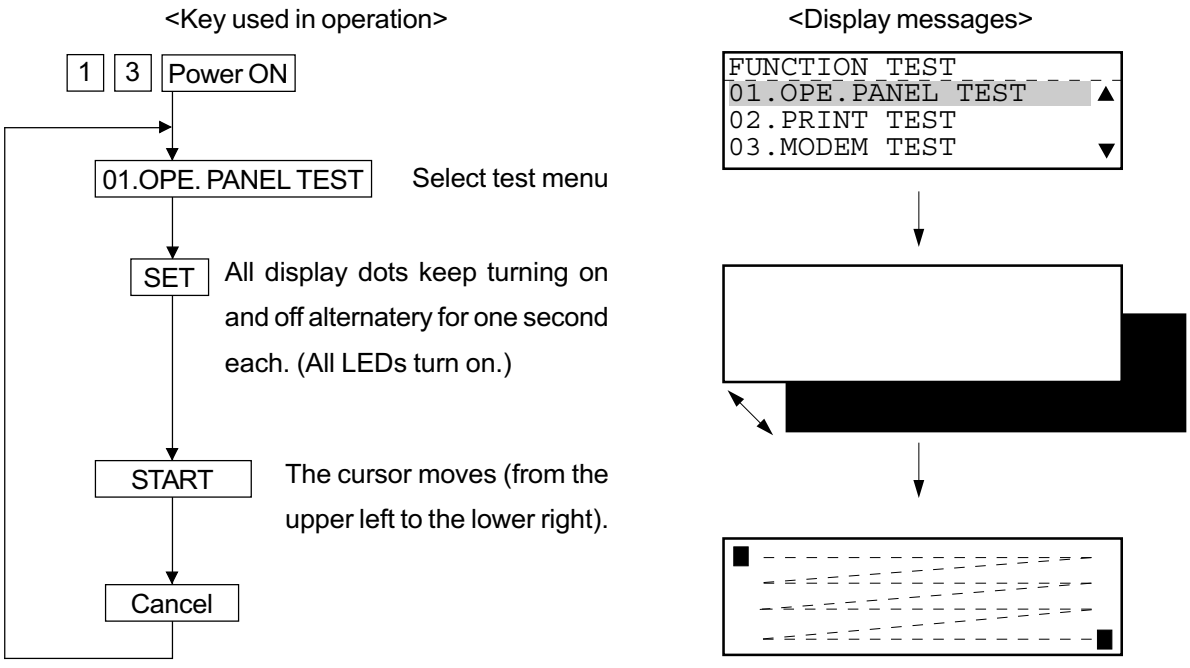

(2) 02. PRINT TEST

The test pattern is printed when a number is entered according to the displayed instructions

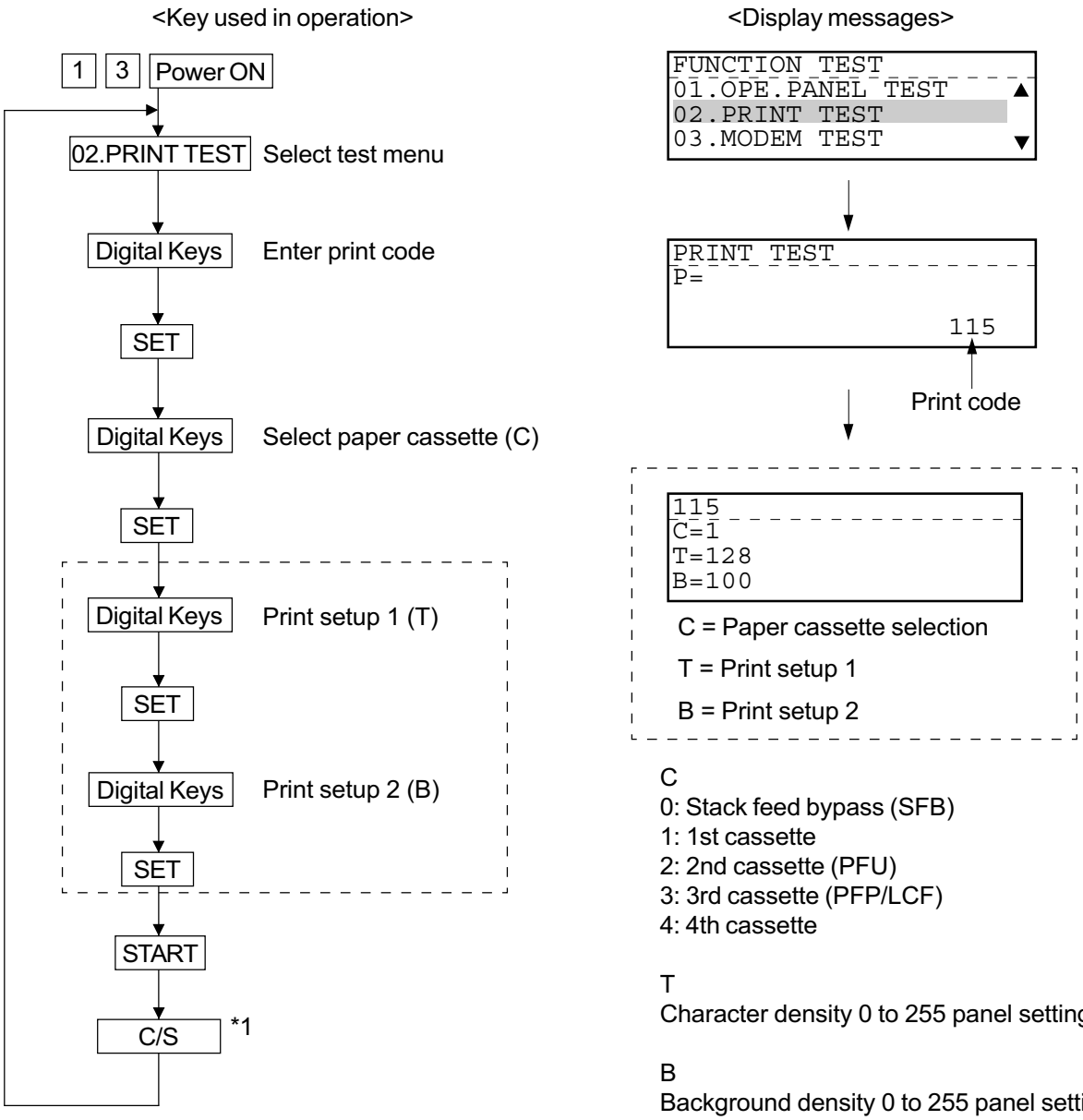

C
0: Stack feed bypass (SFB)
1: 1st cassette
2: 2nd cassette (PFU)
3: 3rd cassette (PFP/LCF)
4: 4th cassette

T
Character density 0 to 255 panel setting.

B
Background density 0 to 255 panel setting.

Some codes do not have T or B.

*1: Be sure to press this key after printing starts.
(If this key is not pressed, the copier keeps printing)

TEST PRINT (02) ITEMS

Code	Factor	Test pattern item	Item to be confirmed
109	Electrical	All-surface halftone (latter part) Error diffusion Halftone density 0 to 255 panel setting	All completely black at T=0. All completely white at T=255.
110	Electrical	Scanning 256 levels (latter part) Error diffusion	The density should change smoothly between black and white.
111	Image processing	Scanning 33 levels (latter part) Error diffusion	There should be 33 levels in a transition between black and white.
112	Electrical	Scanning 17 levels (latter part) Error diffusion	There should be 17 levels in a transition between black and white.
113	Image processing	Feed 33 levels (latter part) Error diffusion	There should be 33 levels in a transition between black and white.
114	Electrical	Feed 17 levels (latter part) Error diffusion	There should be 17 level in a transition between black and white.
115	Electrical	Scanning 1 dot line (latter part) 2-level Character density 0 to 255 panel setting Background density 0 to 255 panel setting	Black when both T and B are 0. White when both T and B are 255.
116	Electrical	Scanning 24 dot line (latter part) 2-level Character density 0 to 255 panel setting Background density 0 to 255 panel setting	Black when both T and B are 0. White when both T and B are 255.
121	Image processing	All-surface halftone (foregoing part) Error diffusion	All completely gray.
122	Image processing	Scanning 256 levels (foregoing part) Error diffusion	The density should change smoothly between black and white.
123	Image processing	Scanning 33 levels (foregoing part) Error diffusion	There should be 33 levels in a transition between black and white.
124	Image processing	Scanning 16 levels (foregoing part) Error diffusion	There should be 16 levels in a transition between black and white.
135	Image processing	All-surface horizontal 1 dot line, horizontal 1 dot space	
136	Image processing	All-surface vertical 1 dot line, vertical 1 dots pace	
137	Image processing	All-surface horizontal 2 dot line, horizontal 2 dot space	
138	Image processing	All-surface vertical 2 dot line, vertical 2 dot space	
141	Image processing	1 dot grid pattern (10 mm pitch)	Grid of 10 by 10 mm square. The line width increases as the code increases (141→142→145→146). Test 142 is used for 1.4 Adjustment.
142	Image processing	2 dot grid pattern (10 mm pitch)	
145	Image processing	Grid pattern of 4 sets of 1 dot line, horizontal 2 dots space (10 mm pitch)	
146	Image processing	Grid pattern of 4 sets of 2 dot line, horizontal 2 dots space (10 mm pitch)	
149	Image processing	A3 all completely black	All completely black
150	Image processing	A3 all white	All completely white
151	Image processing	Rightward rising slant line 1 dot (5 mm pitch)	The line interval in the main scanning direction should be 5 mm. The line should be straight.

(3) 03. MODEM TEST (Factory test)

Refer to the Service Handbook (GD-1061).

(4) 04. SENSOR TEST

When the machine enters the SENSOR TEST Mode, the status of each sensor is indicated on the display.
The status can be checked by selecting the corresponding bit.
(For items to be checked, refer to the Sensor Test Items table.)

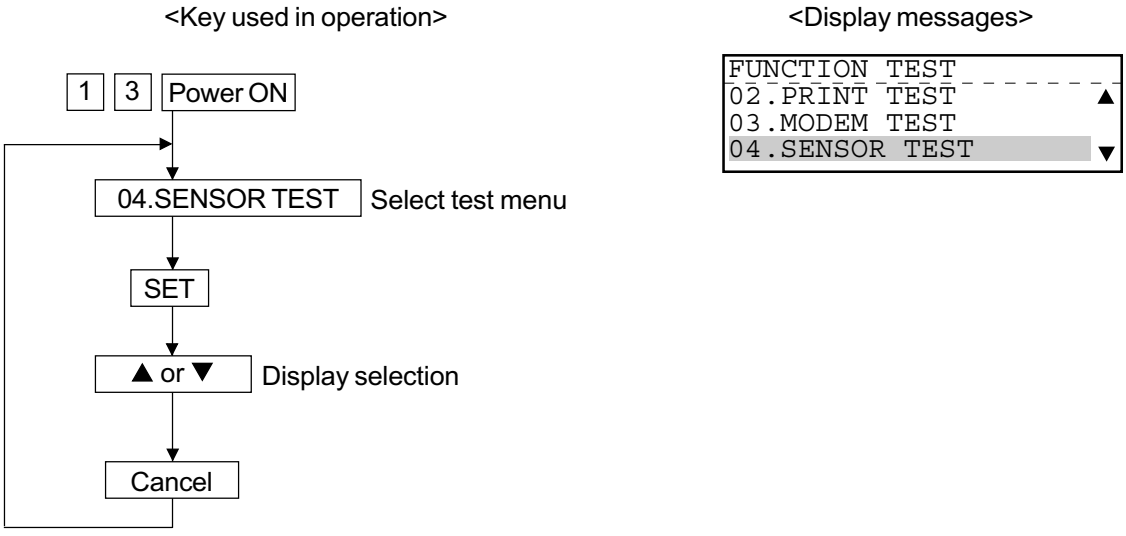

<Display messages>

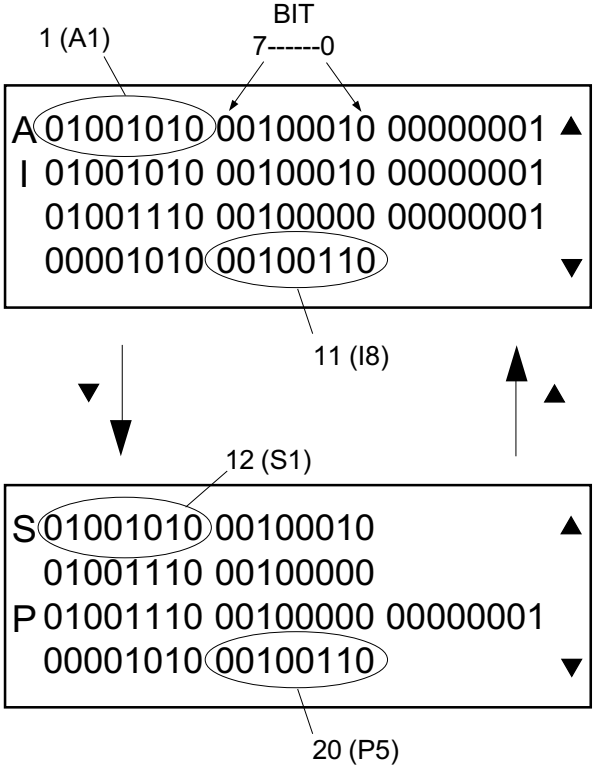

- Explanation of status display

  When the sensor test is carried out, the status of each sensor is indicated on the display with 0 or 1.

  Each signal is divided into 8-bit blocks.

  The character on the left edge of the display indicates as follows:

  A: Signal input to ASIC

  I: Signal input to the IO port

  S: Signal from the scanner or R/ADF

  P: Signal from the option connected to the PFC

  The display is switched using the △ or ▽ key.

Status display example

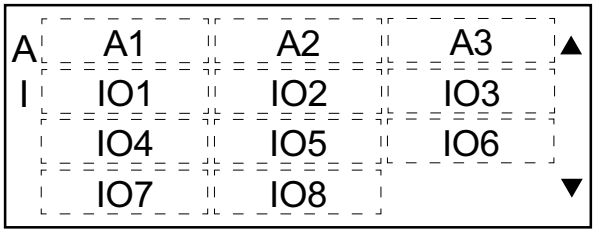

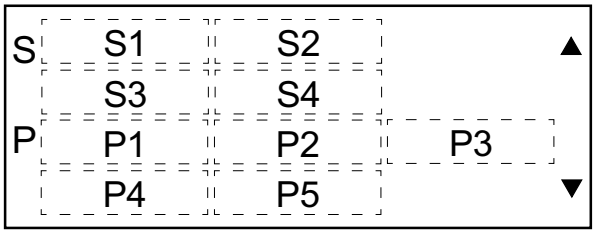

Example 1:

Confirm whether the front cover is open or close.

The front cover is equipped with the 24-V ON/OFF switch (Interlock switch) and the front cover switch.

The status of both switches is 1 when the cover is open, and 0 when it is close.

When the status of the one is 0 and that of the other is 1 as shown in the example, there is something wrong with either of these switches.

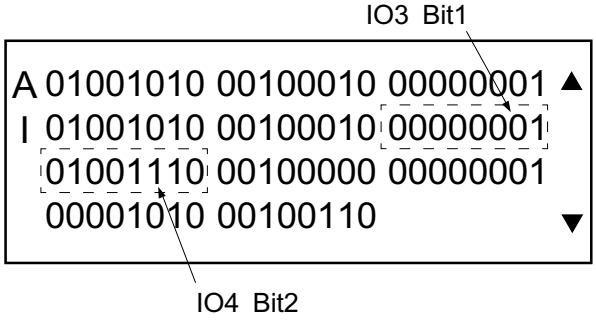

	Front cover	
	Open	Close
IO3 bit 1 (Interlock switch)	1	0
IO4 bit 2 (Front cover switch)	1	0

Example 2:

Confirm whether or not the optional memory PWA is installed, with the status of bits 6 and 7 of IO1 on the display.

As shown in the table below, bits 6 and 7 detect the upper slot and lower slot, respectively.

The installation of the memory PWA can be confirmed with these bits.

Memory expansion slot on the back of the copier

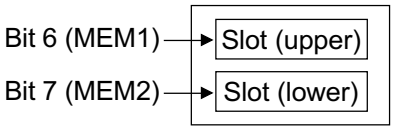

PWA	Bit 7	Bit 6
Not inserted (upper and lower slots)	1	1
Inserted into the upper slot	1	0
Inserted into the lower slot	0	1
Inserted into both slots	0	0

(1: No PWA inserted / 0: PWA inserted)

The capacity of memory installed can be confirmed, with bits 4 and 5 of IO1.

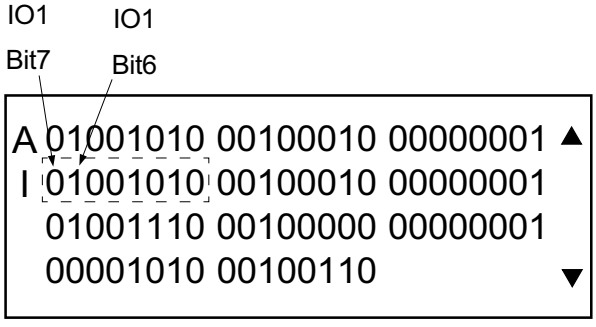

SENSOR TEST (04) ITEMS

Data	Bit	Input info.	Function	Value
1 (A1)	7	A/D CH0 b7	Fusing thermistor A/D value	00H-FFH
	6	A/D CH0 b6	The value for temperature data is expressed with 8 bits.	
ASIC1	5	A/D CH0 b5		
A/D	4	A/D CH0 b4		
CH0	3	A/D CH0 b3		
	2	A/D CH0 b2		
	1	A/D CH0 b1		
	0	A/D CH0 b0		
2 (A2)	7	A/D CH2 b7	Fusing side thermistor A/D value	00H-FFH
	6	A/D CH2 b6	The value for temperature data is expressed with 8 bits.	
ASIC1	5	A/D CH2 b5		
A/D	4	A/D CH2 b4		
CH2	3	A/D CH2 b3		
	2	A/D CH2 b2		
	1	A/D CH2 b1		
	0	A/D CH2 b0		
3 (A3)	7	A/D CH3 b7	Drum thermistor A/D value	00H-FFH
	6	A/D CH3 b6	The value for temperature data is expressed with 8 bits.	
ASIC1	5	A/D CH3 b5		
A/D	4	A/D CH3 b4		
CH3	3	A/D CH3 b3		
	2	A/D CH3 b2		
	1	A/D CH3 b1		
	0	A/D CH3 b0		
4 (IO1)	7	MEM2DET	Option MEM2 connection signal (PWA-F-MEM Optional memory PWA)	0: Connected 1: Not connected
I/O E0100C	6	MEM1DET	Option MEM1 connection signal (PWA-F-MEM Optional memory PWA)	0: Connected 1: Not connected
	5	SDRAM2ID	Detection signal for MEM PWA2 256 M bit SDRAM	0: 256 M bit 1: 64 M bit/128 M bit
	4	SDRAM1ID	Detection signal for MEM PWA1 256 M bit SDRAM	0: 256 M bit 1: 64 M bit/128 M bit
	3	PCLSET	PCL PWA connection detection signal	0: Connected 1: Not connected
	2	AU1SET	I-FAX PWA connection detection signal	0: Connected 1: Not connected
	1	DRUM	Presence or absence detection of process unit	0: Without 1: With
	0	FUSE	Detection of new or old process unit	0: Normal 1: New
5 (IO2)	7	-	-	-
	6	-	-	-
I/O	5	-	-	-
E01006	4	-	Reserved	-
	3	-	Reserved	-
	2	-	Reserved	-
	1	-	Reserved	-
	0	FAXDET	FAX PWA (GD-1061) connection signal	0: Connected 1: Not connected

Data	Bit	Input info.	Function	Value
6 (IO3)	7	-	Reserved	-
	6	-	Reserved	-
I/O	5	-	Reserved	-
E01008	4	BUCS	Battery abnormal condition detection signal	0: Normal 1: Battery abnormal condition
	3	FDS2ON	EXT-SEN (Exit sensor)	0: No paper 1: Paper detected
	2	FDS1ON	FED-SEN (Feed sensor)	0: Paper detected 1: No paper
	1	24VONOFF	Cover open (Interlock SW) detection	0: Closed 1: Open
	0	COS1ON	TC-SW (Toner cartridge switch) *1	0: With 1: Without
7 (IO4)	7	IPCDET	IPC PWA (Finisher) connection signal	0: Connected 1: Not connected
I/O E0100A	6	PCDET	PC-I/F PWA connection signal	0: Connected 1: Not connected
	5	-	-	-
	4	5ROMSEL	RCVROM (MAIN recovery PWA) installation detection	0: RCVROM installed 1: Not installed
	3	PSS3	CST-SW (Paper cassette switch)	0: Closed 1: Open
	2	FCOSON	FRCOV-SW (Front cover switch) *1	0: Closed 1: Open
	1	PESON	PE-SEN (Paper empty sensor) Cassette 1	0: Paper loaded 1: Paper empty
	0	LPSON	T-UP-SEN (Tray-up sensor) Cassette 1	0: Not lifted up 1: Lifted up
8 (IO5)	7	-	-	-
	6	-	-	-
I/O	5	-	-	-
E02006	4	JCONECT	Connection of any of JSP or OCT	0: Connected 1: Not connected
	3	-	Reserved	-
	2	FSELECT	Connection of BRIDGE COVER	0: BRIDGE COVER connected 1: JSP or OCT
	1	-	-	-
	0	-	Reserved	-
9 (IO6)	7	TESTMON	TNRE-SEN (Toner empty sensor)	0: Toner empty 1: Toner detected
I/O E02008	6	PMSTS	Polygon motor synchronizing signal	0: Synchronous 1: Asynchronous
	5	JPASSW	Connection of OCT	0: OCT connected 1: BRIDGE COVER or JSP
	4	JJAMSW	Jam detection/jam detection/middle jam detection *2	0: No paper 1: Paper present (JSP/OCT) 0: No paper 1: Paper present (BRIDGE COVER)
	3	JCOSON	JSP cover open/OCT cover open/BRIDGE COVER cover open *2	0: Cover closed 1: Cover open
	2	JPOSON	Paper in upper stacker/-/BRIDGE COVER exit jam detection *2	0: No paper 1: Paper detected (JSP/OCT) 0: Paper detected 1: No paper (BRIDGE COVER)
	1	JFLS2ON	Upper stacker paper full/offset initial position/- *2	0: Normal/non-initial 1: paper full/initial position
	0	JFLS1ON	Lower stacker/paper full/paper full *2	0: Normal 1: Paper full (JSP/OCT) 0: Paper full 1: Normal (BRIDGE COVER)

*1: The detection of the presence or absence of a toner cartridge is correctly displayed only when the front cover is open.
*2: One of the three options is indicated (only one of them can be connect).

Data	Bit	Input info.	Function	Value
10 (IO7)	7	-	Reserved	-
	6	-	Reserved	-
I/O	5	-	Reserved	-
E0200A	4	-	Reserved	-
	3	16MBDET	Pix SDRAM 16MB/32MB recognition signal	0: 32 MB 1: 16 MB
	2	-	Reserved	-
	1	MMSYNC	Main motor synchronization	0: Synchronous (constant speed) 1: Asynchronous
	0	G/PCHK	Distinction between GDI and PCL	0: PCL 1: GDI
11 (IO8)	7	CTR-CNT	Counter connection signal	0: Connected 1: Not connected
I/O	6	ENABLE	Enable signal	0: Copy limited 1: Enable
E50000	5	MCONECT	SFB unit connection signal	0: Connected 1: Not connected
Low order				
8 bits	4	MPSS3ON	SFB paper size sensor 3 ON signal	0: ON 1: OFF
	3	MPSS2ON	SFB paper size sensor 2 ON signal	0: ON 1: OFF
	2	MPSS1ON	SFB paper size sensor 1 ON signal	0: ON 1: OFF
	1	MPSS0ON	SFB paper size sensor 0 ON signal	0: ON 1: OFF
	0	MPESON	SET-SEN (SFB feed sensor)	0: Paper present 1: Paper empty
12 (S1)	7		HOME-SEN (Home position sensor)	0: Not HP 1: HP
	6		Reserved	
Scanner sensor	5		Reserved	
status 1	4		ADF: ADFCOV-SW (ADF top cover open switch) RADF: JAM-SW (Jam access cover switch)	0: Closed 1: Open
Upper 8 bits				
	3		SIZE-SEN (Document length sensor)	0: No paper 1: Paper detected
	2		ADF: ADFOPN-SEN (ADF open sensor) RADF: RADF-OPN-SNS (RADF open/close sensor)	0: Closed 1: Open
	1		ADF: EMPTY-SEN (Document empty sensor) RADF: EMP-SNS (Empty sensor)	0: Paper empty 1: Paper detected
	0		ORCOV-SEN (Original cover sensor)	0: Closed 1: Open
13 (S2)	7		Reserved	
	6		LENG-SNS (Original length sensor)	0: No paper 1: Paper present
Scanner sensor	5		TRY-SNS (Tray sensor)	0: No paper 1: Paper present
status 1	4		READ-SNS (Read sensor)	0: No paper 1: Paper present
Low order	3		RVR-SNS (Reverse sensor)	0: No paper 1: Paper present
8 bits	2		ADF: REGST-SEN (ADF registration sensor) RADF: REG-SNS (Registration sensor)	0: No paper 1: Paper present
	1		POS-SEN (ADF read sensor)	0: No paper 1: Paper present
	0		ADF: HAISI-SEN (ADF exit sensor) RADF: EXIT-SNS (Exit sensor)	0: No paper 1: Paper present
14 (S3)	7		Reserved	
	6		APS-6 (Automatic paper size detection sensor)	0: No paper 1: Paper present
Scanner sensor	5		APS-5 (Automatic paper size detection sensor)	0: No paper 1: Paper present
status 2	4		APS-4 (Automatic paper size detection sensor)	0: No paper 1: Paper present
Upper order	3		APS-3 (Automatic paper size detection sensor)	0: No paper 1: Paper present
8 bits	2		APS-2 (Automatic paper size detection sensor)	0: No paper 1: Paper present
	1		APS-1 (Automatic paper size detection sensor)	0: No paper 1: Paper present
	0		Reserved	

Data	Bit	Input info.	Function	Value
15 (S4)	7		Reserved	
	6		SIZE-SNS 3 (Original width sensor 3)	0: No paper 1: Paper present
Scanner sensor	5		SIZE-SNS 2 (Original width sensor 2)	0: No paper 1: Paper present
status 2	4		SIZE-SNS 1 (Original width sensor 1)	0: No paper 1: Paper present
Low order	3		Reserved	-
8 bits	2		Reserved	-
	1		Reserved	-
	0		Reserved	-
16 (P1)	7	SIZPFU	2CST-SW (PFU Cassette switch)	0: Installed 1: Not installed
	6	-	Reserved	-
PFC	5	-	Reserved	-
Input check 1	4	-	Reserved	-
	3	PFUFD-SW	OCF-SEN (2nd feed sensor)	0: No paper 1: Paper present
	2	PFUCOV	2COV-SW (PFU cover open switch)	0: Closed 1: Open
	1	PFUEMP	2PE-SEN (PFU paper empty sensor)	0: Paper loaded 1: Paper empty
	0	PFUUP	2T-UP-SEN (PFU tray-up sensor)	0: Not lifted up 1: Lifted up
17 (P2)	7	SIZCU	CST-U-SW (Upper cassette detection switch)	0: Installed 1: Not installed
		LCTRBTM	TRY-BTH-SNR (Tray bottom sensor)	0: Other 1: Lower limit
PFC	6	-	Reserved	-
Input check 2		CFENCL0	PR-MST-SS (Standby side paper mis-staking sensor)	0: OFF 1: Closed
*1	5	-	Reserved	-
		SIZLC	Cassette detection switch (LCF)	0: Installed 1: Not installed
	4	FEDU	FED-U-SNR (Upper feed sensor)	0: No paper 1: Paper loaded
		-	Reserved	-
	3	-	Reserved	-
		-	Reserved	-
	2	COV-SW	SIDE-COV-SW (Side cover open/close switch)	0: Closed 1: Open
		-	Reserved	-
	1	PEMPU	EMP-U-SNR (Upper cassette paper empty sensor)	0: Paper loaded 1: No paper
		-	Reserved	-
	0	TUPU	TOP-U-SNR (Upper cassette tray-up sensor)	0: Not lifted up 1: Lifted up
		-	PST-SNR-FS (Feeding side paper stock sensor)	-
18 (P3)	7	SIZCL	LST-L-SW (Lower cassette detection switch)	0: Installed 1: Not installed
		LMTBCKF	EMD-F-HP-SNR (End fence home position sensor)	0: Other 1: Fence back limit
PFC	6	-	Reserved	-
Input check 3		LMTFWDK	END-F-STP-SNR (End fence stop position sensor)	0: OFF 1: Fence forward limit
*1	5	-	Reserved	-
		LCEMPFD	EMP-SNR-SS (Standby side empty sensor)	0: OFF 1: Open
	4	FEDL	FED-L-SNR (Lower feed sensor)	0: No paper 1: Paper loaded
		LCSIDCOV	Side cover open/close switch (LCF)	0: Open 1: Closed
	3	PLL-OK	PLL lock signal	0: Stable 1: Other
		LCMOTLD	LCF transport motor	0: Operating 1: Motor stopped
	2	-	Reserved	-
		LCTRTOP	TOP-SNR (Tray-up sensor)	0: Other 1: Upper limit
	1	PEMPL	EMP-L-SNR (Lower cassette paper empty sensor)	0: Paper loaded 1: No paper
		LCRLYSW	FED-SNR (Feed sensor)	0: Paper detected 1: No paper
	0	TUPL	TOP-L-SNR (Lower cassette tray-up sensor)	0: Not lifted up 1: Lifted up
		LCEMP	EMP-SNR-FS (Feeding side empty sensor)	0: No paper 1: Paper present

*1: The upper value for each bit indicates the function assumed when the PFP is installed, and the lower value the function assumed when the LCF is installed.

Data	Bit	Input info.	Function	Value
19 (P4) PFC Input check 4	7		PFU connection signal	0: Connected 1: Not connected
	6	-	Reserved	-
	5	-	Reserved	-
	4	-	Reserved	-
	3		ADUCOV-SW (ADU cover open switch)	0: Closed 1: Open
	2		FED2-SEN (ADU paper jam sensor (Upper))	0: No paper 1: Paper present
	1		FED1-SEN (ADU paper jam sensor (Lower))	0: No paper 1: Paper present
	0	-	Reserved	
20 (P5) PFC Input check 5	7	EXIT-SW	EXT-SEN (Exit sensor)	0: No paper 1: Paper present
	6	PSTP-1	FED-SEN (Feed sensor)	0: Paper present 1: No paper
	5	24VCHK	24V down signal	0: Down 1: Normal
	4	ADCNT	ADU connection signal	0: Connected 1: Not connected
	3	-	Reserved	-
	2	LCFCNT	LCF connection signal	0: Connected 1: Not connected
	1	-	Reserved	-
	0	PFPCNT	PFP connection signal	0: Connected 1: Not connected

(5) 05. SRAM TEST

The read/write test is performed throughout the image memory. The test checks the whole SRAM. When an error is found, the address of the erroneous portion is displayed and the test is stopped.

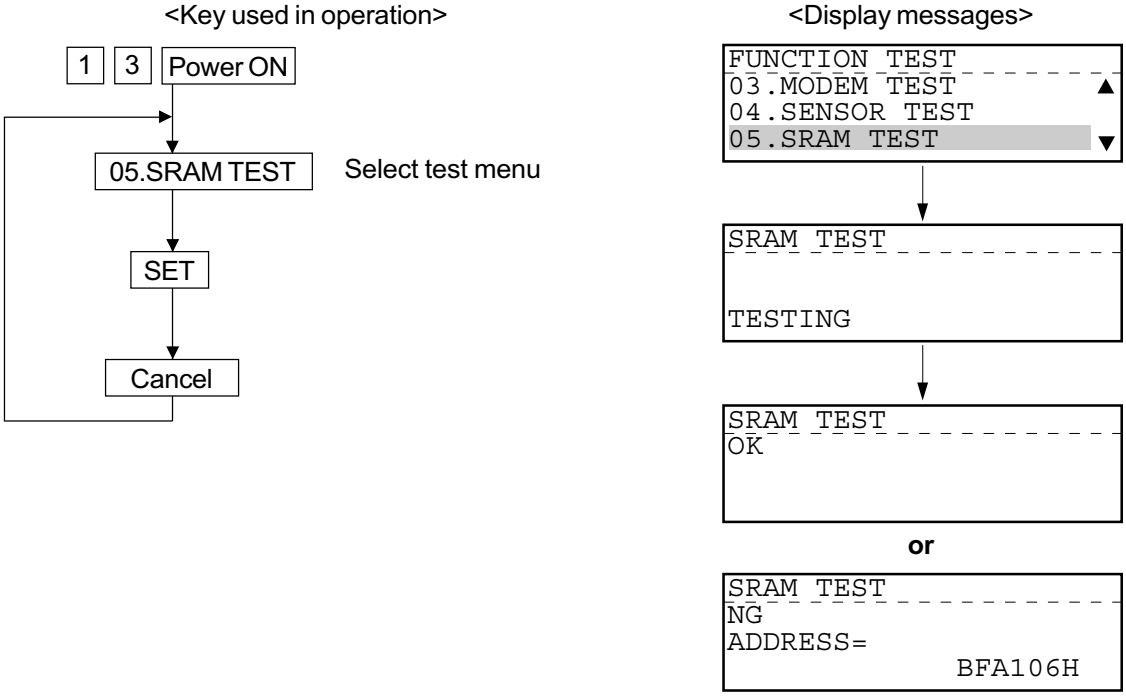

(6) 06. DRAM TEST

The read/write test is performed on the DRAM (including page memory and image memory). When an error is found, the address of the erroneous portion is displayed and the test is stopped.

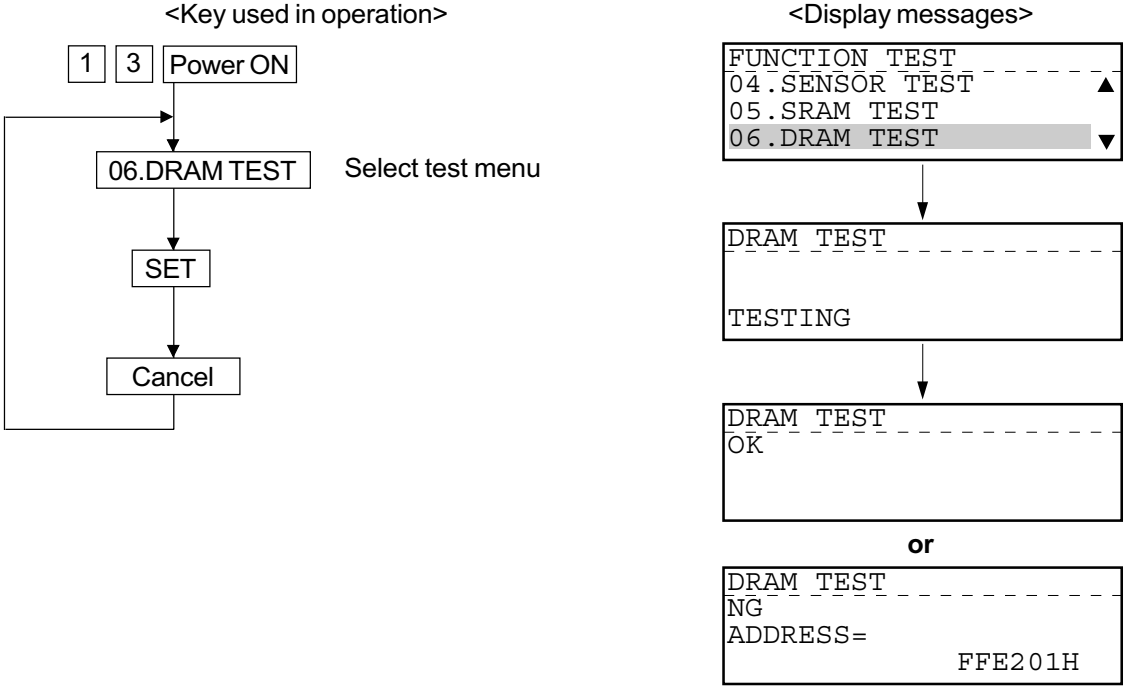

(7) 07. CLOCK IC TEST

After programming the fixed data and time on the clock IC, the test reads the programmed data and time and checks whether or not they are correct

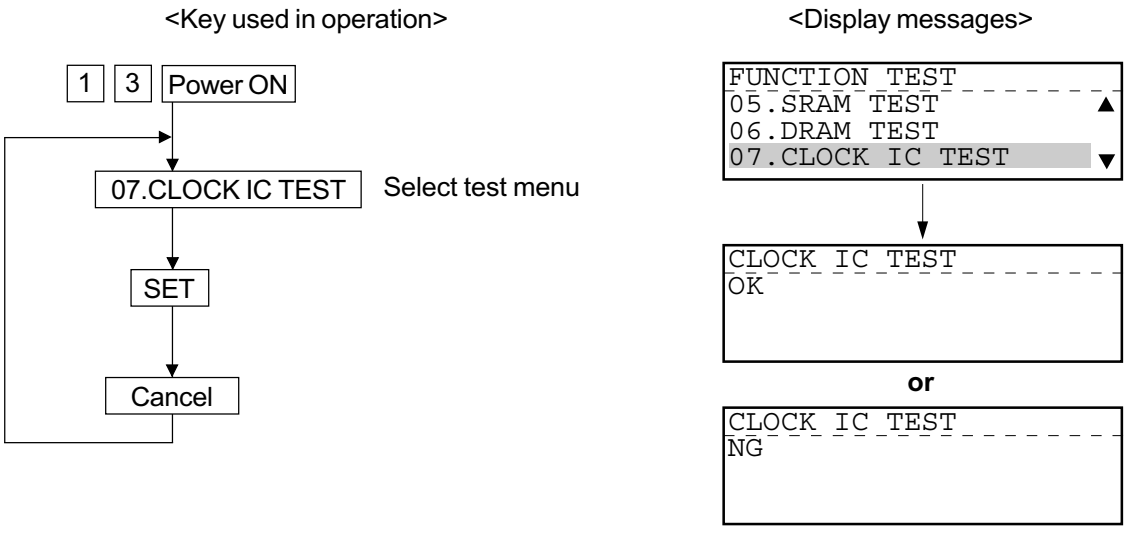

(8) 08. SCANNER TEST

The read/write test is performed on the RAM built in the image processing LSI.

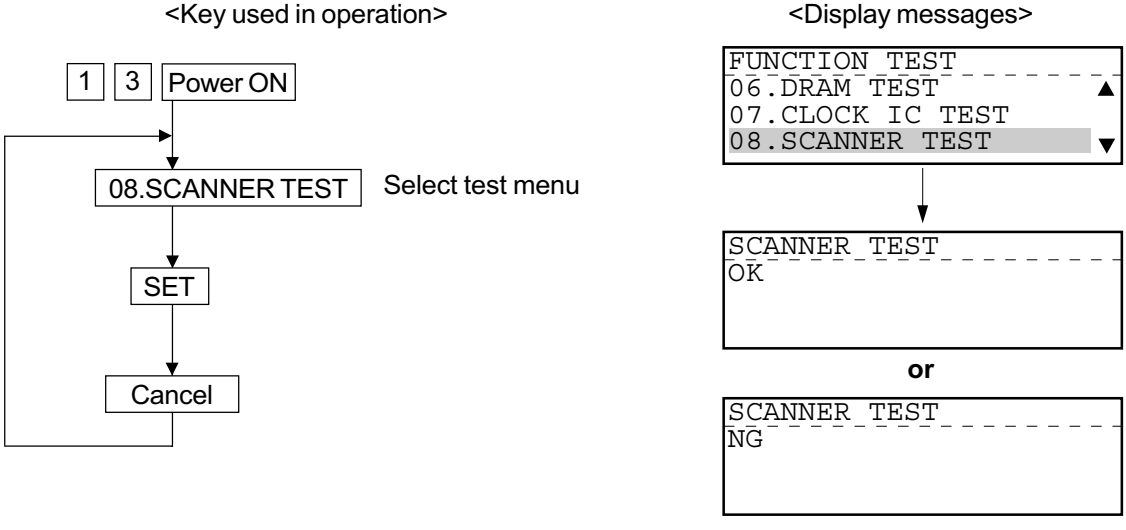

(9) 09. CODEC TEST

The test encodes data of 10 lines using the MH coding, decodes it and compares it with the original data.

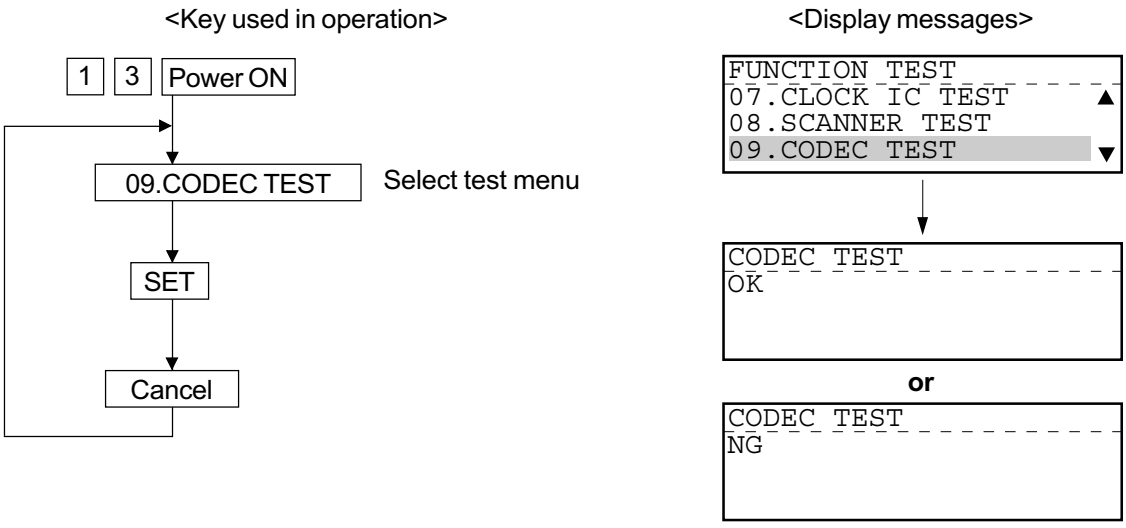

(10) 10. OUTPUT TEST

This test checks the operation of the motor, clutch and fan separately.

This test can check the operations of two or more parts at the same time. For example, the motor is tuned on while the clutch is on.

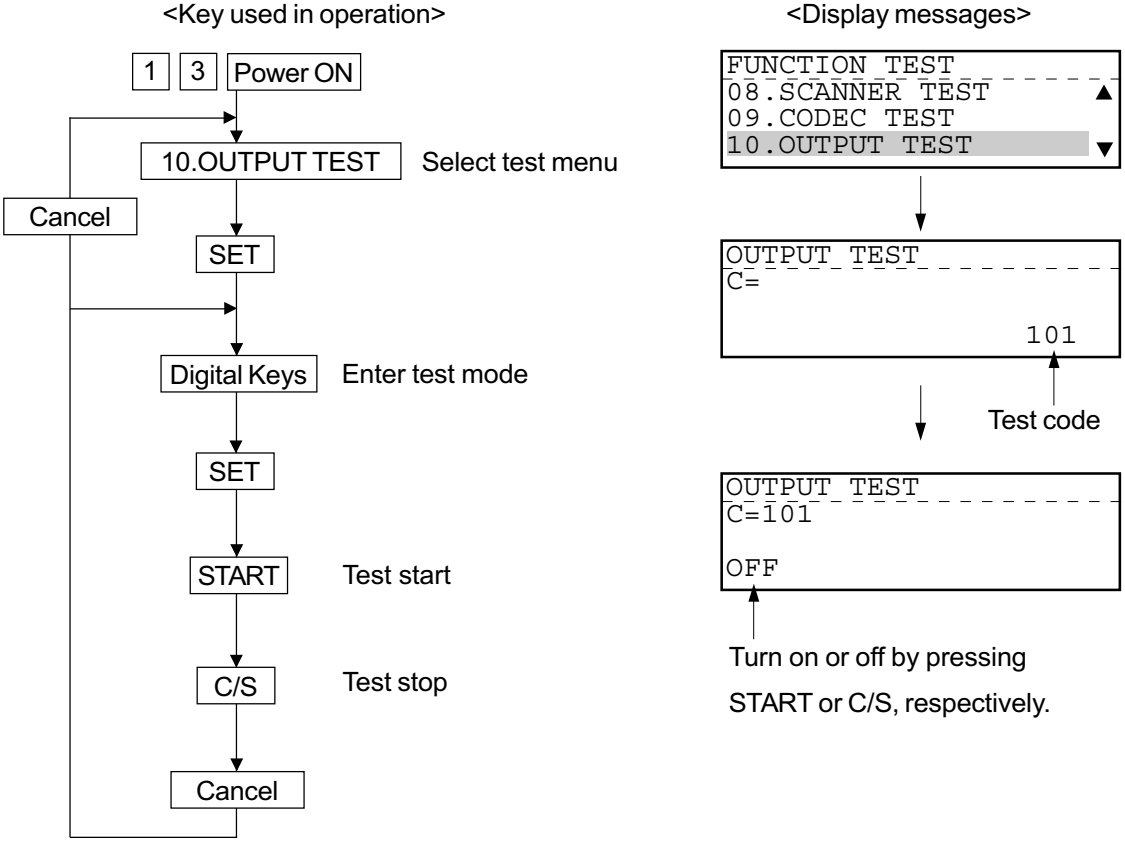

OUTPUT TEST (10) ITEMS

Code	Compo.	Operation	Note
101	Copier	Main motor ON (discharge also ON)/OFF	
102	Copier	Toner motor ON/OFF	
103	Copier	Polygon motor ON (600 DPI)/OFF	
105	Copier	Polygon motor ON (16*15.4)/OFF	
106	Copier	Polygon motor ON (15.4*16)/OFF	
108	Copier	Registration roller clutch ON/OFF	
109	PFC	PFP main motor ON/OFF	
201	Copier	Pickup clutch ON/OFF	
202	PFC	PFU pickup clutch ON/OFF	
203	PFC	2nd feed clutch ON/OFF	
204	Copier	Bypass feed clutch ON/OFF	
205	PFC	LCF feed clutch	
206	PFC	LCF transport clutch	
222	PFC	ADU motor (Lower) ON/OFF	
223	PFC	ADU motor (Upper) forward ON/OFF	
224	PFC	ADU motor (Upper) reverse ON/OFF	
225	PFC	PFP transfer clutch ON/OFF	
226	PFC	Cassette 3 feed clutch ON/OFF	
227	PFC	Cassette 4 feed clutch ON/OFF	
242	Copier	Cassette 1 tray-up motor ON	
243	PFC	Cassette 2 tary-up motor ON	
250	Copier	Developer bias transformer ON/OFF	
251	Copier	Charging ON/OFF	
255	Copier	Transfer guide bias ON/OFF (Do it after having done ON of the output of Code 250)	
256	Copier	Laser ON/OFF	
261	Scanner	Scanner carriage motor ON (automatic stop at limit)	
263	Scanner	Exposure lamp ON/OFF	
268	PFC	LCF end fence motor ON (right and left)	
269	PFC	LCF end fence solenoid ON/OFF	
270	PFC	LCF transport motor ON/OFF	
271	PFC	LCF tray-up motor up/down	
275	PFC	Cassette 3 tary-up motor ON	
276	PFC	Cassette 4 tary-up motor ON	
281	RADF	RADF pick-up roller rotation ON/OFF (F MOT)	
282	RADF	RADF registration roller rotation ON/OFF (F MOT)	
283	RADF	RADF read roller CW rotation ON/OFF (RDMOT)	
284	RADF	RADF read roller CCW rotation ON/OFF (RDMOT)	
285	RADF	RADF reverse roller CW rotation ON/OFF (RVMOT)	
286	RADF	RADF reverse roller CCW rotation ON/OFF (RVMOT)	
287	RADF	RADF document reverse solenoid ON/OFF	
288	RADF	RADF exit solenoid ON/OFF	
296	ADF	ADF transport motor forward ON/OFF	
297	ADF	ADF transport motor reverse ON/OFF	
298	RADF	RADF fan motor ON/OFF	

Code	Compo.	Operation	Note
302	Copier	Transfer DC-ON-HIGH (05-220 value used)	
303	Copier	Transfer DC-ON-CENTER (05-221 value used)	
304	Copier	Transfer DC-ON-LOW (05-222 value used)	
308	Copier	Separation-ON-HIGH (05-233 value used, developer bias also output)	
309	Copier	Separation-ON-CENTER (05-234 value used, developer bias also output)	
310	Copier	Separation-ON-LOW (05-235 value used, developer bias also output)	
330	Copier	Process unit fan motor : H (High speed rotation), and vacuum fan motor rotation	
331	Copier	Process unit fan motor : L (Low speed rotation), and vacuum fan motor rotation	
333	Copier	JOB separator/FIN pass solenoid ON/OFF	
334	Copier	Offset tray Stack front/rear (OCT motor ON/OFF)	

(11) PRINTER BOARD TEST

The test checks whether or not the printer board operates normally, by exchanging simple commands with the printer board.

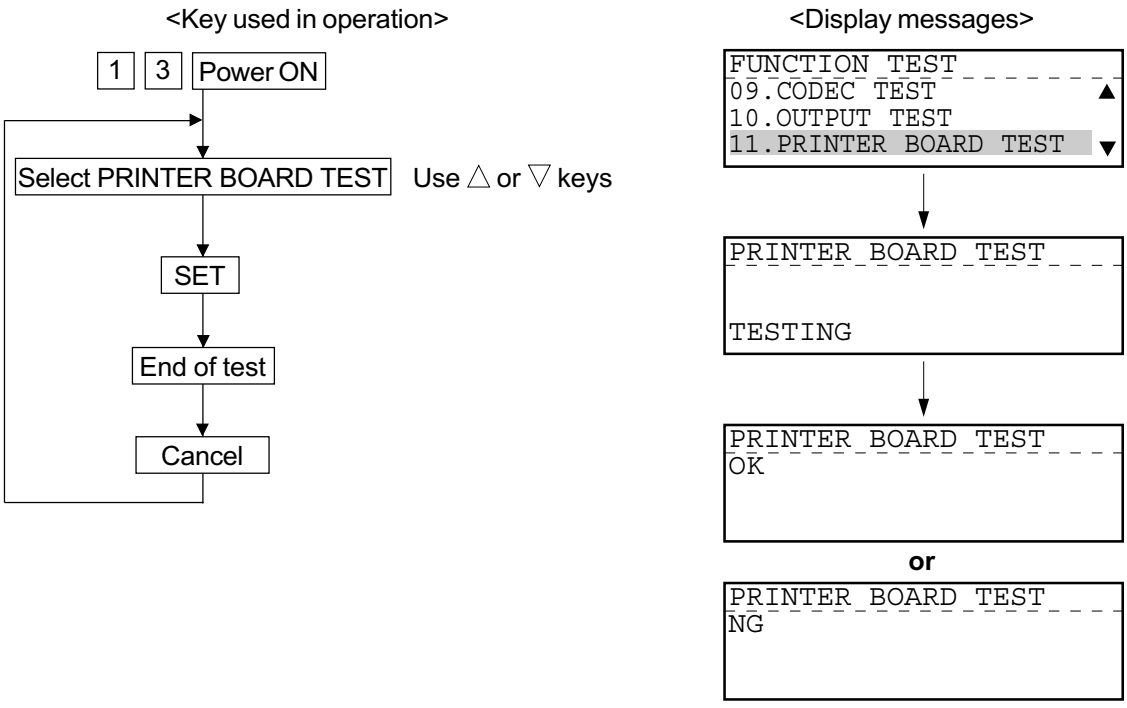

1.2.5 MAINTENANCE

(1) MEMORY CLEAR

There are two ways to perform memory clear; the power on while pressing the specified keys, and partial memory clear by selecting items to be cleared from the menu.

Operation Procedure

a) Memory clear at the startup

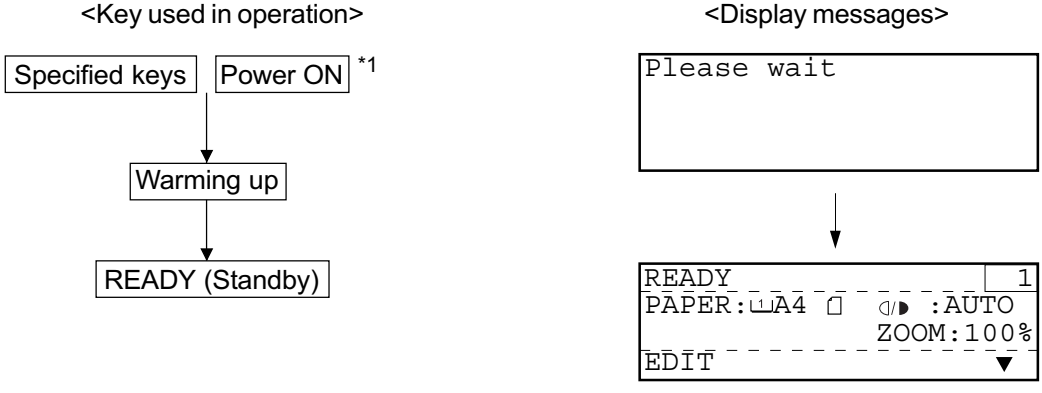

*1 : Continue pushing the key until “Please wait” message is displayed.
Moreover, do not turn off the power supply.

b) Item selection from menu

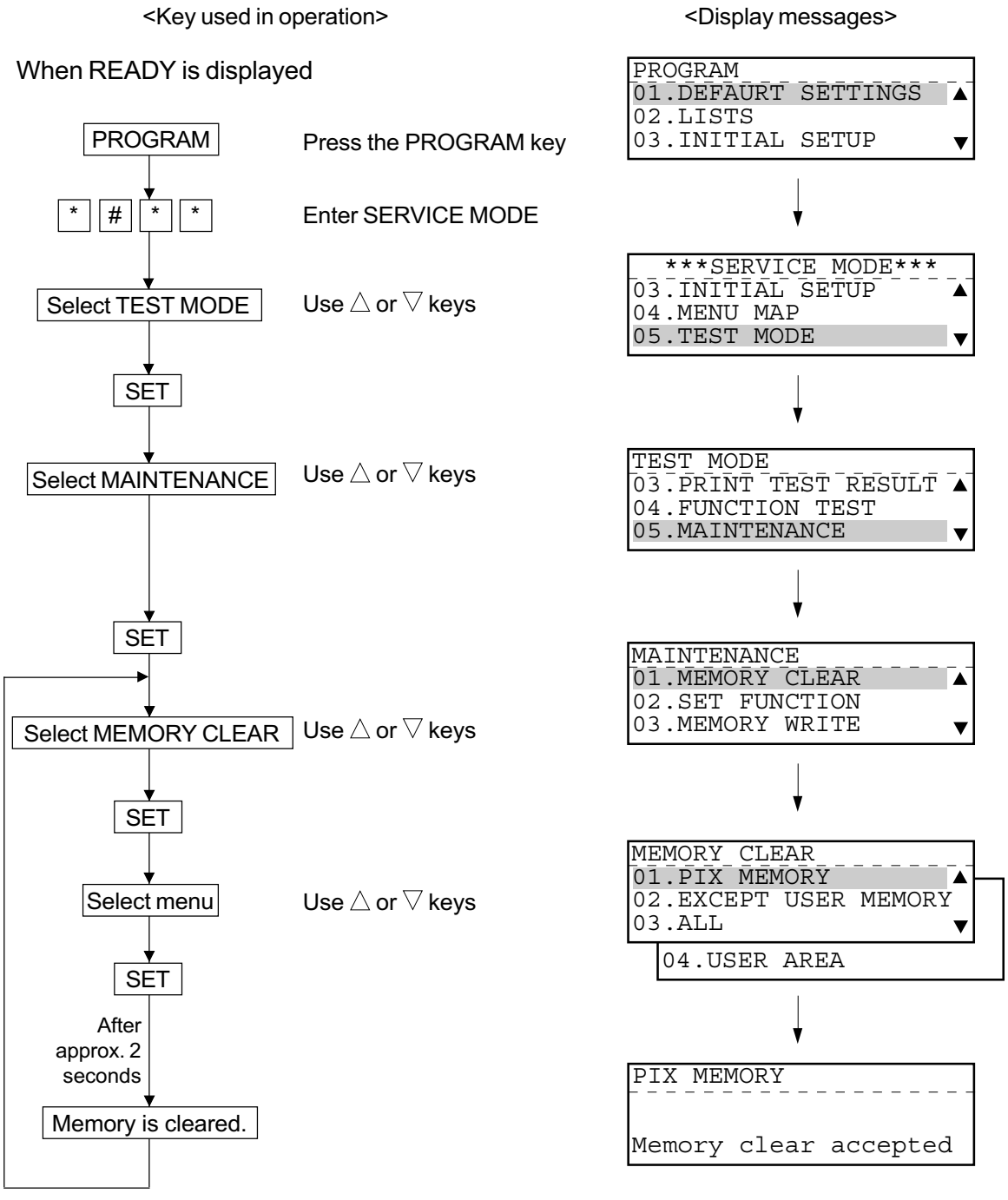

RAM clear table

RAM data / RAM clear mode	Country/ Region setting	Service parameter setting								
		FUNC/ SYSFUNC/ UAD etc.	Service adjustment data ([0][5]) area	Service setting data ([0][8]) area	Journal report data	Error data on FAX communi-cation	Protocol trace data	Counter data *a)	Drum related data *b)	
[1] [3] [*] and turn ON *2) *3)		Set default value		Set default value *e)	Clear	Clear	Clear			
[1] [3] [#] and turn ON *2)							Clear	Clear		
[*] [#] and turn ON *2)					Clear	Clear	Clear			
[START] [STOP] and turn ON *2)		Set default value		Set default value *e)			Clear			
[0] [8] and turn ON, then [6] [6] [5] *1)			Set default value	Set default value			Clear			
[0] [2] and turn ON	Changeable	Set default value		Set default value *e)	Clear	Clear	Clear			
1. PIX MEMORY										
2. EXCEPT USER MEMORY		Set default value			Clear	Clear				
3. ALL *3) (Same as "[1] [3] [*] and turn ON")		Set default value		Set default value *e)	Clear	Clear	Clear			
4. USER AREA *3)							Clear			

*1) In case of replacing the main board in the field, you can initializes the parameters related to copy function stored on the board using this function.
Therefore when this function is performed, it is necessary to readjust the following items.

1) Adjustment of paper aligning value
2) Printer unit adjustment
3) Scanner unit adjustment
4) ADF/RADF installation setting

*2) When RAM clear is performed, no message is indicated on the LCD.
Once RAM clear has been completed, "Please wait" appears on the LCD.

*3) RAM clear may take more than 10 seconds. Note that the error (Broken Registration) results if the power is turned off during RAM clear.

User parameter setting								
Dial data *c)	One touch data	Department code data	Secure receive data	Station name	ID number	Passward *d)	Pending FAX job data	Stored JOB data
Clear	Clear	Clear	Clear	Clear	Clear	Clear	Clear	Clear
							Clear	
								Clear
Clear	Clear	Clear	Clear	Clear	Clear	Clear	Clear	Clear
							Clear	
							Clear	
Clear	Clear	Clear	Clear	Clear	Clear	Clear	Clear	Clear
Clear	Clear	Clear	Clear	Clear	Clear	Clear	Clear	

*a) Total Scan, Print jam, Job counter, Counter for each paper size

*b) Total Print, Drum counter, Toner counter, etc.

*c) One touch, Speed, Group etc.

*d) Polling Password, Remote Access Code

*e) 08-446, 08-447 not cleared

(2) SET FUNCTION

Refer to the Service Handbook (GD-1061).

(3) MEMORY WRITE

You can refer to and change the data stored at each address in the SRAM and DRAM.

ADDRESS and DATA input it with hex data.

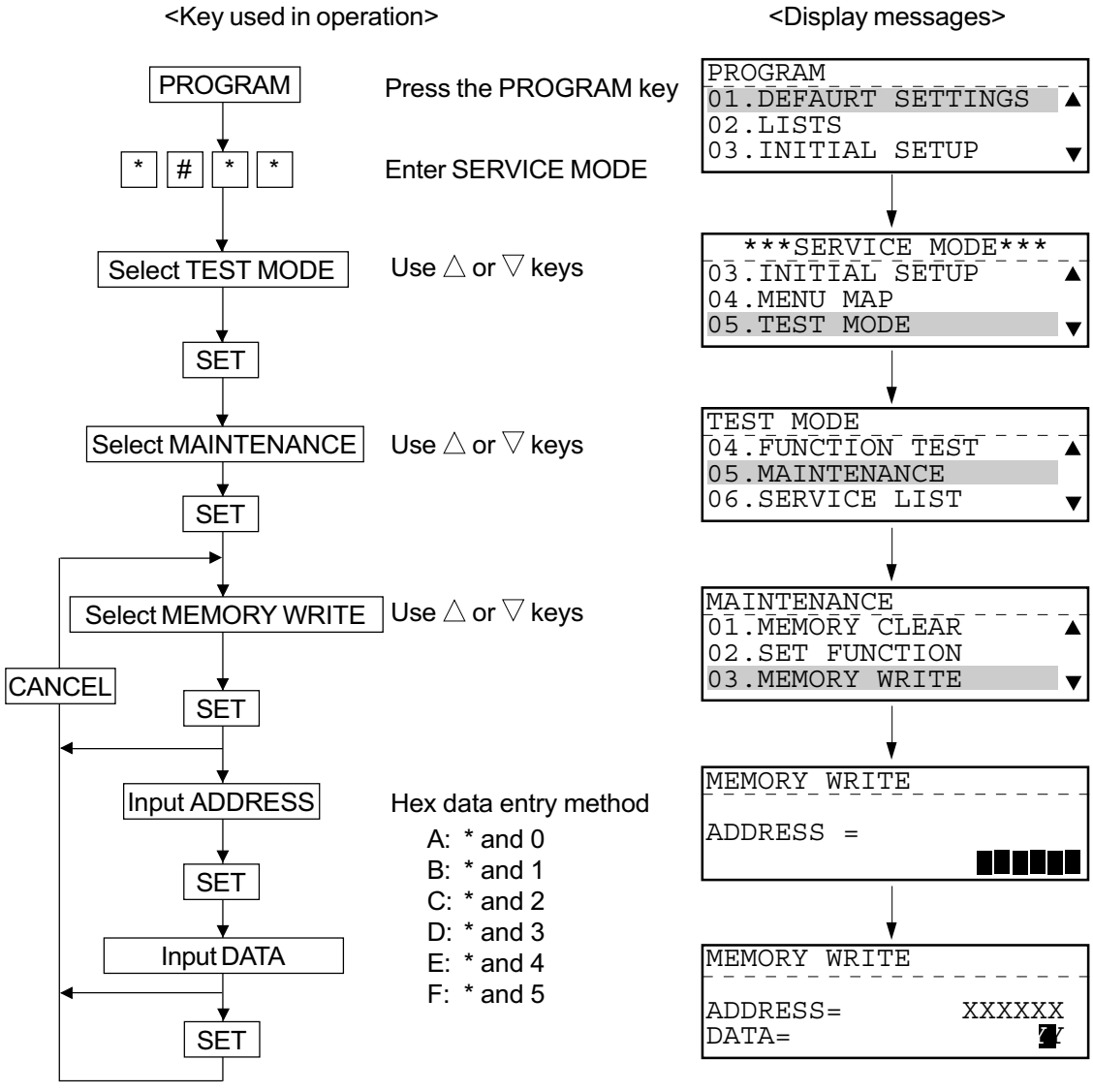

(4) ERROR COUNTER SHIFT

Refer to the Service Handbook (GD-1061).

(5) PIX MEMORY TRANSFER

Refer to the Service Handbook (GD-1061).

1.2.6 SERVICE LIST

This function allows you to print lists. There are six kinds of lists that can be printed.

- PROTOCOL TRACE *1
- TOTAL ERRORS *1
- FUNCTION (FUNC 05, 08 List)
- DRUM HISTORY
- FUNCTION (Jam counter, ROM ver.)

*1: To be printed when the FAX Kit (GD-1061) is installed.

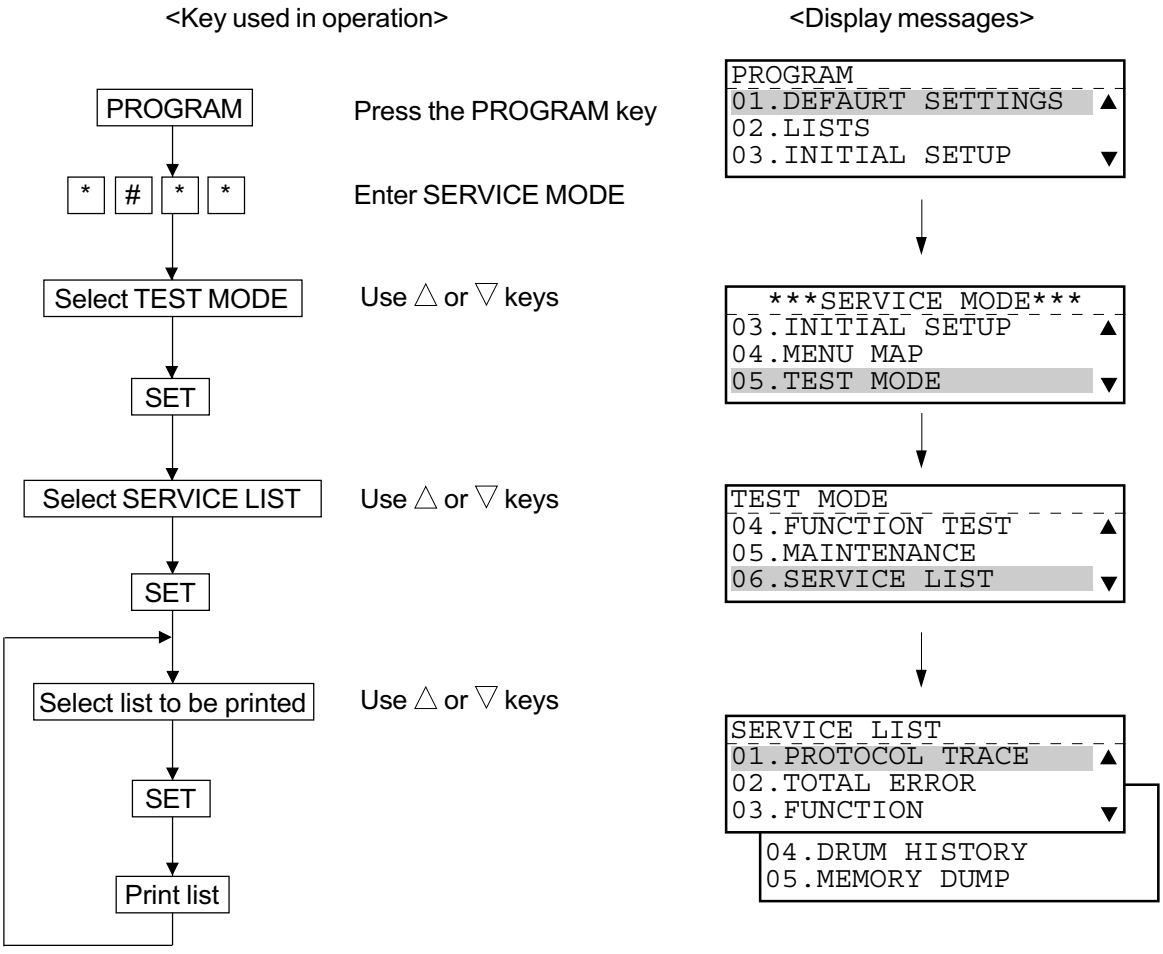

(1) PROTOCOL TRACE

Refer to the Service Handbook (GD-1061).

(2) TOTAL ERRORS

Refer to the Service Handbook (GD-1061).

(3) FUNCTION (FUNC, 05, 08 List)

This list is printed out with a title of SETTING REPORT FOR MAINTENANCE. It prints a list of present function settings.

Print Items

• 1st Sheet

COUNTRY/REGION	Country/Region code
FUNC 0 to 39	Prints the settings at this point of time in binary format.
PC FUNC 0 to 7	↓
HOME 0 to 2	↓
UAD 0 to 19	↓
EX TYPE 1	↓
ACC DGT 1 to 2	↓

• 2nd Sheet

05 xxx	Prints the set values at this point of time.
08 xxx	↓

(xxx is code number.)

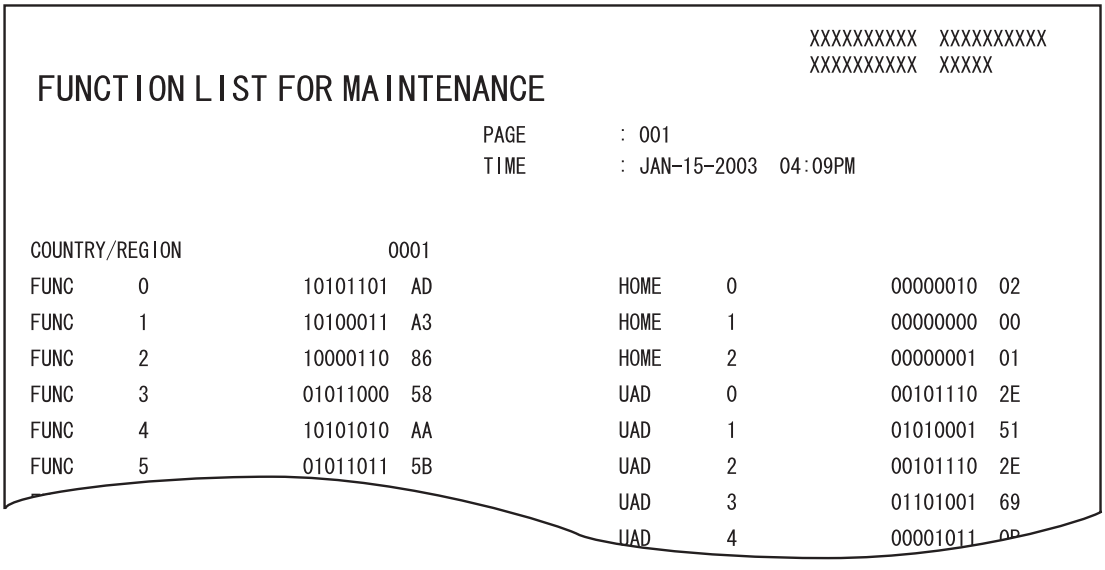

XXXXXXXXXX XXXXXXXXXX
XXXXXXXXXX XXXXX

FUNCTION LIST FOR MAINTENANCE

PAGE : 001
TIME : JAN-15-2003 04:09PM

COUNTRY/REGION 0001

FUNC	0	10101101	AD	HOME	0	00000010	02
FUNC	1	10100011	A3	HOME	1	00000000	00
FUNC	2	10000110	86	HOME	2	00000001	01
FUNC	3	01011000	58	UAD	0	00101110	2E
FUNC	4	10101010	AA	UAD	1	01010001	51
FUNC	5	01011011	5B	UAD	2	00101110	2E
				UAD	3	01101001	69
				UAD	4	00001011	0B

(4) DRUM HISTORY

This list is for checking the use status of the drum. It provides a list of information on the drum being used and the previous drum.

Print Items

- CURRENT COUNTER : Current information
- TOTAL PRINT : Current total print count
- DRUM COUNTER : Current drum counter value (= Print count x10)
- A4/LT or A3/LD : Current print count by paper size
- HISTORY : History of replacing the drum (counter clear)
- DATE : Date when the drum is replaced (counter clear)
- DRUM COUNTER : Counter value at the time when the drum is replaced
- A4/LT or A3/LD : Print count by paper size at the time when the drum is replaced

```
                                                    XXXXXXXXXX  XXXXXXXXXX
                                                    XXXXXXXXXX  XXXXX
DRUM UNIT LIST

                                PAGE        : 001
                                TIME        : JAN-20-03  04:09PM
                                TEL NUMBER  : 12345678901234567890
                                E-MAIL      : ABCDEFGHIJKLMNOPQRSTUVWXYZ12345678901234
                                NAME        : ABCDEFGHIJKLMNOPQRSTUVWXYZABCDEFGHIJKLMN

CURRENT COUNTER

  TOTAL PRINT                        36

  DRUM COUNTER                      360

  A4/LT                              36

  A3/LD                               0

HISTORY

  DATE       DRUM COUNTER    A4/LT     A3/LD
  JAN-16-03            10        1         0
```

(5) MEMORY DUMP LIST

A list of dumped RAM data is printed. Designate a start address (6-digit) and size (4-digit) and press SET for printing.

Print Data

ADDRESS	Memory dump start address. The last digit is always “0.” *1
HEX	The data in memory is printed in hexadecimal. The last digit is always “0.” *2
ASCII	Data obtained by converting the data in memory into ASCII code.

Notes: *1: The last digit is discarded when other than “0.”

*2: The last digit is rounded up when other than “0.”

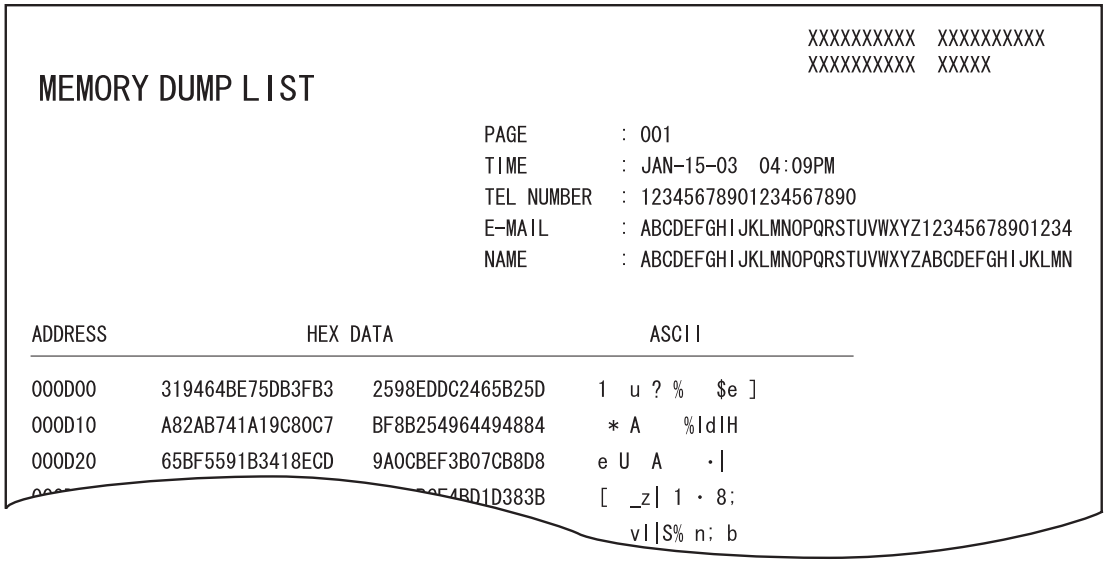

(6) FUNCTION (Jam counter ROM ver.)

Press the PROGRAM key and enter the SERVICE mode. Then, select LISTS and print a function list so that the user set information will be printed on the first sheet, and the jam counter on the second sheet.

The same data as printed in (3) is printed on the third and fourth sheets.

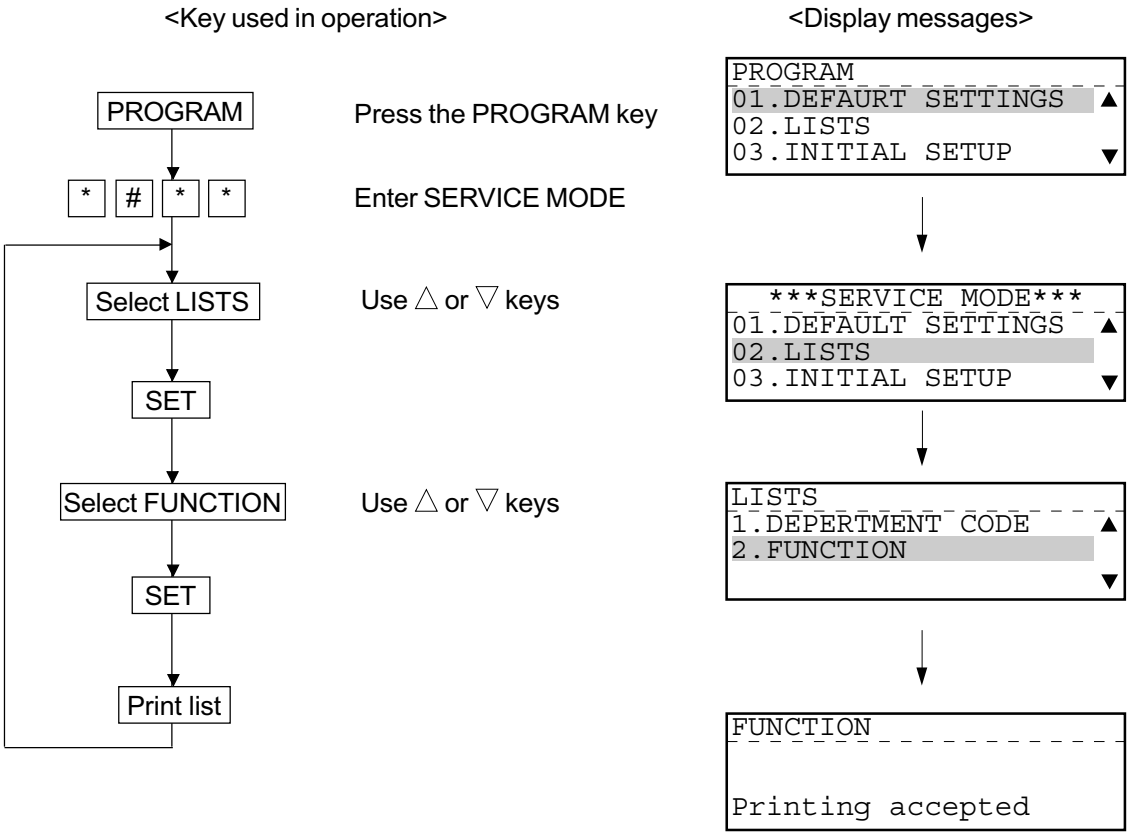

Print Data

JAM COUNTER	Jam information
DOCUMENT	Jammed original count
PAPER JAM	Total count of TYPE1 to 7
TYPE1 JAM	Total count of E13
TYPE2 JAM	Total count of E01
TYPE3 JAM	Total count of E02
TYPE4 JAM	Total count of E11, E12, E14, E15, E16, E19
TYPE5 JAM	Total count of E08, E31 to E36
TYPE6 JAM	Total count of E03, E09, E41, E42, E43, E45
TYPE7 JAM	Total count of EA1 to EA7, EAF
	* Exx: Refer to the 1.1 Error Code List

FLASH ROM	Version information
PROGRAM	Program version and creation date
FUNCTION	Function version and creation date
LANGUAGE	Language version and creation date
SCANNER	Scanner version and creation date

```
                                                    XXXXXXXXXX  XXXXXXXXXX
                                                    XXXXXXXXXX  XXXXX
FUNCTION LIST

                                PAGE        : 002
                                TIME        : JAN-15-03  04:09PM

JAM COUNTER
    DOCUMENT                :       2
    PAPER                   :       1
        TYPE1 JAM           :       0
        TYPE2 JAM           :       0
        TYPE3 JAM           :       0
        TYPE4 JAM           :       1
        TYPE5 JAM           :       0
        TYPE6 JAM           :       0
        TYPE7 JAM           :       0

FLASH ROM
    PROGRAM                 XXXXXXXXXXX
```

1.2.7 Country/Region code

Setting for country or region.

Input code according to a table.

Model	Code	Paper type
NAD	1	LT series
ASD/AUD/CND/SAD/MJD	44	A4 series

Important: When FAX kit (GD-1061) is not installed, do not input code except 1 or 44.

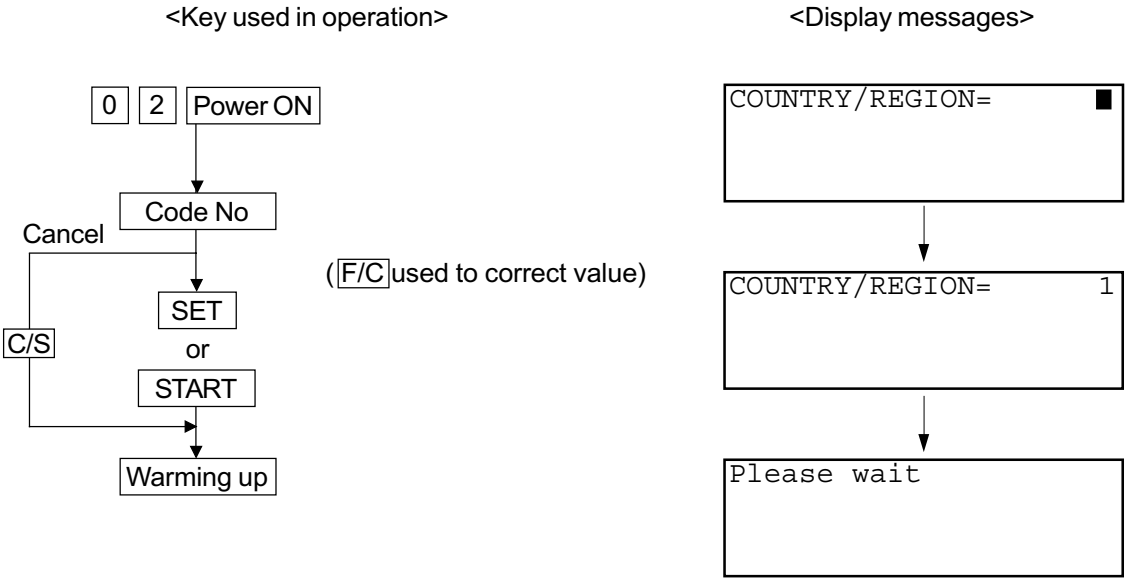

Note: When FAX kit (GD-1061) is installed, refer to a service handbook (GD-1061).

1.2.8 Scanner parking mode

<Key used in operation>

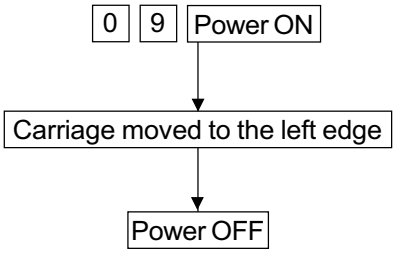

<Display messages>

```
TEST MODE PA
```

(To enable packing screws to be refitted in the scanner unit.)

1.2.9 Speaker volume

Adjust the volume of the alarm and key touch tones.

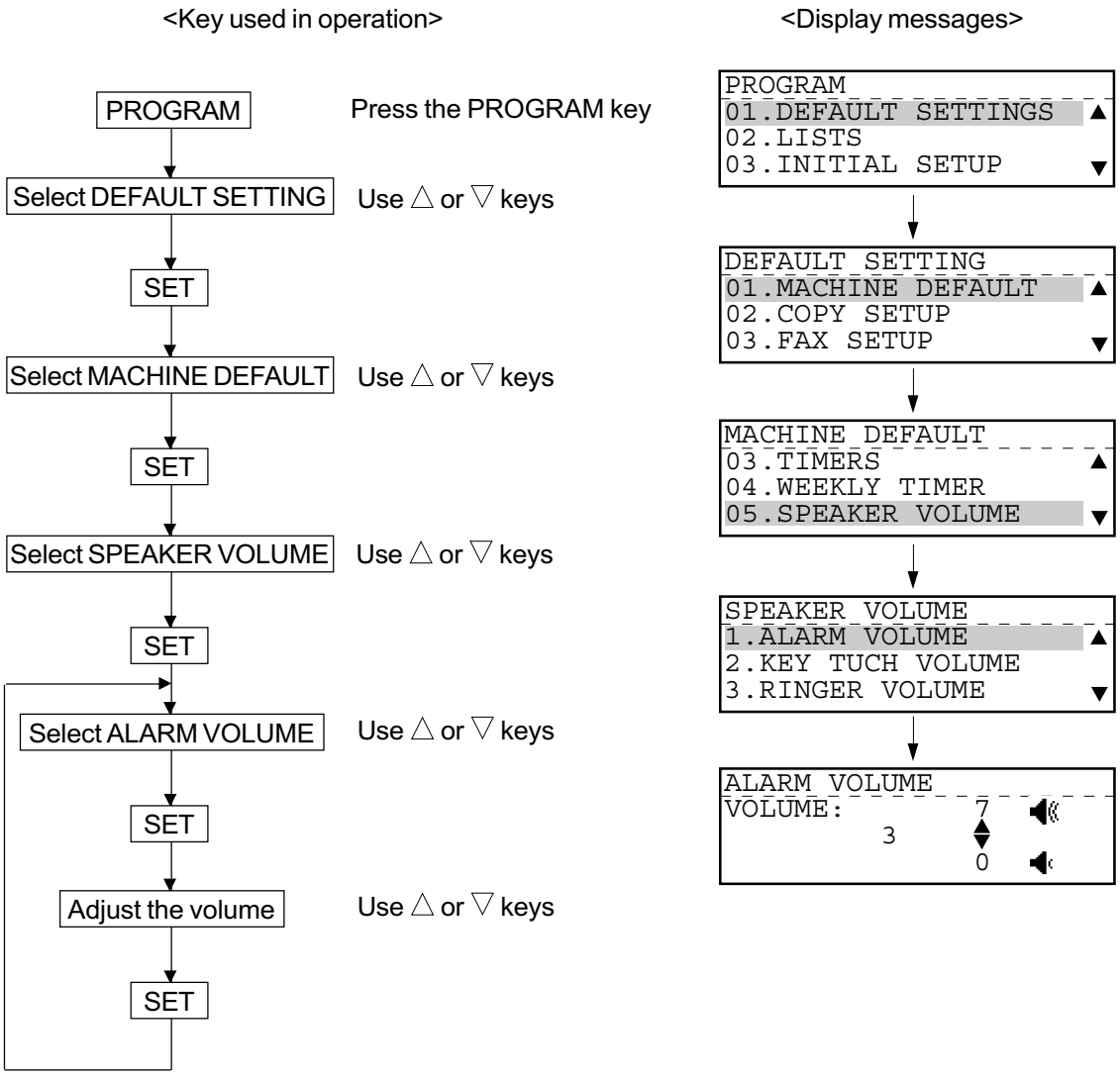

1.2.10 Adjustment of document width sensor

Code 05-380, 381 adjustment procedure.

<Key used in operation>

0 5 Power ON

↓

Adjust the document guide to the narrowest.

(Fig. 1-2-10-1)

↓

3 8 0 Enter code

↓

SET

↓

CANCEL

↓

Adjust the document guide to the widest.

(Fig. 1-2-10-2)

↓

3 8 1 Enter code

↓

SET

↓

Power OFF

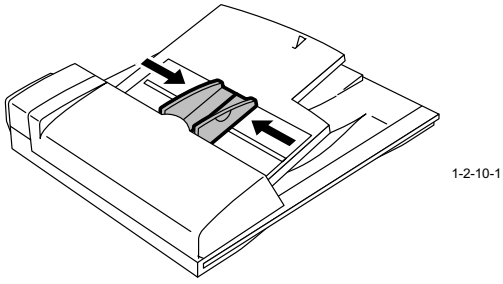

Fig. 1-2-10-1

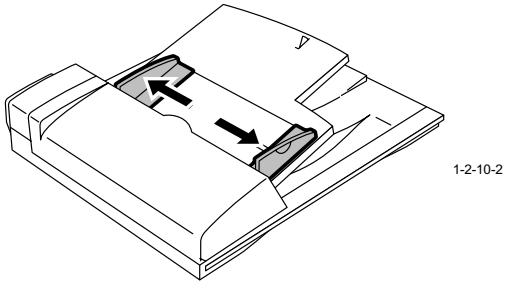

Fig. 1-2-10-2

1.3 Image Quality Control

If the user wants to change the image density, adjust the image density in adjust mode "05."

	Original mode			Adjustment item		Remarks
	Photo/Text	Photo	Text			
Code	503	501	504	Standard PPC	Manual density center value	The larger the value, the darker the image
	505	506	507	Light side	Manual density	The larger the value, the lighter the light range
	508	509	510	Dark side	Manual density	The larger the value, the darker the dark range
	514	512	515	Standard PPC	Automatic density	The larger the value, the darker the image

Follow the procedure below to adjust the image density to suit the user's preferences while comparing the image obtained in the test copy and the currently entered allowable values.

<Keys used in operation>

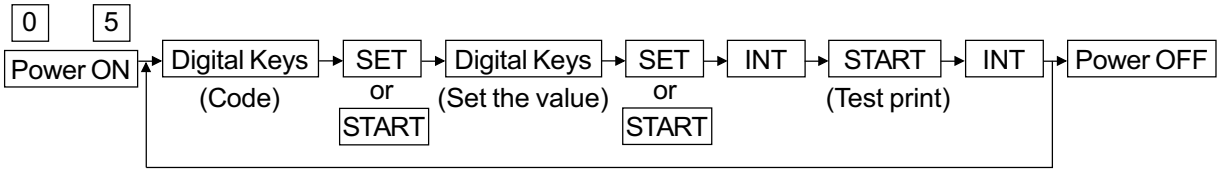

Notes: 1. Adjustment value is able to be input within the range of 0 - 255.

2. Default values are as following.

Code	Default value
501	139
503	133
504	130
505	28
506	18
507	20
508	13
509	20
510	18
512	140
514	133
515	130

1.4 Copy Image Dimension Adjustment

As for the print image adjustment, the adjustment items are listed below. The adjustment should be performed in the following order.

Adjustment item	Code
(1) Aligning value	(450) - (453) (455) - (458) (463) (465)
(2) Printer unit adjustment 1	
a) Primary scanning reproduction ratio Polygonal motor 600 dpi	(400)
b) Primary scanning position Laser starting position 600 dpi	(410) (417) (418) (419) (497)
c) Secondary scanning reproduction ratio Main motor speed fine adjustment	(421)
d) Secondary scanning position Registration	(440) (441) - (445)
(3) Scanner unit adjustment	
a) Primary scanning position CCD primary scanning deviation	(306)
b) Secondary scanning reproduction ratio Scanner secondary scanning reproduction ratio	(304)
c) Secondary scanning position Scanner secondary scanning deviation	(305)
d) Top margin	(430)
e) Left margin	(431)
f) Right margin	(432)
g) Bottom margin	(433)

1.4.1 Adjustment of paper aligning value

<Procedure> (Use code 450 - 453, 455, 456, 457, 458, 463, 465 in the "05" mode.)

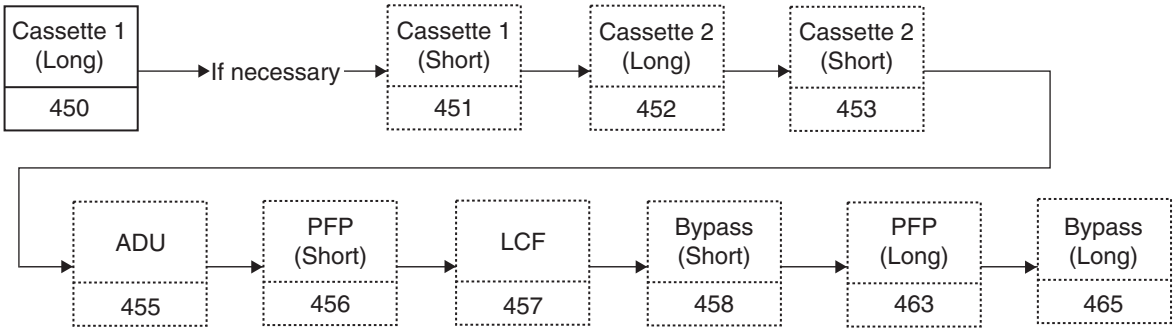

(1)

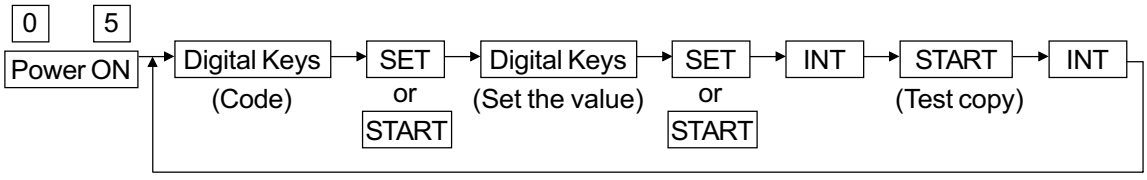

(2) Check the copy for image void and if there is any, reduce the new value to "31" → "30" → "29"... until no void occurs. Check for paper misfeeding.
When the aligning value is increased, noise caused by the paper scraping against the Mylar may possibly be increased.

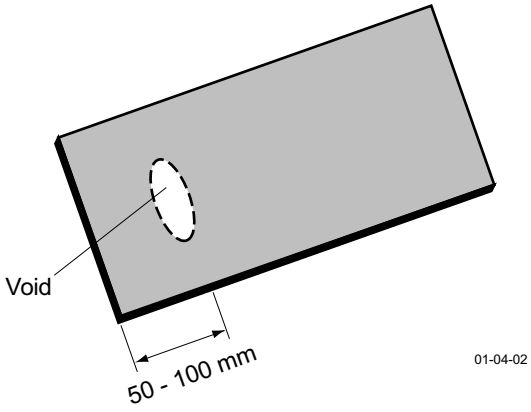

(3) For the LCF, ADU and bypass, the same procedure can be used.

Notes: 1. When frequent paper jams occur near the aligning roller caused by using special thin paper other than that specified, the aligning value can be changed (reduced) as a measure. However, when the aligning value is reduced excessively, this may possibly cause the registration to be shifted. Therefore, make sure that no registration shifting occurs while adjusting the value.
2. Long size adjustment is used as the base when there are both long and short adjustments.
3. Adjusts the code only for option attached.

* As a tentative countermeasure, the service life of the feed roller can be extended by increasing the aligning amount.

1.4.2 Printer unit adjustment

a) Polygonal motor 600 dpi (Primary scanning reproduction ratio of the printer unit)

(1) Set 0 for codes 430 to 433 of the margin setup in 05: Adjustment mode.

(2) Make a test print and adjustment as in the following procedure.

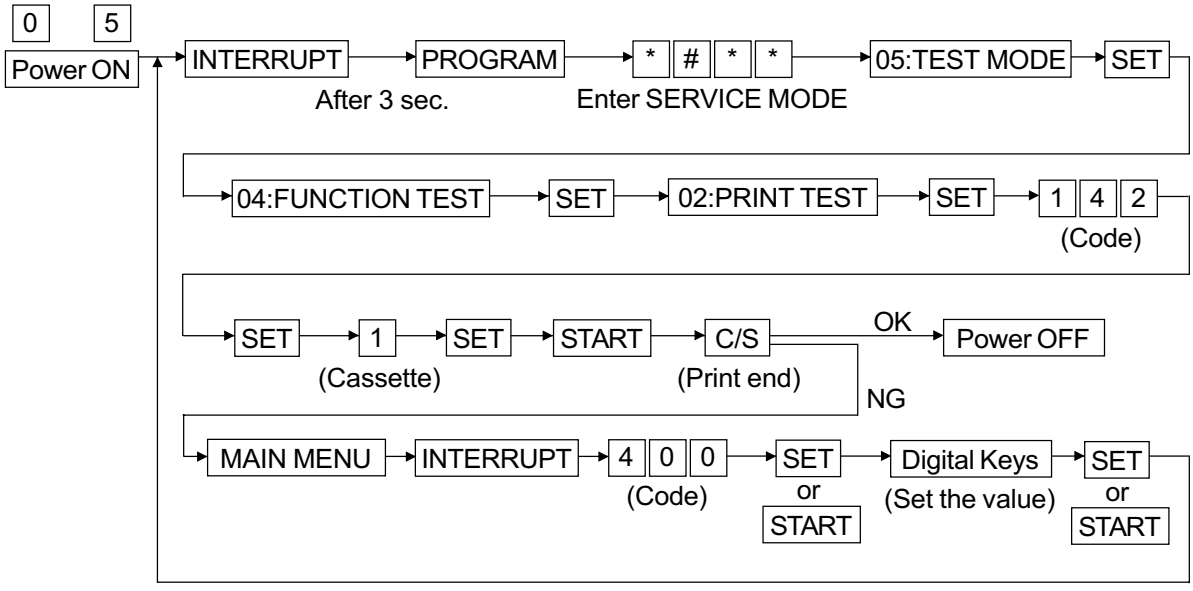

(3) Measure the distance "A" which is the distance between the 5th line and 15th line from the left side of the test print paper against the direction of the paper movement.

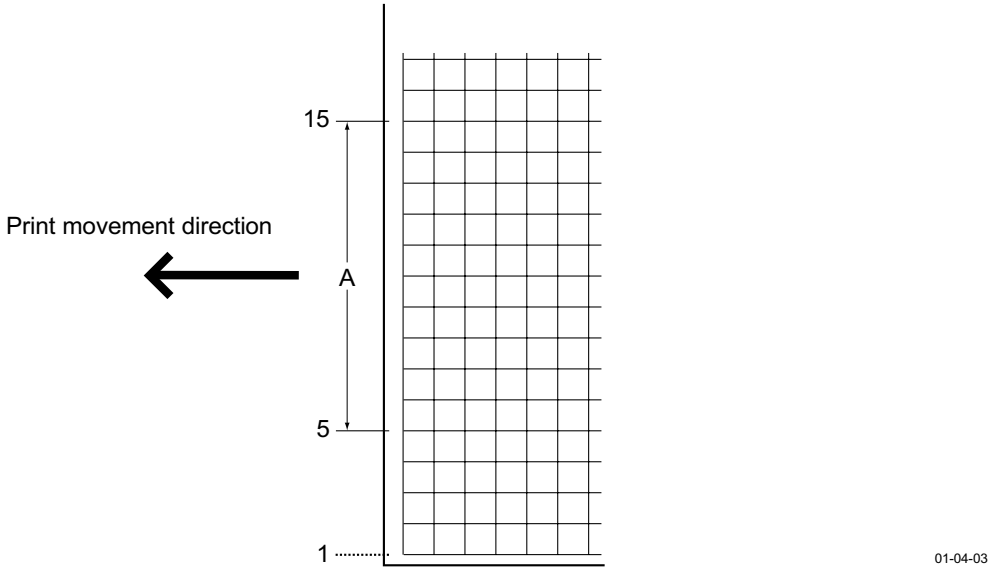

(4) In order to set the distance "A" to 100 mm.

Notes: 1. A decrease in the value lengthen the distance "A". (0.2 % step)

2. Adjustment value is effective within the range of 108 - 148.
The default adjustment value is 128.

b) Laser starting position 600 dpi/PPC

(1) Make a test print and adjustment as in the following procedure.

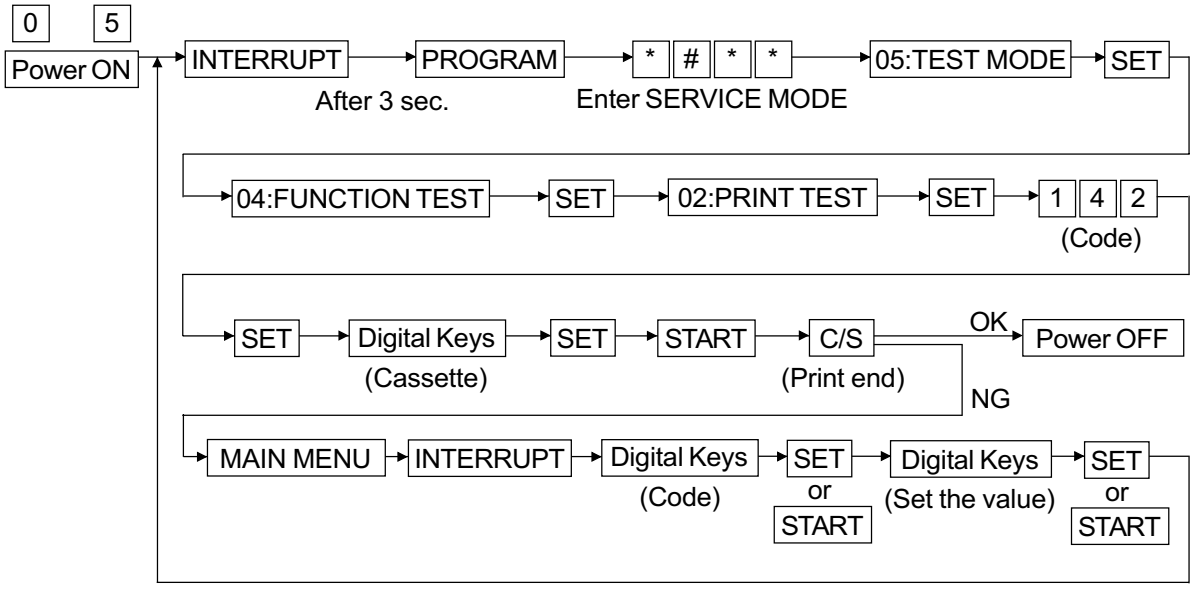

(2) Measure the distance "B" which is the distance from the left side of the test print paper to the 6th line.

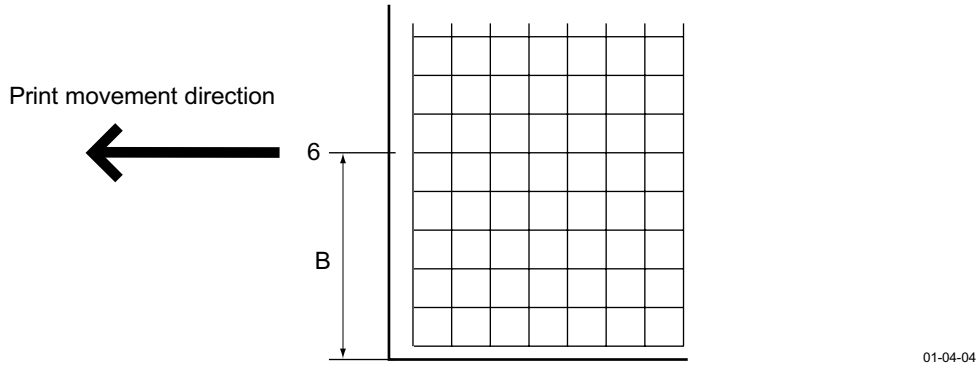

(3) In order to set the distance "B" to 50 mm.

Notes: 1. An increase in the value makes the distance B longer.

2. The adjustment is made for each paper cassette. Paper cassette selection values (1) and corresponding codes (3) in paper cassette adjustment.

3. Adjustment value is able to be input within the range of 0 - 255.

Paper cassette	Cassette selection value	Code	Default	Step
Cassette 1	1	410	108	0.043 mm
Cassette 2	2	417	106	
Cassette 3/LCF	3	418	119	
Cassette 4	4	419	128	
Bypass	0	497	101	

c) Main motor speed fine adjustment (Secondary scanning reproduction ratio of the printer unit)

(1) Make a test print and adjustment as in the following procedure.

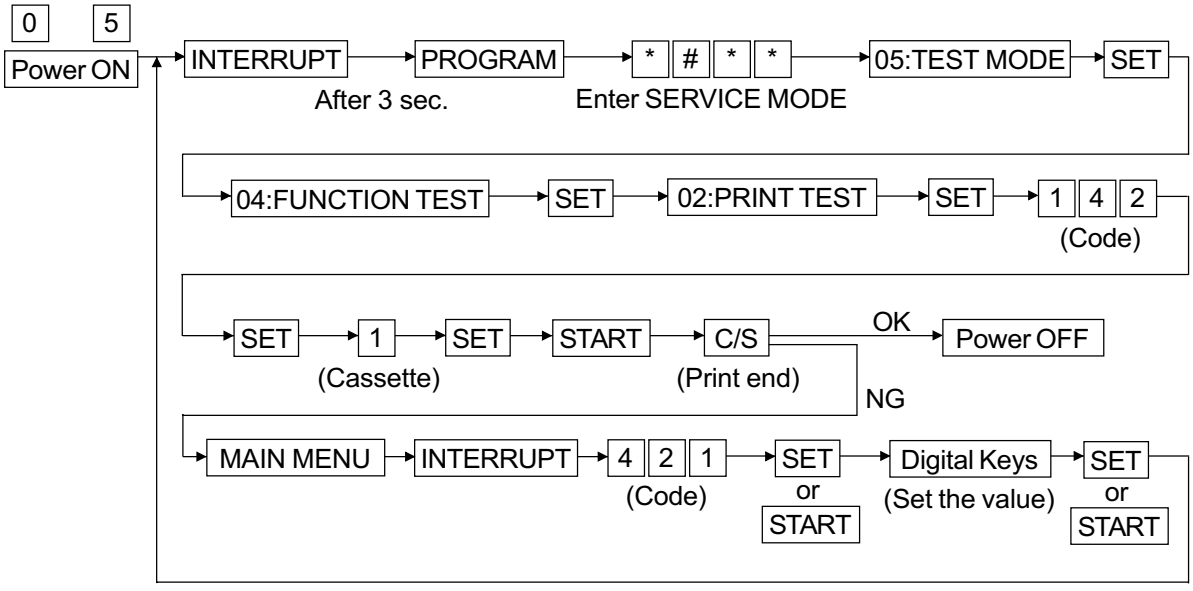

(2) Measure the distance "C" which is the distance between the 5th line and 15th line from the leading edge of the test print paper.

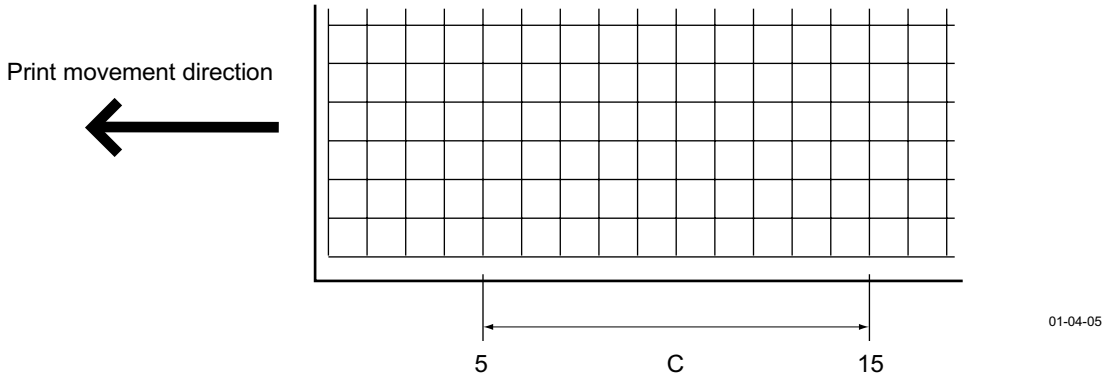

(3) In order to set the distance "C" to 100 mm.

Notes: 1. A decrease in the value lengthen the distance "C" (0.1 %/step).

2. Adjustment value is able to be input within the range of 78 - 178.
The default adjustment value is 124.

d) Registration

< Adjustment order >

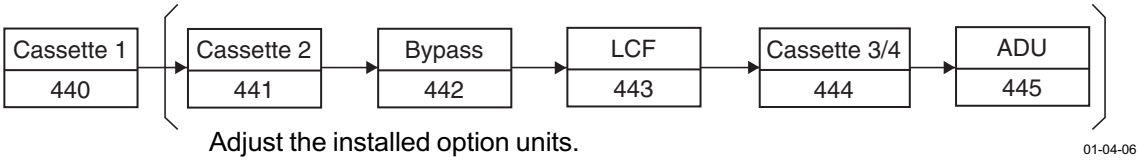

< Adjustment procedure >

(1) Make a test print and adjustment as in the following procedure.

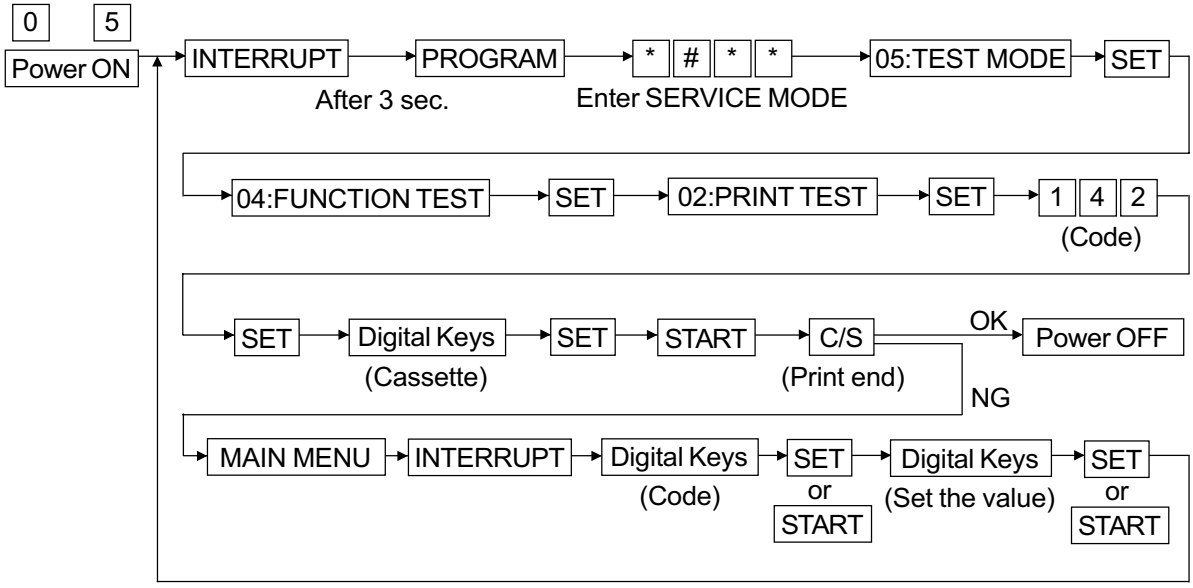

(2) Measure the distance "D" which is the distance to the 6th line from the leading edge of the test print paper.

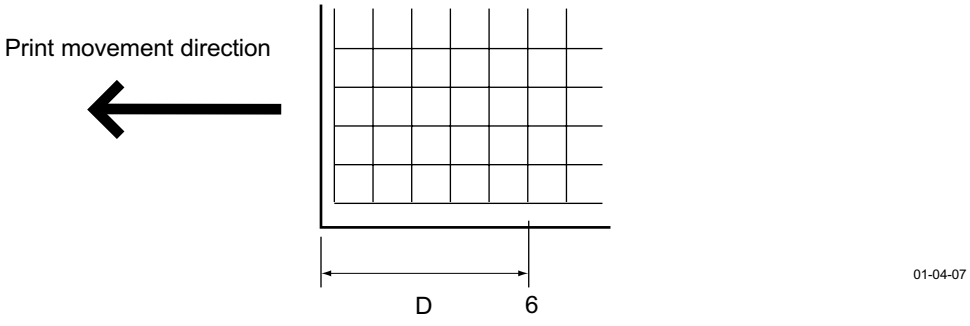

(3) In order to set the distance "D" to 50 mm.

Notes: 1. An increase in the value increases the distance "D" (0.4 mm/step).

2. Adjustment value is able to be input within the range of 0 - 15. Default adjustment value is 8. In case of the cassette 1 feeding (Code "440"), adjustment value is within the range of 0 - 40 (Default adjustment value is 23).
3. Since the cassette 1 adjustment value becomes a standard for all adjustments, this adjustment must always be performed in the order stated above.
4. The adjustment is made for each paper cassette. Paper cassette selection values (1) and corresponding codes (3) in paper cassette adjustment.

Paper cassette	Cassette selection value	Code
Cassette 1	1	440
Cassette 2	2	441
Cassette 3/4	3/4	444
Bypass	0	442
LCF	3	443

5. To confirm the adjustment of ADU (code 445), do not print a test print in the procedure in (1), but copy the TEST CHART.

1.4.3 Scanner unit adjustment

a) CCD primary scanning deviation

(1) Place the scale (its end to the rear side original scale and its side to the left side original scale) on the original glass and make an A4/LT 100% copy.

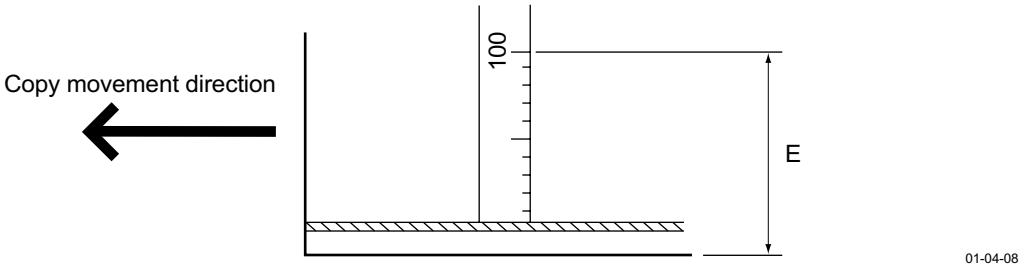

(2) In order to correct the distance "E", which should be 100 mm from the position copied to the bottom of the paper, adjust as follows.

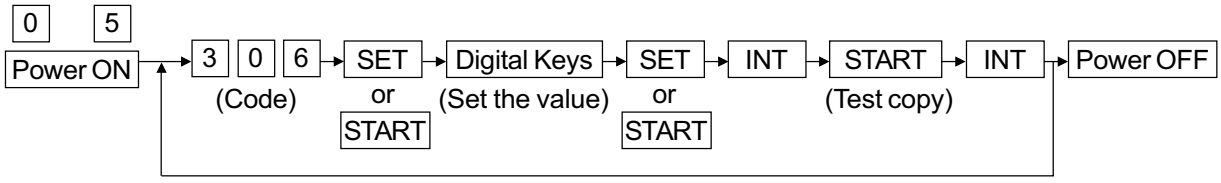

Notes: 1. An increase in the value makes the image shift to the paper edge (0.04233 mm/step).

2. Adjustment value is able to be input within the range of 5 - 251.
The default adjustment value is 128.

b) Secondary scanning reproduction ratio

(1) Place the scale (horizontal to the copy movement direction) and make an A3/LD 100% copy.

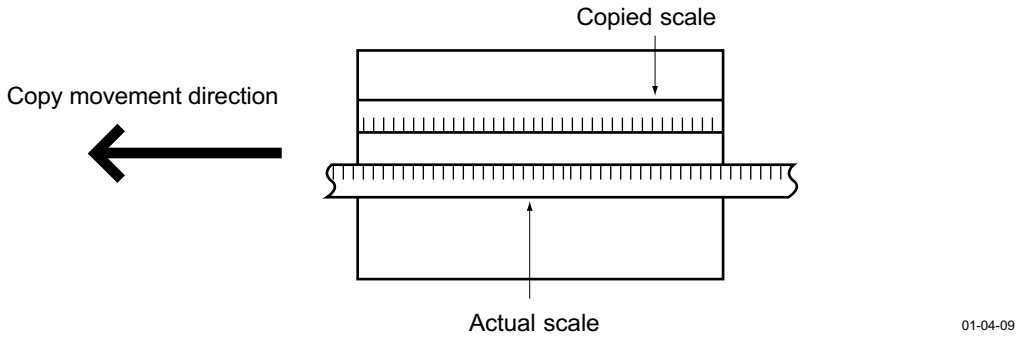

(2) Compare the copy and the scale.

(3) In order to adjust the divisions of the scale, do as follows.

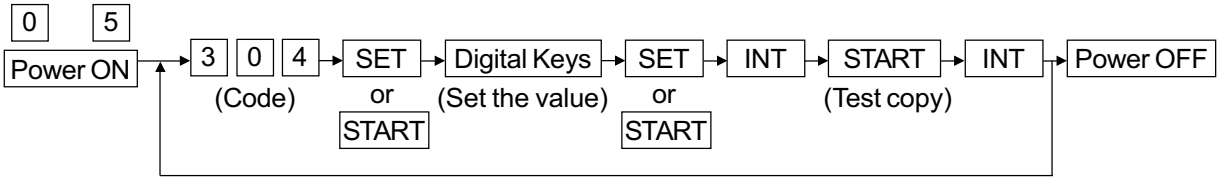

Notes: 1. An increase in the value corresponds to an increase in the division of scale (0.1 %/step).

2. Adjustment value is able to be input within the range of 0 - 255.
The default adjustment value is 128.

c) Scanner secondary scanning deviation

(1) Set 0 for the top margin adjustment value.

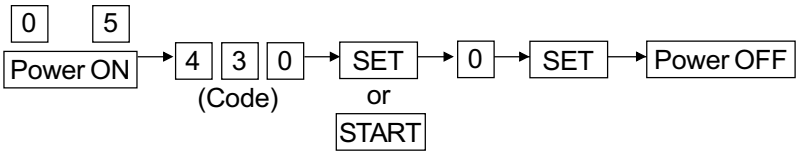

(2) Place the scale (its end to the left side original scale) on the original glass and make an A3/LD 200% copy.

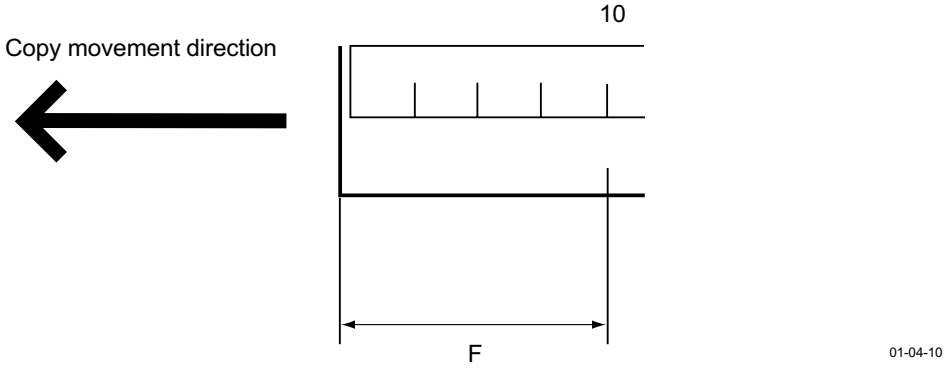

(3) In order to correct the distance "F", which should be 20 ±0.5 mm from the leading edge of the paper, adjust as follows.

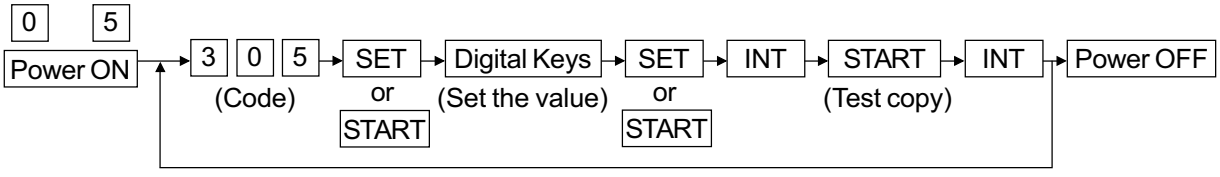

Notes: 1. An increase in the value makes the image move to the trailing edge (0.126 mm/step).

2. Adjustment value is able to be input within the range of "120 - 136".
The default adjustment value is 128.

d) Top margin

(1) While the original cover remains open, make an A4/LT 100% copy.

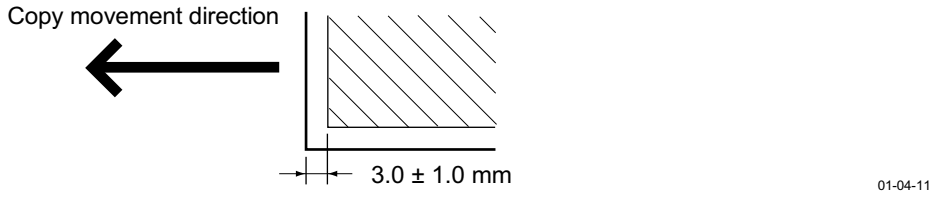

(2) To establish a 3.0 ± 1.0 mm blank space on the leading edge of the copy, adjust using the following procedure.

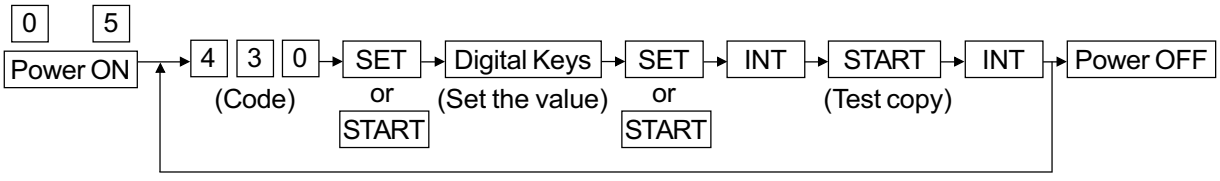

Notes: 1. An increase in the value corresponds to an increase in the blank image (0.7 mm/step).

2. Adjustment value is able to be input within the range of 0 - 30.
   The default adjustment value is 0.

e) Left margin

(1) While the original cover remains open, make an A4/LT 100% copy.

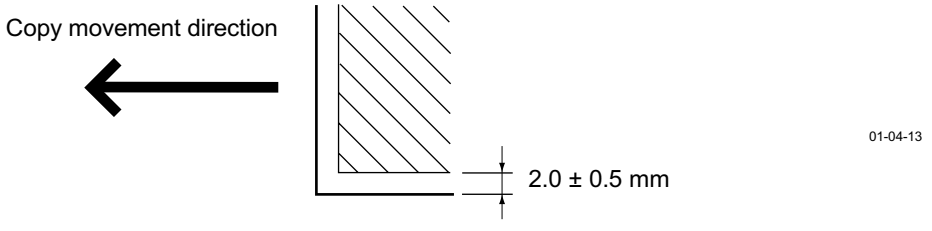

(2) To establish a 2.0 ± 0.5 mm blank space on the left side of the copy, adjust using the following procedure.

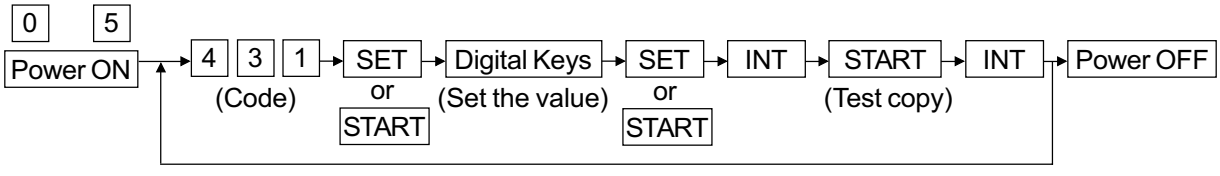

Notes: 1. An increase in the value corresponds to an increase in the blank image (0.1 mm/step).

2. Adjustment value is able to be input within the range of 0 - 255.
   The default adjustment value is 0.

f) Right margin

(1) While the original cover remains open, make an A4/LT-100% copy.

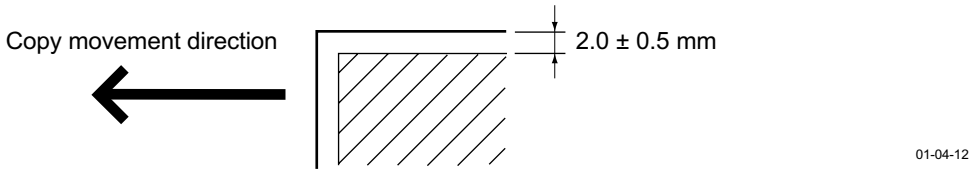

(2) To establish a 2.0 ± 0.5 mm blank space on the right side of the copy, adjust using the following procedure.

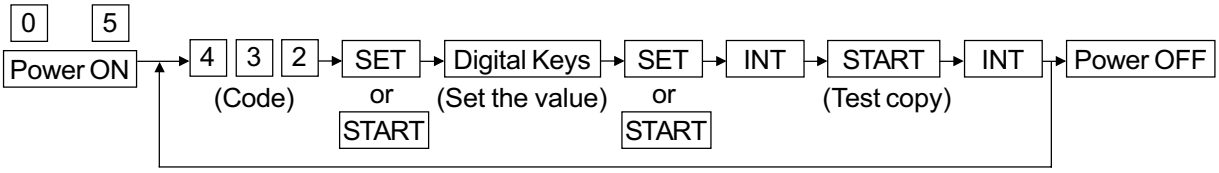

Notes: 1. An increase in the value corresponds to an increase in the blank image (0.1 mm/step).

2. Adjustment value is able to be input within the range of 0 - 255.
The default adjustment value is 0.

g) Bottom margin

(1) While the original cover remains open, make an A4/LT-100% copy.

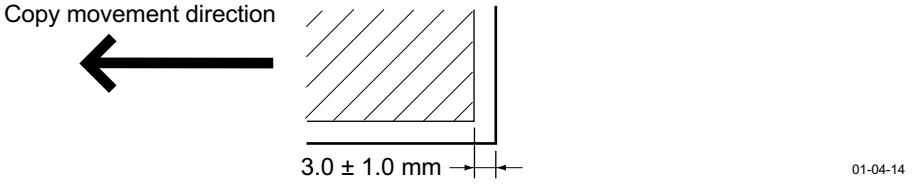

(2) To establish a 3.0 ± 1.0 mm blank space on the trailing edge of the copy, adjust using the following procedure.

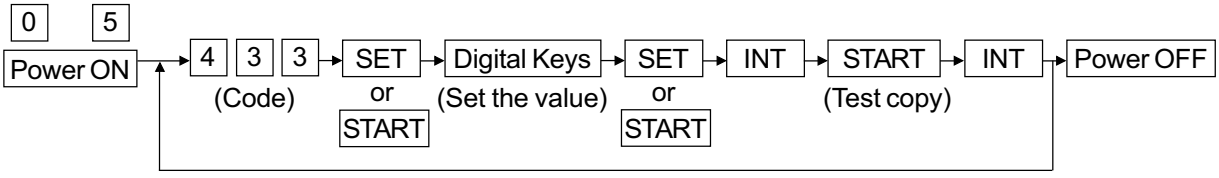

Notes: 1. An increase in the value corresponds to an increase in the blank image (0.1 mm/step).

2. Adjustment value is able to be input within the range of 0 - 255.
The default adjustment value is 0.

1.5 Sharpness (HPF) Adjustment

If the user wants to change the image sharpness to softer or harder, adjust the HPF intensity in adjust mode "05".

	Image mode			Adjustment item	Remarks
	Photo/Text	Photo	Text		
Code	620	621	622	HPF intensity	No. of units: HPF table number 0: Use of default value 1: Text/Photo mode 2: Photo mode 3: Text mode 4-9: Unused No. of tens: Filter combination intensity 0: Use of default value 1-9: Filter combination intensity (The larger the intensity co-efficient the stronger the in-tensity.)

<Keys used in operation>

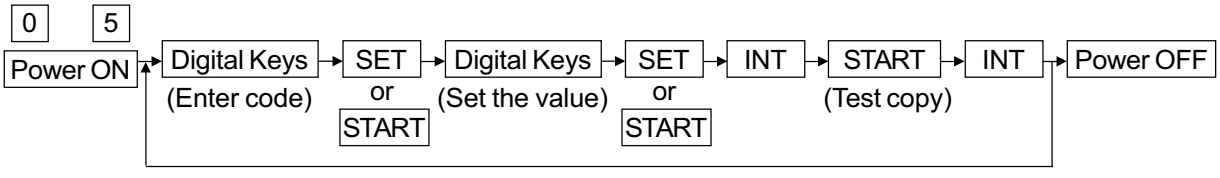

Notes: 1. Adjustment value is able to be input within the range of 0-99.

2. Default value.

Code	Default value
620	1
621	2
622	3

1.6 Gamma Slope Correction

If the user wants to change the gamma curve, adjust the gamma slope correction in adjust mode "05."

	Image mode			Adjustment item	Remarks
	Photo/Text	Photo	Text		
Code	593	594	595	Gamma slope correction	If the value is increased, the image is darkened. (Default value is 0)

<Keys used in operation>

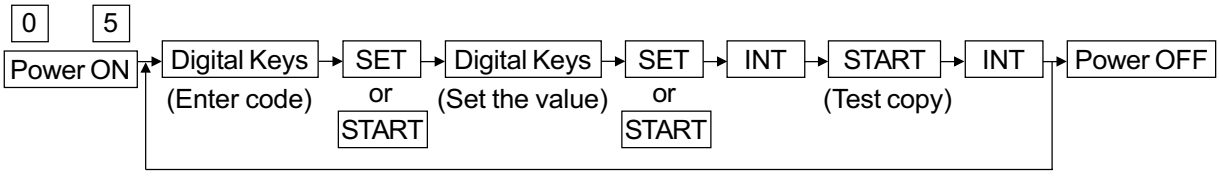

Note: Adjustment value is able to be input within the range of 0 - 9.

1.7 High-Voltage Adjustment

The developer bias, main charger, transfer charger and separation charger outputs must be adjusted when the high-voltage power supply unit is replaced.

1.7.1 Adjustment

(1) Measurement

		Developer Bias	Main Charger	Transfer Charger (On the drum)	Separation Charger (On the drum)
Process Unit		Remove from the copier. (Not use)			
Measuring jig		Not use	Mount on the machine **Note1:** Connect the green cable of the measuring to ground on the copier.		
Digital Tester	(+) terminal	Connect to the bias measuring plate (B) of the machine.	Connect to the main charger cable.	Connect to the red cable of measuring jig.	
	(-) terminal	Connect to frame ground (A).	Connect to the white cable of measuring jig. (Frame grounding)		
	Function switch	DC			
Full scale		1,000 V		2V	
Remarks		Use a digital tester having an input resistance of 10MΩ or more.			
How to turn the power ON		Use the door switch jigs.			
		Developer Bias	Main Charger	Transfer Charger (On the drum)	Separation Charger (On the drum)

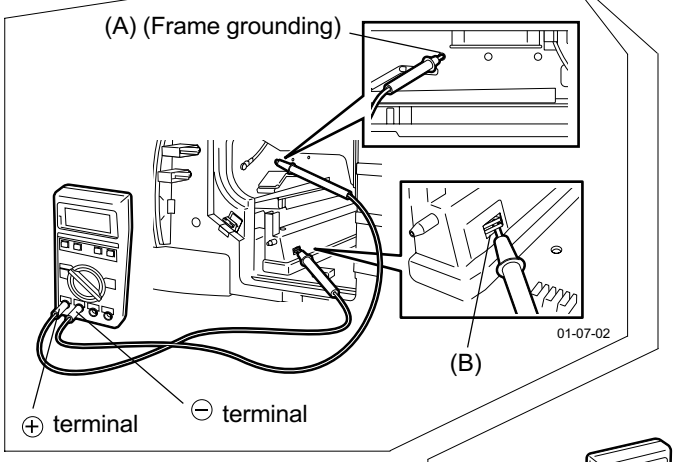

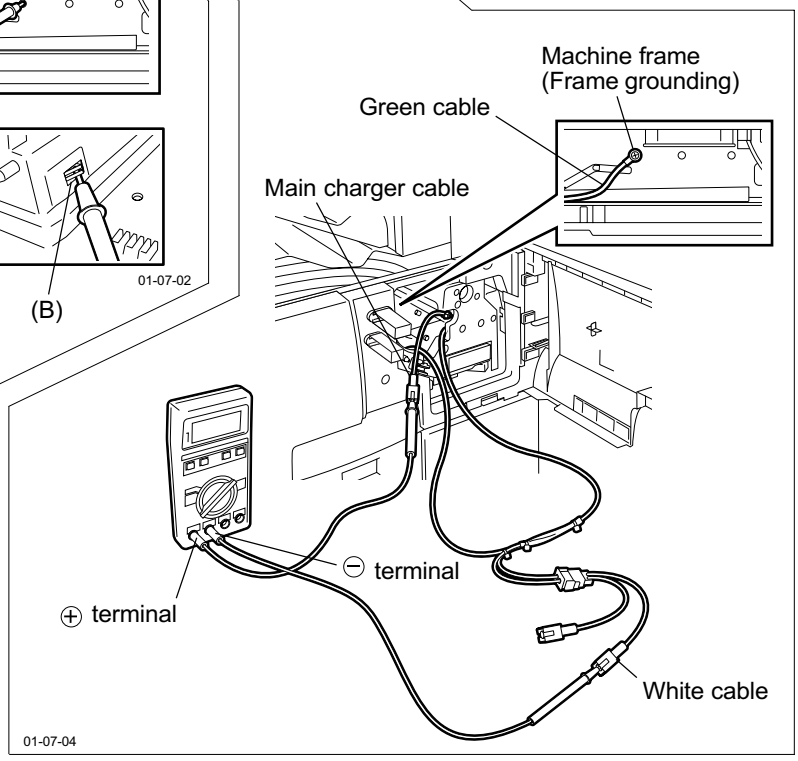

High-Voltage measurement jig

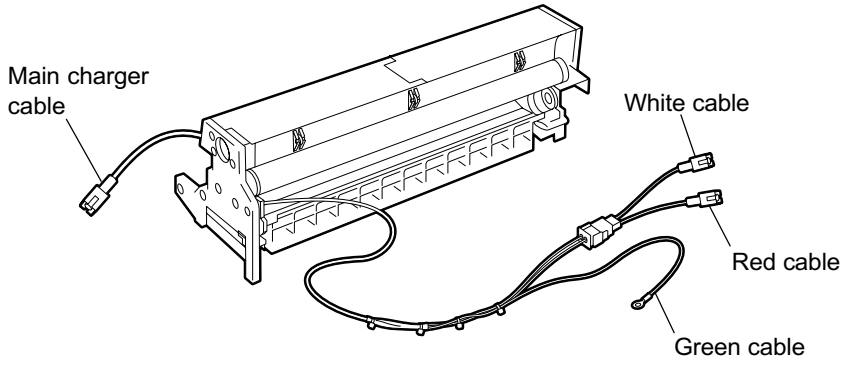

01-07-01

Door switch jigs

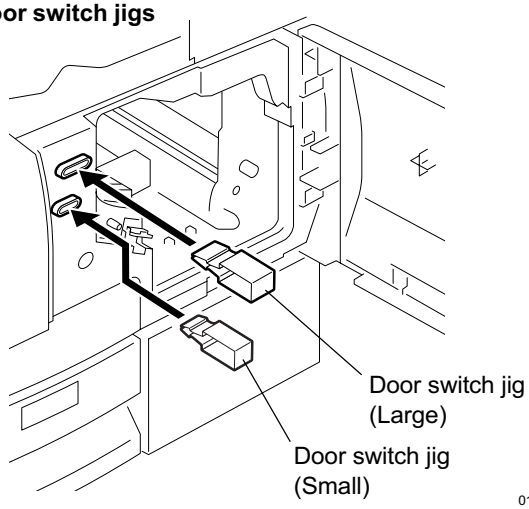

01-07-07

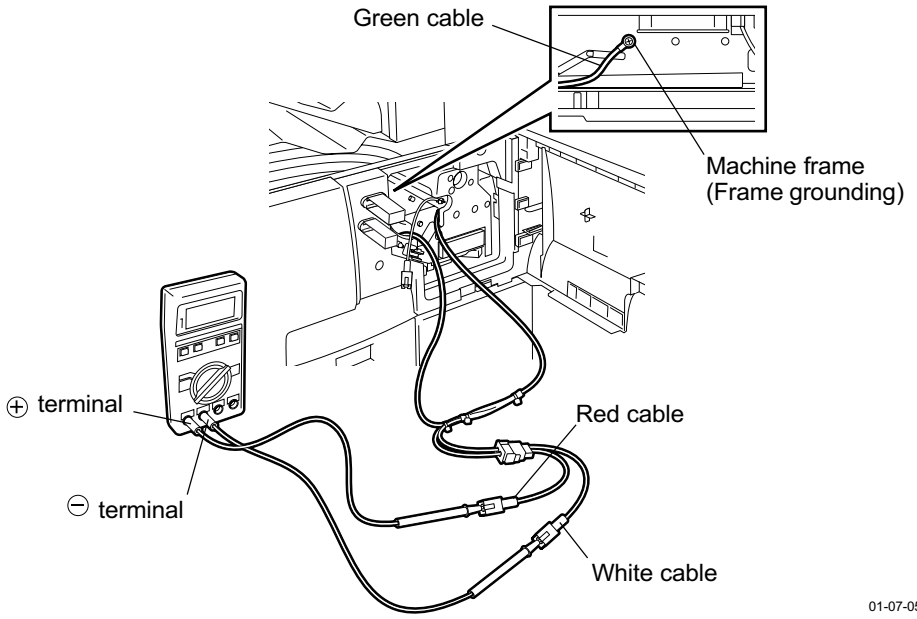

01-07-05

(2) Operation

Note

When adjusting the high-voltage output, a measuring jig is required. (except the developer bias measurement.)

Connect the digital testers as instructed in (1) and follow the procedure below to adjust the developer bias, main charger, transfer, separation output.

<Keys used in operation> **<Display messages>**

0 5

Power ON

```
ADJUST MODE
MC =
```

Digital Keys : Enter code

SET or START

```
ADJUST MODE
MC = XXX
DT =                YYY
```

← : code No.

← : Current entried adjustment value

Digital Keys : Adjust value "YYY" so that the measurement values satisfy the values in the following table.

or

▲ ▼

		Developer Bias	Main Charger	Transfer Charger (On the drum)	
				High	Center
Code		205	210	220	221
Measurement value	e-STUDIO160 series	-430±5V	-637±5V	1372mV ±191mV	1098mV ±146mV
	e-STUDIO200/ 250 series	-460±5V	-674±5V		1179mV ±193mV

		Separation Charger (On the drum)		
		High	Center	Low
Code		233	234	235
Measurement value	e-STUDIO160 series	-553mV	-425mV	-300mV
	e-STUDIO200/ 250 series	±101mV	±51mV	±51mV

SET or START : Value "YYY" after adjustment is stored to SRAM.

CANCEL : Return to other adjustment mode.

Power OFF

1.7.2 Precautions

(1) Developer bias

Caution during Adjustment

If fogging appears over the entire surface even though the grid voltage are appropriate, adjust the developer bias on the control panel. The following defects may occur if the developer bias is lowered too much:

- Image contrast becomes low.
- Image is patchy or blurred.
- Developer carrier adheres to the photosensitive body, making it easier for scratches to occur or the surface of photosensitive body by the cleaner blade.

(2) Transfer

Items to Check before Adjustment

Pockmarks or defective transfer also occur in defects besides transfer output adjustment defects. If this happens, check the following items. If an error is not found after carrying out the following checks, adjust the output.

- Is the charger wire out of position or dirty? Are the transfer guide and roller deformed?
- Are the developer magnetic brushes contacting with the drum?
  Is the process unit rotating during copying? Is the toner low?
- Is the copy paper bending as it is being fed in? Is the copy paper abnormally moist?
- Is the aligning roller rotating normally?
- Is the separation output deviating from the set value?
- Is the developer bias an appropriate value?
- Is the transfer/separation charger case earthed? Is the photosensitive drum (shaft) earthed? Is the transfer/separation transformer earthed?

Caution during Adjustment

① When pockmarks occur:

- If pockmarks are occurring in halftone areas, lower the transfer output value. However, note that if the transfer output value is lowered too far, the transfer performance also will be reduced.

② When defective transfer occurs:

Increase the transfer output value under the following conditions. However, note that if the transfer output value is raised too far, pockmarks will occur.

- If defective transfer occurs even though the charger wire is not dirty.
- If thick paper is frequently used.

The adjustment code varies according to where pockmarks occur. Select the required adjustment code while referring to the following diagram.

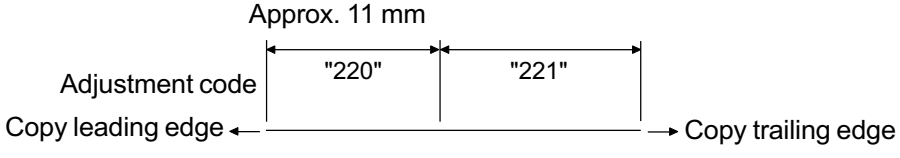

(3) Separation

Items to Check before Adjustment

Defective separation from the drum also occurs in other than separation output adjustment defects. If this happens, check the following items. If an error is not found after carrying out the following checks, adjust the output.

- Is the charger wire out of position or dirty?
- Are the developer magnetic brushes contacting with the drum?
  Is the process unit rotating during copying? Is the toner low?
- Is the copy paper bending as it is being fed in? Is the copy paper abnormally moist?
- Is the alignment roller rotating normally?
- Is the main charger outputting?
- Is the transfer output deviating from the set value?
- Is the transfer/separation charger case earthed? Is the transfer/separation transformer earthed?

Caution during Adjustment

① When defective separation occurs:

Increase the separation output value under the following conditions. However, note that if the separation output value is raised too far, pockmarks will occur, and separation performance will be reduced. (Adjustment code = 233)

- If defective separation occurs even though the charger wire is not dirty.
- If thin paper is frequently used.

② When defective transfer occurs:

- Lower the separation output value when defective transfer occurs. However, note that if the separation output value is lowered too far, the separation performance also will be reduced.

The adjustment code varies according to where the defective transfer occurs. Select the required adjustment code while referring to the following diagram.

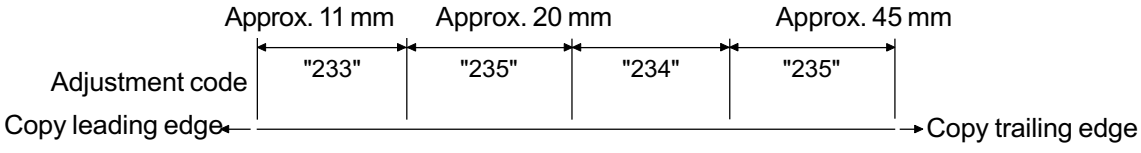

1.8 Adjusting the Scanner Section

1.8.1 Installing glass

(a) Installing ADF glass

To install new ADF glass, wipe off the mounting surface and mount the glass by placing it at the position shown right.

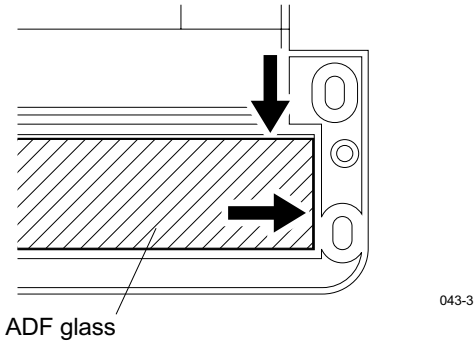

Fig. 1-8-1

(b) Installing original glass

Original glass should be installed in the following manner:

1. Place the ADF glass by aligning with the positioning tab.
2. Hold original glass to the stopper and tighten 4 screws.

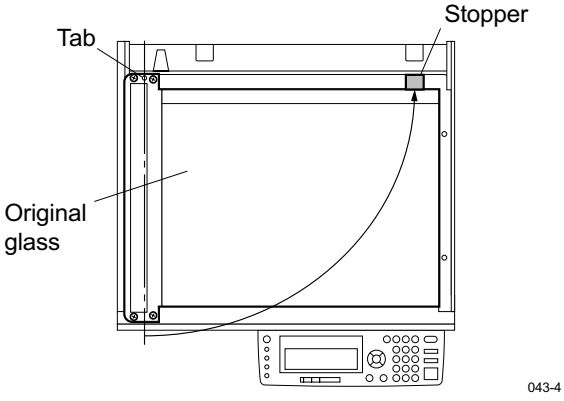

Fig. 1-8-2

3. Hold original glass stay to original glass and tighten 2 screws.

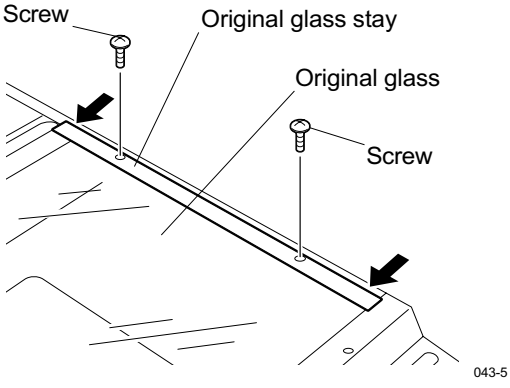

Fig. 1-8-3

(c) Image skewing adjustment

After installing scanner unit, hold the document to the ADF glass and make a copy. Check the image for tilt. If tilt has occurred, make adjustments in the following manner:

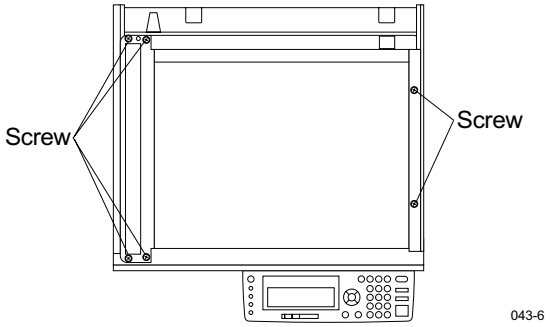

Fig. 1-8-4

1. If an Original Cover (KA-1600PC), ADF (MR-2012), or the RADF (MR-3011) is attached to the copier, detach it.
2. If a STP (KK-1600) is attached to the copier, disconnect the power cable.
3. Detach the manual pocket.
4. Detach top cover.
   (See Fig. 2-6-2 of the Service Manual)
5. Loosen 6 screws retaining original glass.
6. If the tilt is as shown below, loosen 6 screws retaining stopper, move (adjust) original glass stopper plate to the front side, and then secure it.

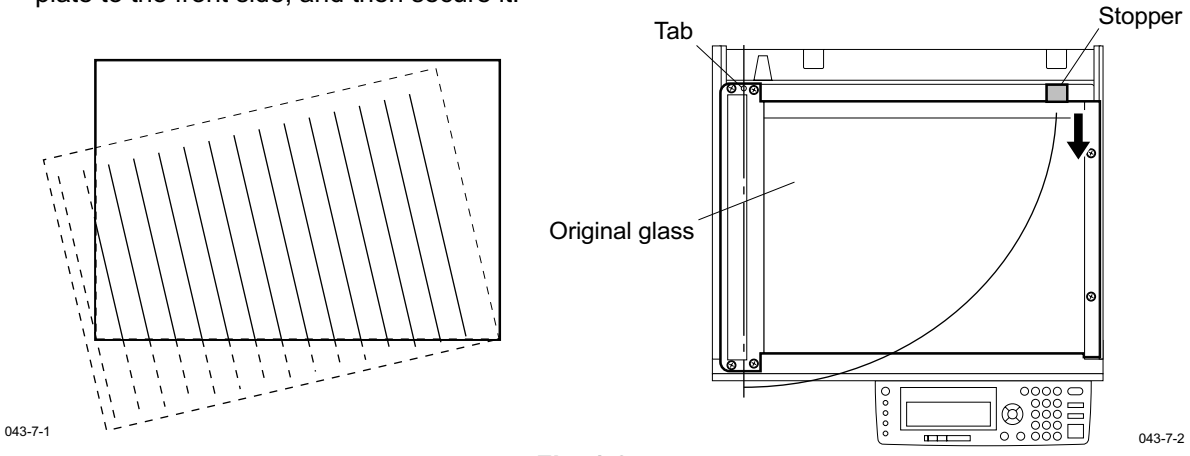

Fig. 1-8-5

7. If the tilt is as shown below, loosen 6 screws retaining stopper, move (adjust) original glass stopper plate to the rear side, and then secure it.

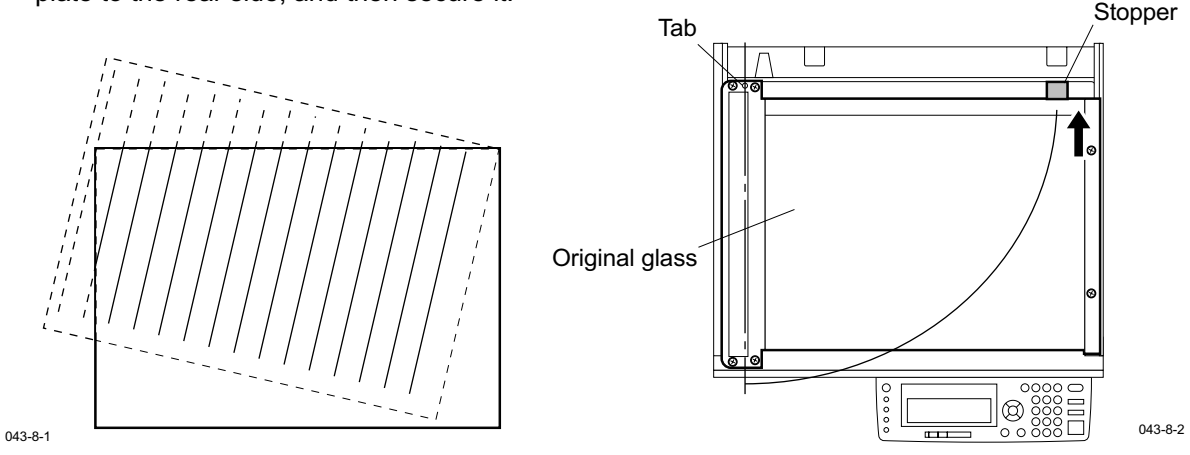

Fig. 1-8-6

1.8.2 Installing the scanner motor

When mounting the scanner motor, adjust the tension of timing belt 142 and timing belt 157 in the following manner.

Note: When mounting, do not mix up the screws.

1. Loosely tighten the scanner motor and scanner motor bracket assembly using 2 screws and mount timing belt 142. (There should be sufficient play to enable the scanner motor and scanner motor bracket assembly respectively to move right-to-left.)
2. Mount the belt tension jig and spring jig (wire). Rotate the scanner motor pulley two to three turns to allow the timing belt and pulley to be securely meshing.
   Secure the 2 screws loosely tightened in step 1.
3. Apply screw lock paint to the 2 screws secured.
4. Remove the belt tension jig and spring jig used in step 2
5. Loosely tighten the scanner motor bracket assembly to the scanner motor assembly using 4 screws.
   (There should be sufficient play to enable the scanner motor bracket assembly to move right-to-left.)
   Mount timing belt 157.
6. Mount the spring jig (belt).
   Rotate scanner motor pulley two to three turns to allow the tooth sides of timing belt 157 and gear to be securely meshing.
   Secure the 4 screws loosely tightened in step 5.
7. Apply screw lock paint to the 4 screws secured.
8. Remove the spring jig used in step 6.

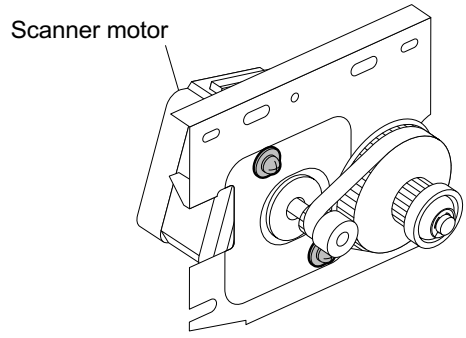

048-3

Fig. 1-8-7

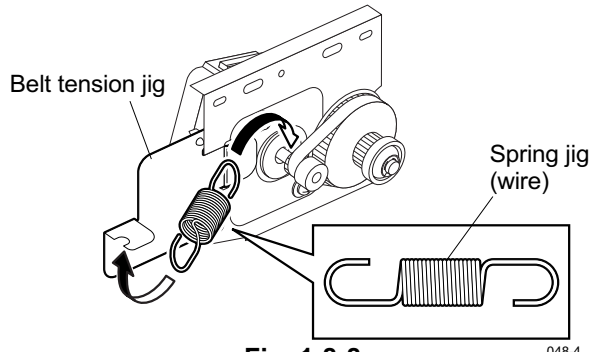

048-4

Fig. 1-8-8

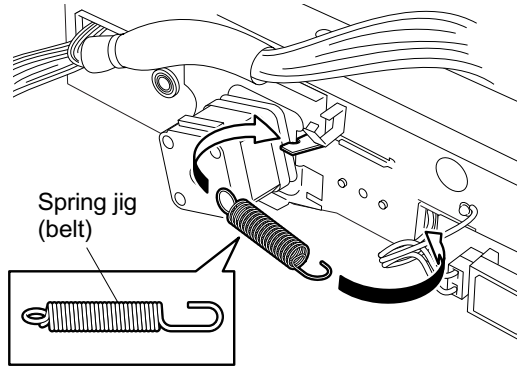

048-5

Fig. 1-8-9

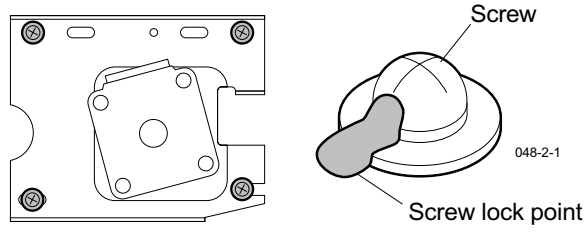

048-6

Fig. 1-8-10

1.8.3 Adjusting the carriage 1

(a) Installing carriage 1

When installing carriage 1, make adjustments in the following manner:

1. Pass the lamp cable over the roller of carriage 2 and place carriage 1 on scanner.
2. Reliably hold the carriage 2 holding part to the left side frame.

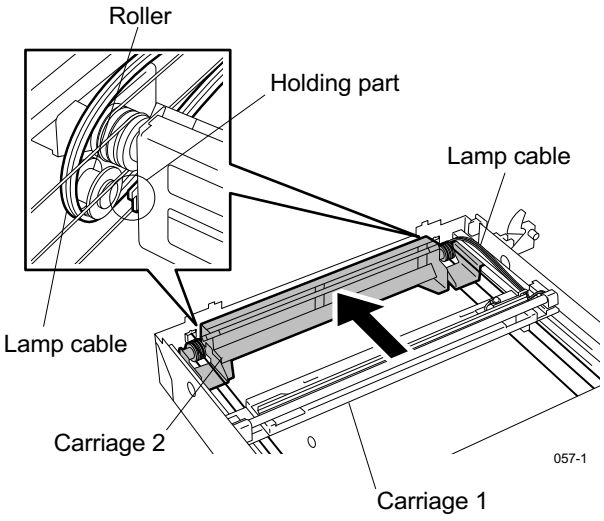

Fig. 1-8-11

3. Securely hold the carriage 1 holding part to the left side frame.
4. Tighten 2 screws to secure carriage 1 to wire.

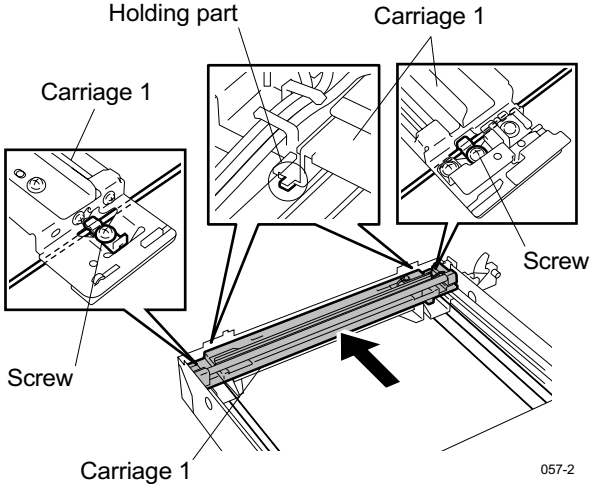

Fig. 1-8-12

(b) Image distortion adjustment

After installing scanner assembly in the copier, make an copy (LD: NAD model, A3: MJD/CND/AUD/ASD/SAD models) and check it for skew. If skew occurs, make adjustments in the following manner:

1. If the skew is as shown below, with carriage 1 securely held to the left side frame, loosen the wire fixing screw on the front side, separate (adjust) the front side of carriage 1, and then secure it.

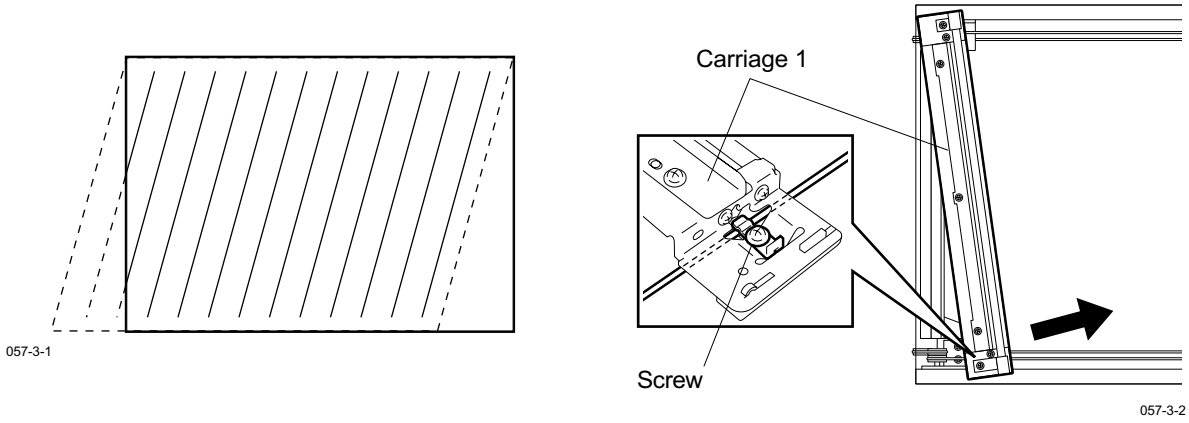

Fig. 1-8-13

2. If the skew is as shown below, with carriage 1 securely held to the left side frame, loosen the wire fixing screw on the rear side, separate (adjust) the rear side of carriage 1, and then secure it.

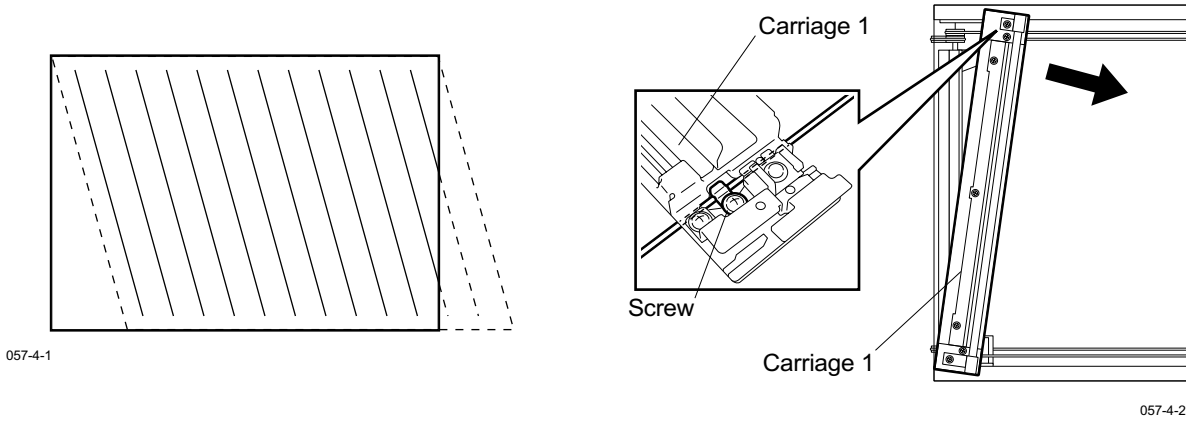

Fig. 1-8-14

1.8.4 Installing carriage 2

(a) Wire tension adjustment

1. Install wire on carriage 2 by winding up as shown below.

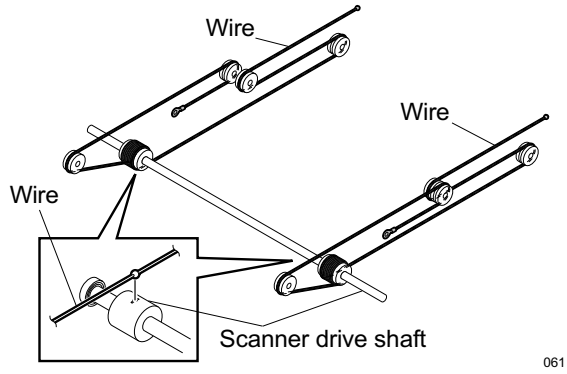

Fig. 1-8-15

2. Remove the clip jig mounted on scanner drive shaft.
3. Place the spring jig (wire) tension gauge on wire holder and scanner drive shaft and then screw it.

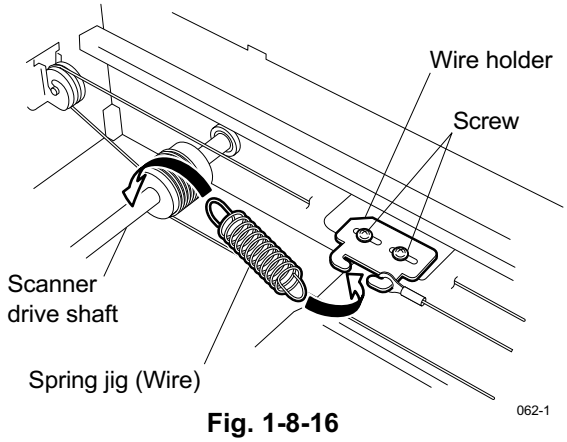

Fig. 1-8-16

4. Remove the spring jig (wire) gauge and loosen 2 screws retaining slide plate.

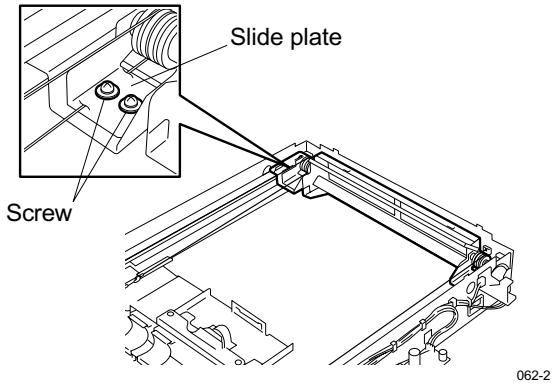

Fig. 1-8-17

5. To take up the winding slack of wire, move carriage 2 back and forth once (to the center of scanner) and securely hold the carriage to the left side frame.
6. Tighten 2 screws to secure slide plate.

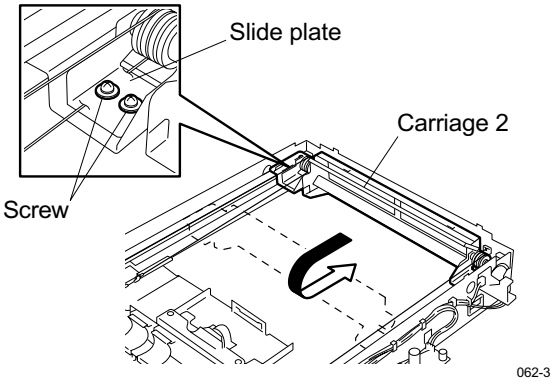

Fig. 1-8-18

7. Apply the screw lock paint to all the screws secured.

(b) Installing the wire to the pulleys

Winding the wire on pulley.

1. Fit the ϕ3.2 spherical terminal at the center of the wire into the hole in the wire winding pulley. Wind up the wires on the front and rear sides, respectively, as shown below and secure the wire with the clip jig to prevent it from getting loose.

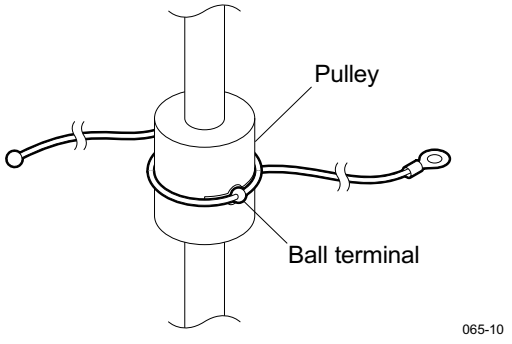

Fig. 1-8-19

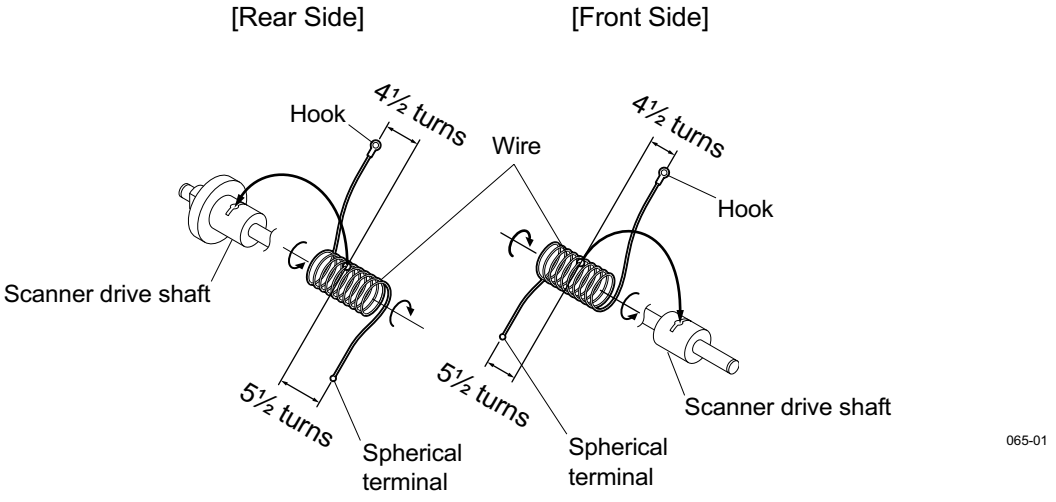

Fig. 1-8-20

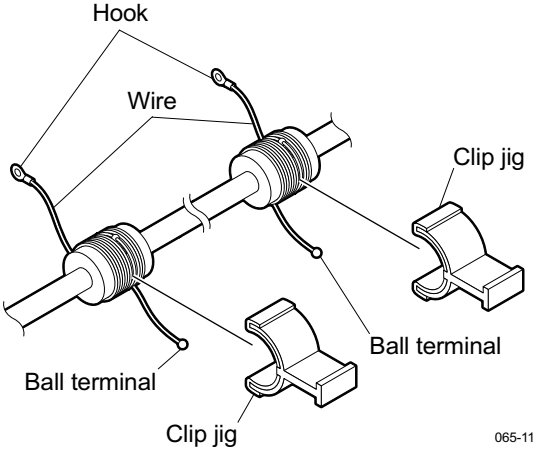

Fig. 1-8-21

Notes:

1. When winding the wire on the pulley, keep the following points in mind.
   - Do not wind the wire while twisting.
   - Tensely wind the wire so that it will be placed in contact with the pulley.
   - Wind the wire without leaving gaps.
   - Be careful not to allow the wound wire to be shifted or come loose.
2. When fitting wire holder jigs, take care so that the turns wound on the pulleys do not move or unwind.

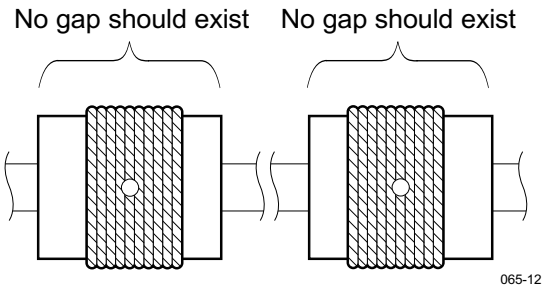

Fig. 1-8-22

<Relationship between wound turns and wire holder jigs>

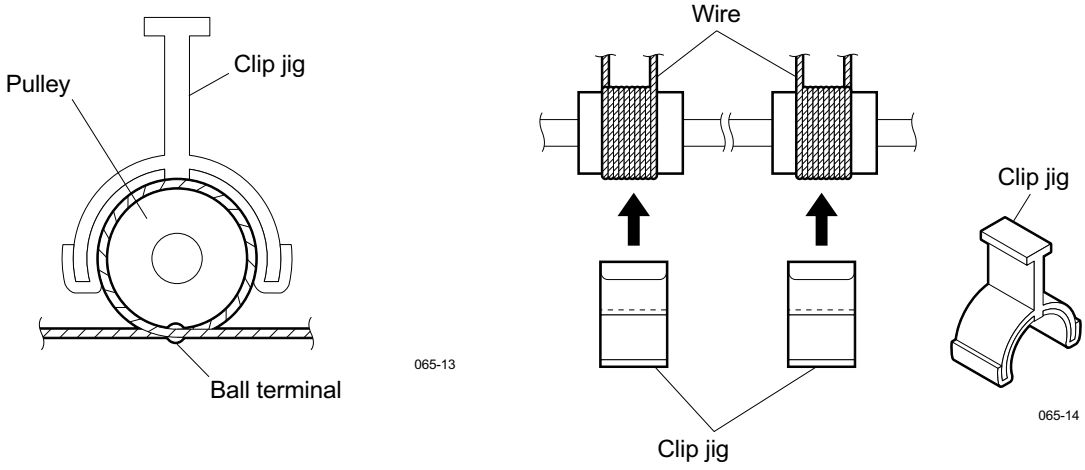

Fig. 1-8-23

1.8.5 CCD unit

(a) Replacing the CCD unit

- Since the lens unit was precisely adjusted at the factory, it must not be readjusted in the field or some of its components must not be replaced. If necessary, the lens unit should be replaced as a unit.
- When replacing the CCD unit, remove the following 3 screws only. Do not loosen or remove other screws.

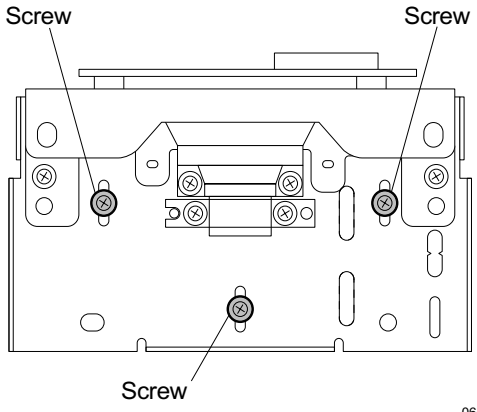

065-15-1

Fig. 1-8-24

- Use sufficient care when handling the lens unit. Never hold the precision-adjusted area of the lens unit.

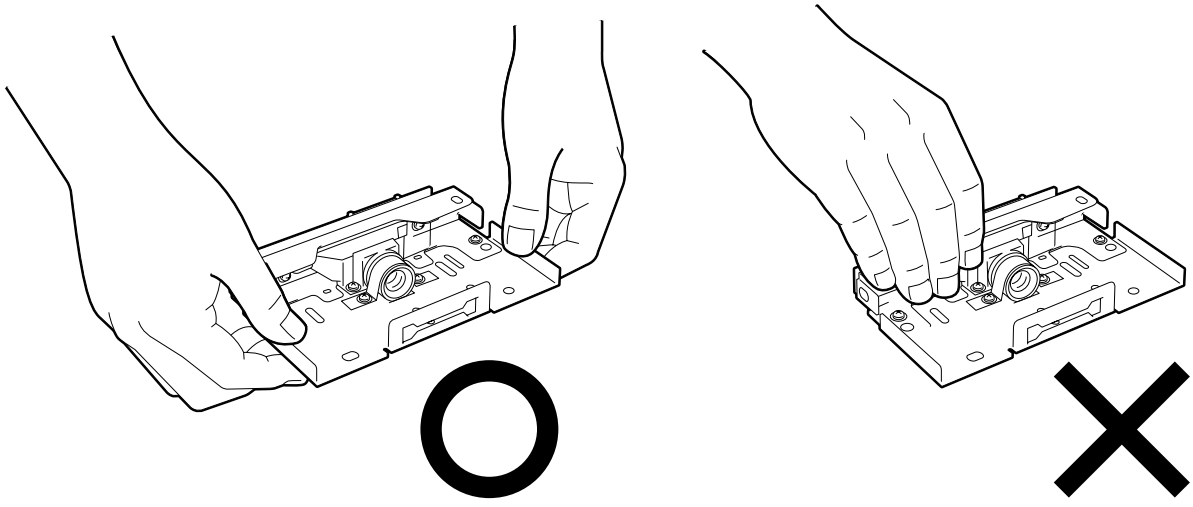

065-17-1 065-18-1

Fig. 1-8-25

(b) Installing CCD unit

When changing CCD unit, install the unit in the following manner:

1. With CCD unit temporarily mounted, set the jig.

Note: When setting the CCD jig, there must be no space between CCD unit and the special CCD jig.

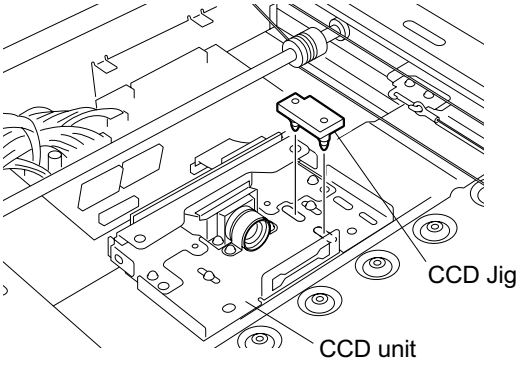

065-03-1

Fig. 1-8-26

2. Adjust the position of CCD unit for the offset value (unit: mm) provided on CCD unit and then secure it with the screw.

Note: Move the unit to the right of the center when the offset value is plus, and to the left of the center when minus. (one division: 1 mm) and then secure CCD unit.

Ex. The figure below shows an example where the offset value is "+2.00."

3. After assembling the copier completely, make a copy of document and check the image.
4. If the copy image is enlarged or reduced, readjust.

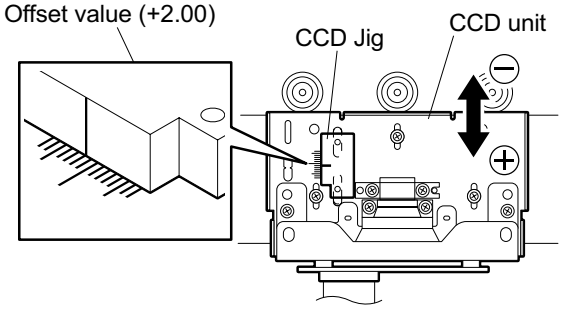

065-04-1

Fig. 1-8-27

(c) Adjusting the CCD unit

1. Remove original glass. (See Fig. 7-8-7 of the Service Manual)
2. Remove the blind plate. (See Fig. 7-8-16 and 7-8-17 of the Service Manual)
3. Place the CCD jig on CCD unit and loosen 3 screws.
4. Using the marks on the scanner base as a guide, adjust the CCD unit in either forward or backward direction.

   The following table shows the error in the reproduction ratio between the copies and actual rulers compared to be measured, and the amount of adjustment of the CCD unit.

Reproduction-ratio error	Amount of adjustment	Reproduction-ratio error	Amount of adjustment
-1.2%	4.77 mm	0.1%	-0.39 mm
-1.1%	4.37 mm	0.2%	-0.78 mm
-1.0%	3.98 mm	0.3%	-1.16 mm
-0.9%	3.58 mm	0.4%	-1.55 mm
-0.8%	3.18 mm	0.5%	-1.94 mm
-0.7%	2.78 mm	0.6%	-2.33 mm
-0.6%	2.39 mm	0.7%	-2.71 mm
-0.5%	1.99 mm	0.8%	-3.10 mm
-0.4%	1.59 mm	0.9%	-3.49 mm
-0.3%	1.19 mm	1.0%	-3.88 mm
-0.2%	0.80 mm	1.1%	-4.26 mm
-0.1%	0.40 mm	1.2%	-4.65 mm
0.0%	0.00 mm		

5. If the copy image is enlarged, move the unit to the right for adjustment.

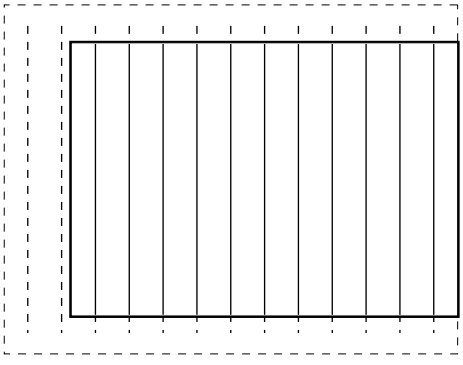

065-04-2

Fig. 1-8-28

6. If the copy image is reduced, move the unit to the left for adjustment.

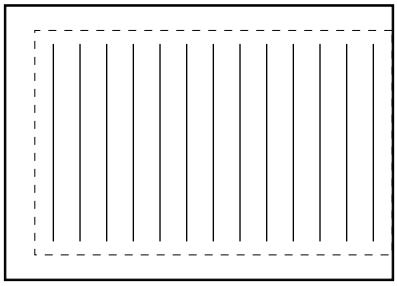

065-04-3

Fig. 1-8-29

7. After adjustment, apply the screw lock paint to 3 screws secured.

1.9 Adjusting the main drive gear assembly

1. Loosen 2 screws (A) retaining the backlash adjusting gear of the main drive gear assembly.
2. Locate the main drive gear assembly in the copier and temporarily tighten 7 screws (B).

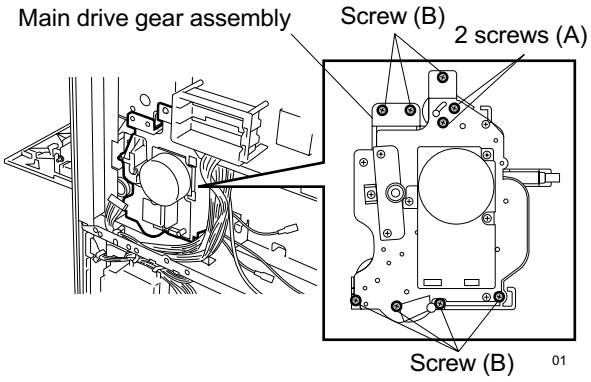

Fig. 1-9-1

3. Loosen one screw and remove the bushing plate.

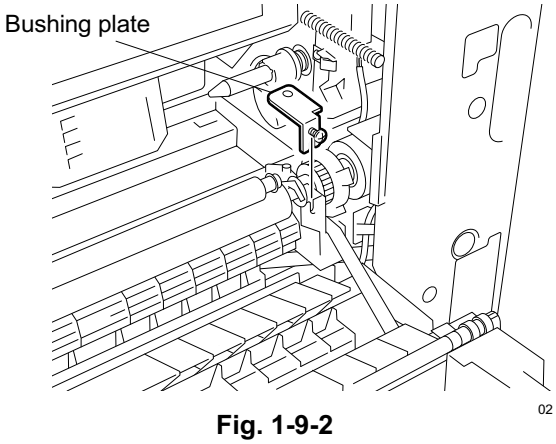

Fig. 1-9-2

4. Place the drive gear jig by aligning with the drum shaft and the process unit positioning stud.

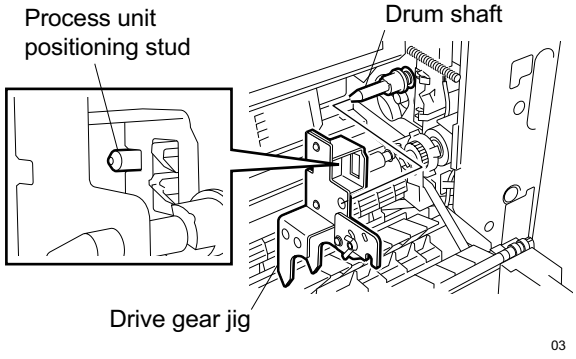

Fig. 1-9-3

5. Loosen the wing screw and hold the drive gear jig arm to the registration roller.
6. Place the tab of the drive gear jig arm in the hole and tighten the wing screw.

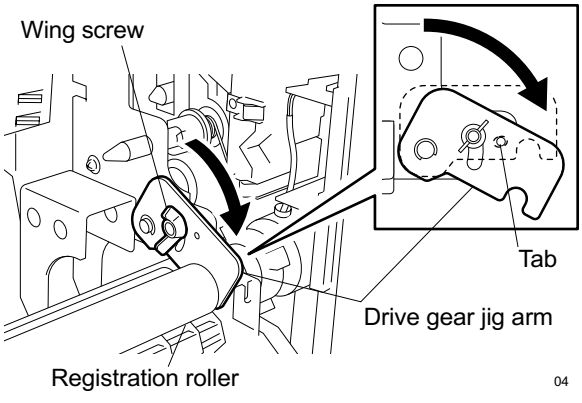

Fig. 1-9-4

7. While pressing down the drive gear jig, tighten 7 finger-tight screws (B) of the main drive gear assembly.
8. Loosen the wing screw, release the tab of the drive gear jig arm, and remove the drive gear jig.

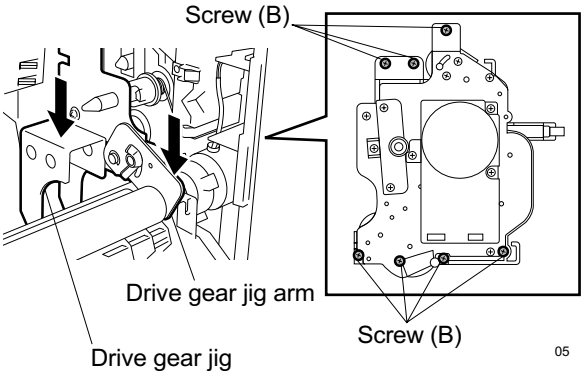

Fig. 1-9-5

9. Mount 2 screws.
10. Mount the bushing plate and tighen 2 screws.

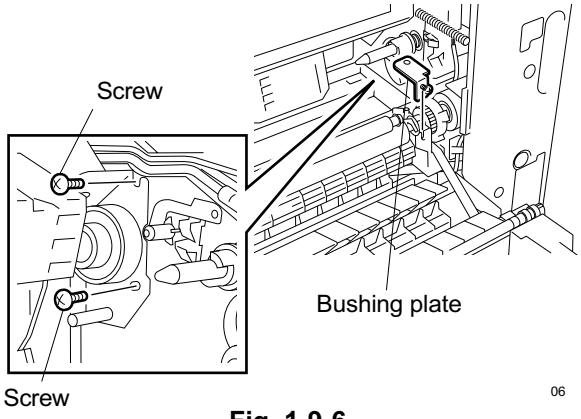

Fig. 1-9-6

11. Turn the main motor counterclockwise two or three times.

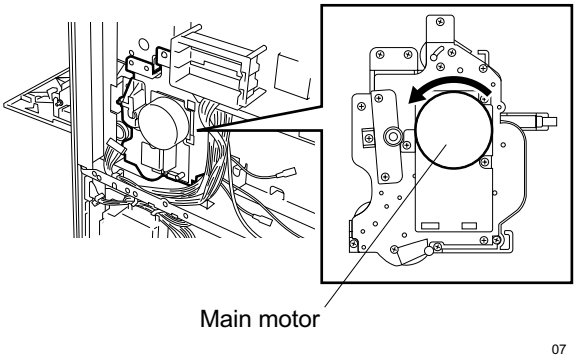

Fig. 1-9-7

12. Release the jam lever of the fuser.

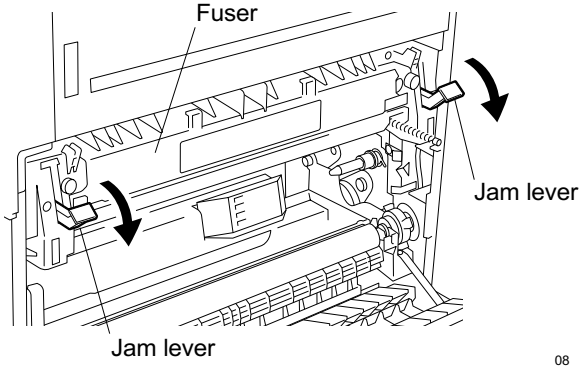

Fig. 1-9-8

13. Slowly rotate the main motor clockwise (2 or 3 turns) until the gear of the fuser unit starts rotating (for e-STUDIO160 series).

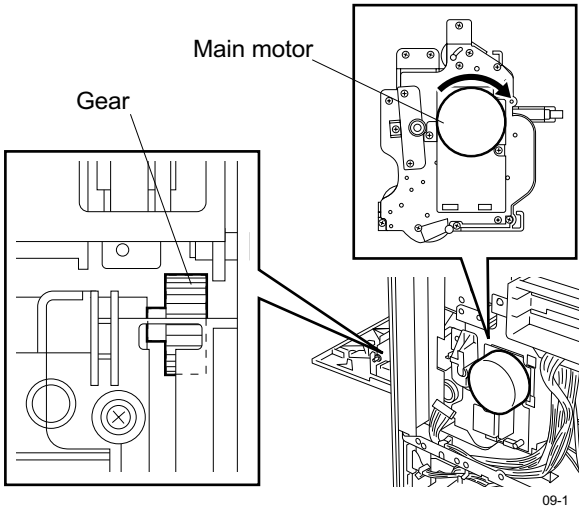

Fig. 1-9-9

14. Slowly turn the main motor clockwise two or three times and check that the stud no longer moves (for e-STUDIO200/250 series).

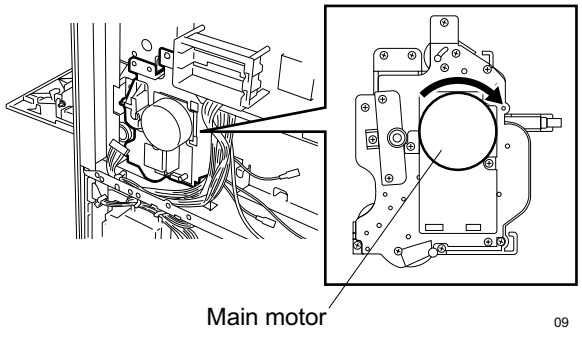

Fig. 1-9-10

15. Lock the jam lever of the fuser.

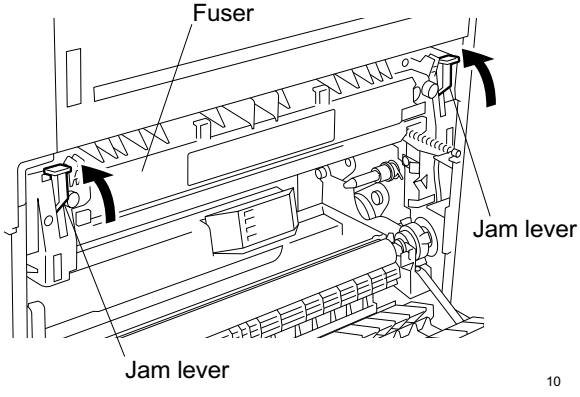

Fig. 1-9-11

16. Tighten the screw (A) while holding the plate so that the place will not be dislodged.

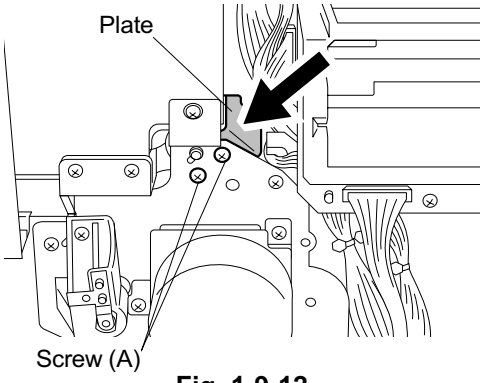

11

Fig. 1-9-12

Note: With the fuser reliably mounted, the collar of the main drive gear assembly should turn with a slight load when it is turned.

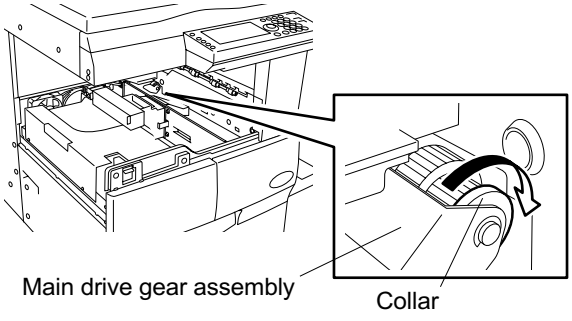

12

Fig. 1-9-13

1.10 MAIN PWA replacement procedure

1. Downloading of the MAIN PWA firmware
   For details, see chapter 5 of the Service Handbook.
2. Execution of 08-388 mode. (Reading of the total counter value)

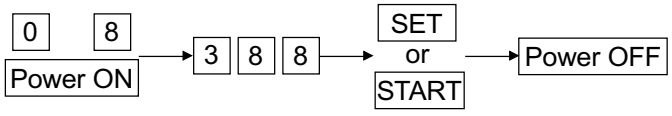

3. RAM Clear with the [1], [3], and [*] keys.

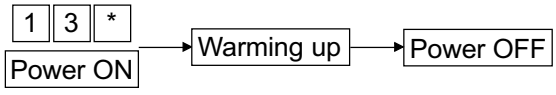

4. Execution of 08-665 mode (05: adjustment clear/08: programming clear)

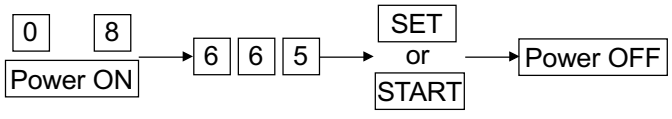

5. RAM Clear with the [1], [3], and [#] keys.

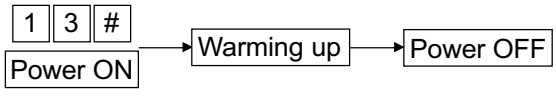

6. Download the scanner PWA firmware, if necessary, after confirming the version of it.
7. Settings for the country code or region code

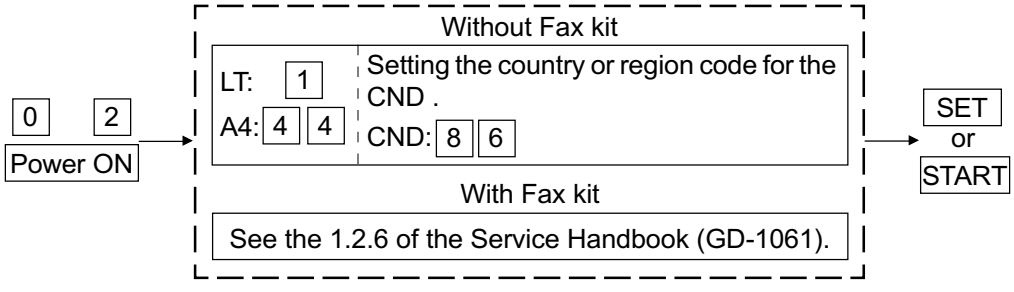

8. Settings for the date and time
   For details, see chapter 5 of the Operator's Manual.

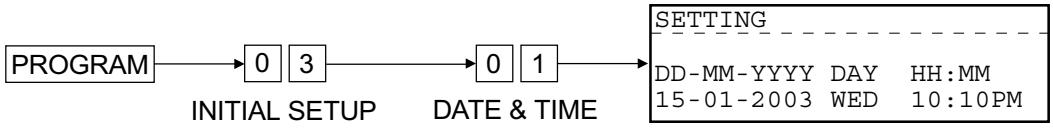

9. Writing in memory (entering the drum counter value (DRUM COUNTER), long size counter value (A3/LD) and short size counter value (A4/LT)).
   For the setting value, refer to the DRUM UNIT LIST printed before replacing the MAIN PWA.
   When the DRUM UNIT LIST is not printed, perform the following setting.

Drum counter value:	Find a remainder by dividing the total counter value (08-351) by the process unit life value (27k or 33k). Enter the value obtained by multiplying the remainder by 10.
Long size counter value:	Enter "0."
Short size counter value:	Enter the remainder obtained by dividing the total counter value (08-351) by the process unit life value (27k or 33k).

   For the setting procedures, refer to section 1.2.5 of the Service Handbook.

10. Entering the adjustment value for the printing position.

    Enter the setting value for the following 21 items.

    For the setting values, refer to the FUNCTION LIST printed before replacing the MAIN PWA, or the FUNCTION LIST on the inside of the rear cover of the copier.

    When the FUNCTION LIST is not printed in 08-404/401/251/252, perform the following setting.

    08-404: Enter the remainder obtained by dividing the total counter value (08-351) by the process unit life value (27k or 33k).

    08-401: Find a remainder by dividing the total counter value (08-351) by the process life unit value (27k or 33k).
    Enter the value obtained by multiplying the remainder by 4.7 (for e-STUDIO160/200 series) or 4.5 (for e-STUDIO250 series).

    08-251: When it was set before the MAIN PWA was replaced, perform the setting again.

    08-252: Enter the remainder obtained by dividing the total counter value (08-351) by the PM life value (81k or 99k).

    When 08-251 is “0,” however, it is not necessary to enter the 08-252 value.

    For the setting procedures, refer to sections 1.2.1 and 1.2.2 of the Service Handbook.

    1: 05-205 (Developer bias DC adjustment)
    2: 05-210 (Grid voltage initial value adjustment)
    3: 05-220 Transfer H
    4: 05-221 Transfer C
    5: 05-233 Separation H
    6: 05-234 Separation C
    7: 05-235 Separation L
    8: 05-400 (Printer primary scanning reproduction ratio)
    9: 05-410 (Laser start position)
    10: 05-421 (Printer secondary scanning reproduction ratio)
    11: 05-440 (Leading edge)
    12: 05-430 (Top margin)
    13: 05-431 (Left margin)
    14: 05-432 (Right margin)
    15: 05-433 (Bottom margin)
    16: 08-404 (Developer material counter)
    17: 08-401 (Drum life counter)
    18: 08-251 (PM counter setting value)
    19: 08-252 (PM counter present value)
    20: 08-446 Transfer ON position
    21: 08-447 Transfer OFF position

11. Sensor test in the [1] [3] test mode.

    1: Confirm whether the attached options are reflected on the bit information correctly.
    2: Refer to 1.2.4 of the Service Handbook.

12. SRAM test/DRAM test/Clock IC test/CODEC test mode.

    For details, see chapter 8 of the Operator’s Manual.

1.11 Measurement of Transfer Guide Bias

The transfer charger bias is applied to the pinch roller and the paper guide plate to prevent the transfer charger charge from escaping through the recording paper during transfer. To analyze the cause of a transfer failure which has occurred, you can output the transfer guide bias in the output test at any time and then measure the voltage.

Important:

Measure the transfer guide bias with the toner cartridge and the process unit taken out from the copier and the front cover open. Also, keep the front cover switch and interlock switch (front cover) ON by using the switch jigs (big/small).

<Keys used in operation>

1 3

Power ON

10.OUTPUT TEST

SET

2 5 0

SET

START

CANCEL

2 5 5

SET

To next page

<Display messages and measurement methods >

```
FUNCTION TEST
09.CODEC TEST
10.OUTPUT TEST
11.PRINTER BOARD TEST
```

: Enter the "Developer Bias Transformer ON/OFF" code.

Important:

Before outputting the transfer guide bias, it is necessary to turn the developer bias ON.

: Developer bias ON

Warning:

High voltage is output from the developer bias terminal. NEVER touch the terminal while measuring.

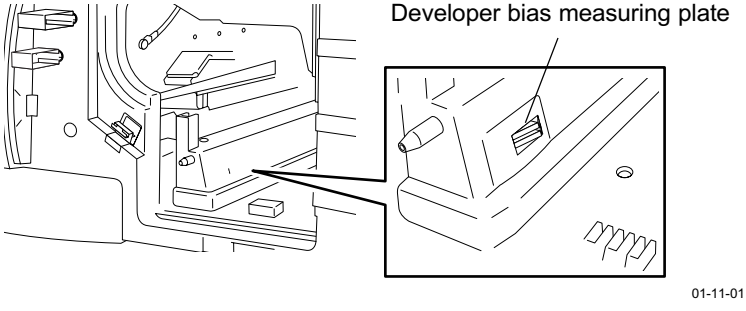

: Enter the "Transfer Guide Bias ON/OFF" code.

From preceding page

START

: Turn the transfer guide bias ON.

Measure the transfer guide bias at the following two points:

Important:

The settings and conditions of the digital tester to be used for measurement are as follows:

Function switch:	DC
Full scale:	1000V
Remark:	The digital tester to be used should have an input resistance value of 10MΩ or more.

Measurement value: +375±20V

To measure on the pinch roller:

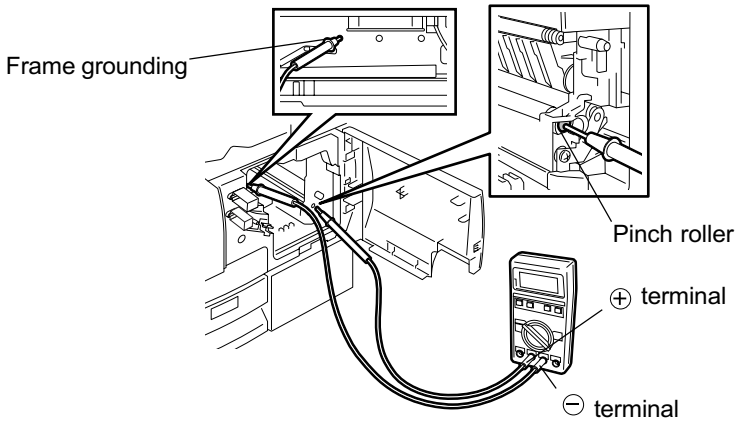

To measure on the paper guide plate:

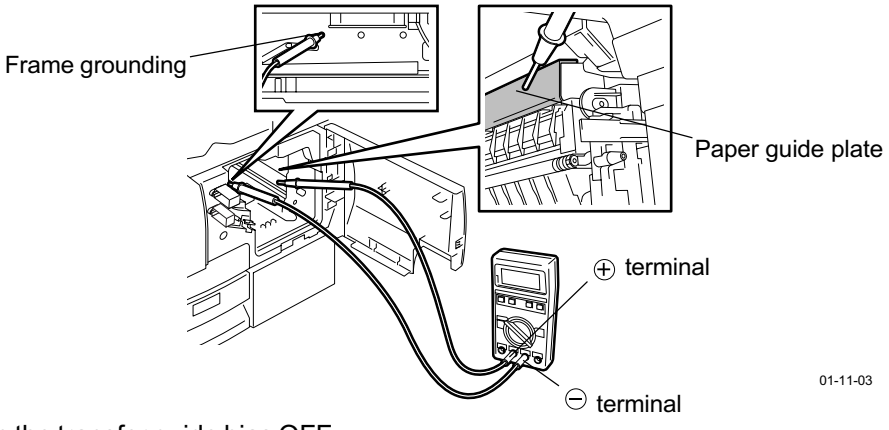

CLEAR/STOP

: Turn the transfer guide bias OFF.

CANCEL

CANCEL

: End the output test.

Power OFF

1.12 Adjustment of the doctor-sleeve gap

Tool to be used: Doctor-sleeve jig

(1) Remove the toner cartridge and process unit.

(2) Detach the drum assembly and dispose the developer material (Chapter 3-4 [G] in the Service Manual).

(3) Remove the 2 screws and detach the developer cover.
Place the drum assembly on a flat surface.

(4) Loosen 3 screws fixing the doctor blade.

(5) Insert the jig of the gauge “0.275” into the gap between the magnetic roller and doctor blade.
The jig should be inserted into the positions of 3 screws.

(6) Tighten the screws while the doctor blade is pressed against the doctor-sleeve jig lightly.

(7) Insert the jig of the gauge “0.25” into the gap between the magnetic roller and doctor blade.
Confirm that the jig moves smoothly to the front and rear sides and the jig of the gauge “0.30” cannot be inserted into the gap.

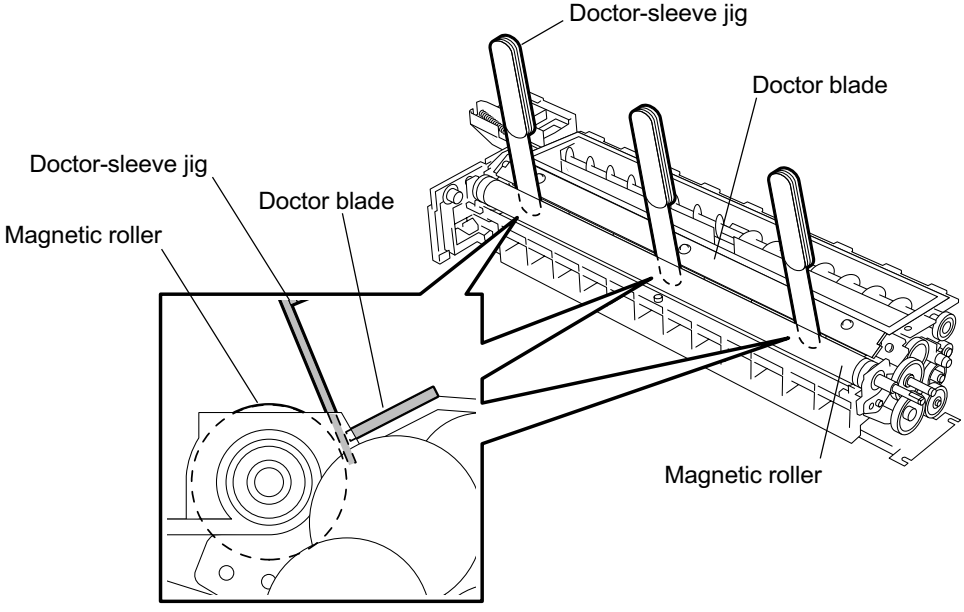

3-4-26

Fig. 1-13-1

(8) Close the developer cover and reconfirm the gap. If the gap is out of the specified value, repeat the procedure from (4).
When closing the developer cover, do not push the magnetic roller guide.

(9) Apply the screw lock paint to 3 screws.

Note: Do not rotate the magnetic roller until the adjustment is completed. If the magnetic roller is rotated during the adjustment, repeat the procedure from (4).

2. PREVENTIVE MAINTENANCE (PM)

2.1 Maintenance Performed Every 81,000 (e-STUDIO160/200 Series) and 99,000 Copies (e-STUDIO250 Series)

(1) Preparation

① Ask user about the current machine condition and note them down.

② Before starting maintenance, make some sample copies and save them.

③ Turn OFF the power, and be sure to unplug the copier.

(2) Perform preventive maintenance using the following checklist and the illustrations. Refer to the Service Manual and Parts List if necessary.

(3) When the maintenance is finished, plug in the copier, turn ON the power, and make a few copies to confirm that the copier is working properly.

2.2 Preventive Maintenance Check List

Symbols used in the check list

Cleaning		Lubrication		Replacing		Operation check	Date
A	Cleaning with alcohol	GR	GR Grease (X5-6020)	27K	Every 27,000 copies	After cleaning or replacing, check for no abnormality	User's name
				33K	Every 33,000 copies		Serial No.
○	Cleaning with soft pad, cloth or vacuum cleaner	W	White grease (Molykote HP-300)	81K	Every 81,000 copies		Inspector's name
				99K	Every 99,000 copies		
		FL	FL Floil (GE-334C)	135K	Every 135,000 copies		Remarks
		SI	Silicon oil	165K	Every 165,000 copies		
		AV	Alvania No. 2	△	Replace if deformed or damaged		

Notes: 1. Perform cleaning and apply lubrication every 81,000 copies for e-STUDIO160/200 series and 99,000 copies for e-STUDIO250 series.

2. <P-I> under "Remarks" indicates page and item number in the Parts List.

3. Replacement cycle of the parts of the feeding section depends on the number of papers fed from each paper source.

4. Values under "Replacement" indicates the replacement cycle for the e-STUDIO160/200 series e-STUDIO250 series.

5. Do not put oil on the rollers and belts when lubricating them.

6. Replace the parts with the life of 27,000 copies (e-STUDIO160/200 series) and 33,000 copies (e-STUDIO250 series) listed in the check list.

7. Replace the heat roller (metallic gold or dark green) and PM kit (FU-KIT-1600N and FU-KIT-2500N) at every 135,000 copies (e-STUDIO160/200 series) and 165,000 copies (e-STUDIO250 series).

MAIN (Front view)

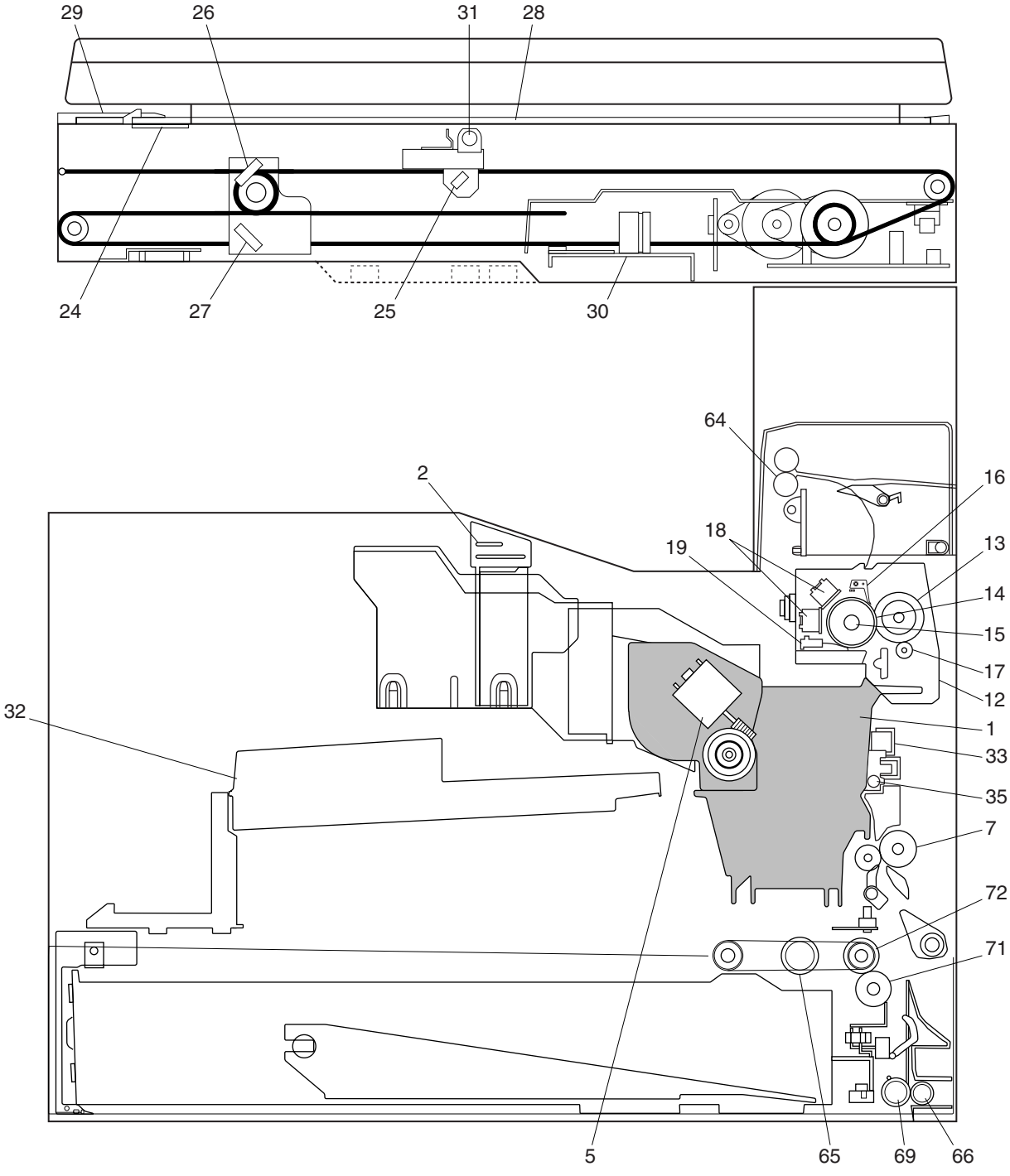

2-1-1

* For an unspecified number, refer to the Parts List.

MAIN (Rear view)

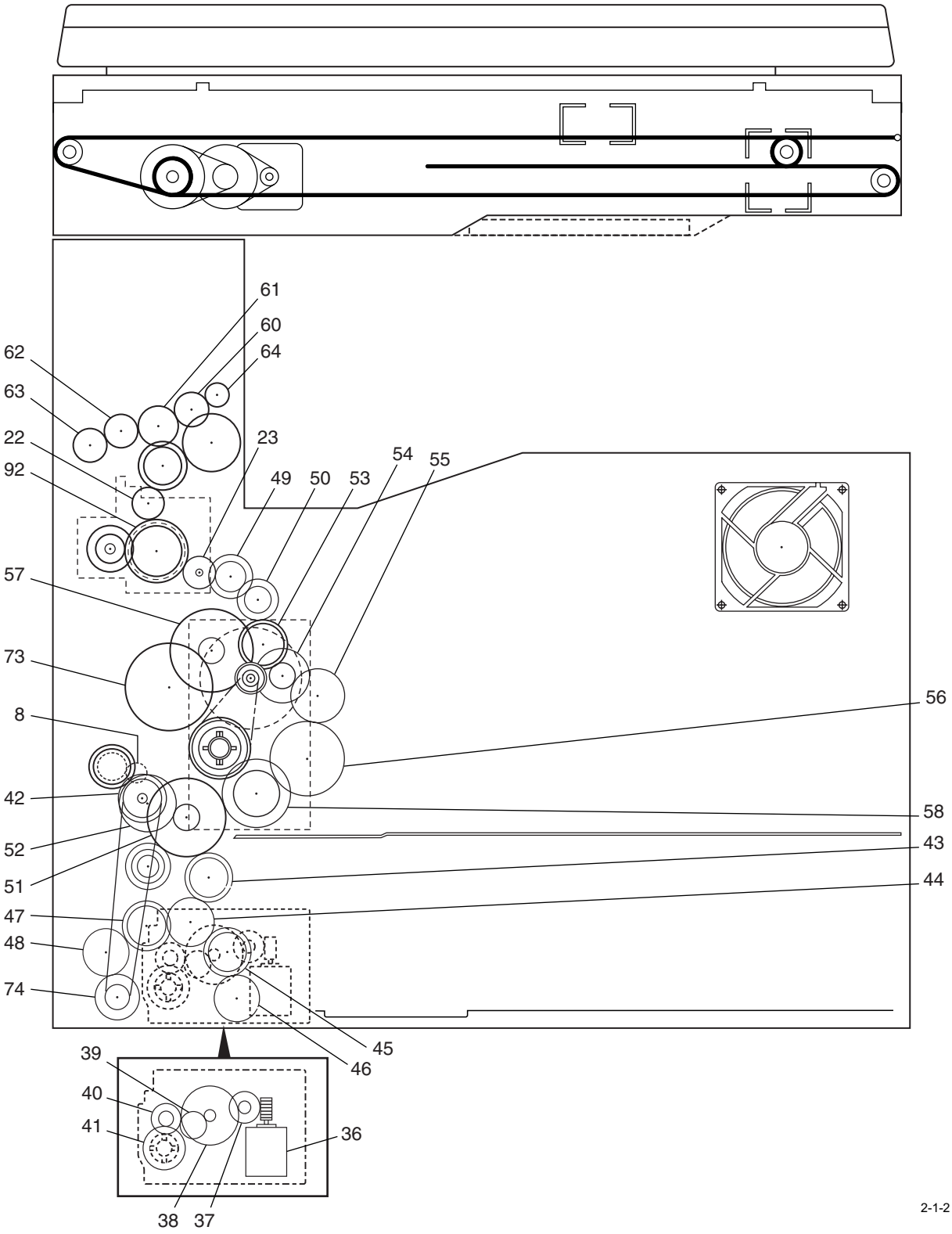

* For an unspecified number, refer to the Parts List.

Section	Item to check	Cleaning	Lubri-cation	Replacement	Operation check	Remarks <P-I>
Process unit	1. Process unit			△		
	Photoconductive drum			27K/33K	*1	
	Drum cleaning blade			27K/33K	*2	
	Recoverly sheet			27K/33K		
	Charger case	○			*3	
	Charger wire			27K/33K	*3	
	Charger wire cleaner			81K/99K		
	Grid			27K/33K		
	Separation claw for drum			27K/33K	*4	
	Sheet cover			27K/33K		
	Sheet cover B			27K/33K		
	Developer material			81K/99K		
	Discharge lamp	○				
	Magnetic roller	*5				
	Magnetic roller spacer				*6	
	Drum gear	*7				
	Cleaner paddle drive gear	*7				
	Toner recovery auger drive gear	*7				
	Doctor blade				*8	
	2. Ozone filter 1			81K/99K		
	Ozone filter 2			81K/99K		<P2-I23>
	Main charger wire	○			*9	
	HVPS contacts	○			*10	
Around-Process unit area	5. Toner supply motor		GR			Gear teeth
	7. Registration roller	○				
	8. Pinch roller gear		GR			Gear teeth <P15-I20> (e-STUDIO200/250 series)
	Ground plate	○	FL		*10	Between the shaft of registration roller and ground plate <P15-I22>
Fuser unit	12. Fuser unit			△		
	13. Pressure roller			81K/99K or 135K/165K	*11	
	14. Heat roller (Brown) Heat roller (Metallic gold) Heat roller (Dark green)			81K/99K 135K/165K 135K/—	*12, *13	
	15. Heater lamp			△		
	16. Separation claw for heat roller			81K/99K or 135K/165K	*14	
	17. Cleaning roller			81K/99K or 135K/165K	*15	
	18. Thermostat 1/2			△		
	19. Heater thermistor 1/2			△		
	Pressure roller cover	○		△	*16	<P27-I3> (e-STUDIO160 series) <P28-I3> (e-STUDIO200/250 series)
	Pressure roller case	○		△	*17	<P27-I4> (e-STUDIO160 series) <P28-I4> (e-STUDIO200/250 series)
	22. HR drive gear 1		W			Shaft
	23. HR drive gear 3		W			Shaft
	23. Inner HR drive gear 3		W			Shaft (e-STUDIO200/250 series)
	92. HR drive gear 2		W		*13	<P27-I9> (e-STUDIO160 series) <P28-I9> (e-STUDIO200/250 series)

Section	Item to check	Cleaning	Lubri-cation	Replacement	Operation check	Remarks <P-I>
Scanner	24. Shading sheet	○		△	*18	
	25. Reflecting mirror 1	○		△	*19	
	26. Reflecting mirror 2	○		△	*19	
	27. Reflecting mirror 3	○		△	*19	
	28. Original glass	○ or A		△	*20	
	29. ADF glass	○ or A		△	*20	
	30. CCD unit	○		△	*21	Using the blower (Do not use a cloth)
	31. Exposure lamp			△		
Laser scanner unit	32. Laser scanner unit	○		△		Using the blower (Do not use a cloth)
Transfer charger unit	33. Transfer charger unit			△		
	Transfer wire	○		81K/99K	*22	<P7-I9>
	35. Transfer guide roller	○			*23	<P7-I16>
Tray-up unit Main drive unit	36. Tray-up Motor		GR			Gear teeth
	37. Tray-up gear 1		GR			Gear teeth
	38. Tray-up gear 2		GR			Gear teeth
	39. Tray-up gear 3		GR			Gear teeth
	40. Tray-up gear 4		GR			Gear teeth
	41. Tray-up gear 5		GR			Gear teeth
Main drive unit	42. Cassette feed gear 2		GR			Gear teeth (Never apply the timing belt)
	43. Cassette feed gear 3		GR			Shaft and gear teeth
	44. Cassette feed gear 4		GR			Shaft and gear teeth
	45. Cassette feed gear 5		GR			Shaft and gear teeth
	46. Cassette feed gear 6		GR			Shaft and gear teeth
	47. Cassette feed gear 7		GR			Shaft and gear teeth
	48. Cassette feed gear 8		GR			Shaft and gear teeth
	49. Transmission gear 1		GR			Shaft and gear teeth
	50. Transmission gear 2		GR			Shaft and gear teeth
	51. Transmission gear 3		GR			Shaft and gear teeth
	52. Registration drive gear		GR			Shaft and gear teeth
	53. Main drive gear 1		GR			Shaft
	54. Main drive gear 2		GR			Shaft and gear teeth
	55. Main drive gear 3		GR			Shaft and gear teeth
	56. Main drive gear 4		GR			Shaft and gear teeth
	57. Main drive gear 5		GR			Shaft and gear teeth
	58. Main drive gear 6		GR			Shaft and gear teeth
	E-ring E-8		GR			<P11-I103>
	73. Drum drive gear		GR			Gear teeth
	74. 2nd feed clutch		GR			Gear teeth
Exit drive	60. Exit drive gear 2		GR			Gear teeth
	61. Exit drive gear 3		GR			Gear teeth
	62. Exit drive gear 4		GR			Gear teeth
	63. Exit drive gear 6		GR			Gear teeth
	64. Exit roller				*24	<P8-I43>
Paper feed unit	65. Pickup roller	○		81K/99K	*25	
	66. 2nd pinch roller	○			*26	
	2nd paper guide	○			*27	<P16-I11>
	Paper guide	○			*27	<P16-I1>
	69. 2nd feed roller	○			*28	
	Spring		AV			<P16-I4>
Paper guide unit	71. Separation roller	○		81K/99K	*29	
	72. Feed roller			81K/99K	*30	Shaft and gear teeth

* Notes on the Preventive Maintenance Checklist

*1. Photoconductive drum

Refer to "3.6 Checking and Cleaning of Photoconductive Drum".

*2. Drum cleaning blade

Since the edge of the blade is breakable and can be easily damaged by matters such as the adherence of paper dust. Replace the cleaning blade with a new one if poor images are copied due to the damaged blade regardless of the number of copies which have been made.

*3. Main charger case/main charger wire

Clean the main charger case and wire with a cloth soaked in water and then squeezed tightly.

Note: Be careful of the following when attaching a new wire (length: 358mm).

- Do not twist the wire.
- Do not touch the wire with your bare hand.

*4. Separation claws for the drum

The paper jam may be caused if the tip of the separation claw is damaged or deformed. If there is any problem with it, replace the claw with a new one regardless of the number of copies which have been made.

If any mark which was made by the claw appears on the copied image, clean the tip of the claw.

Notes: 1. Wipe the tip of the claw lightly with a dry cloth trying not to deform it.
Do not leave the lint on the tip.

2. Apply patting power to the tip of the claws and drum surface after replacing or cleaning them to reduce the load on the drum surface by the claw.

*5. Magnetic roller

If a white banding appears on the magnetic roller, clean the area between the magnetic roller and doctor blade with the doctor blade cleaning jig.

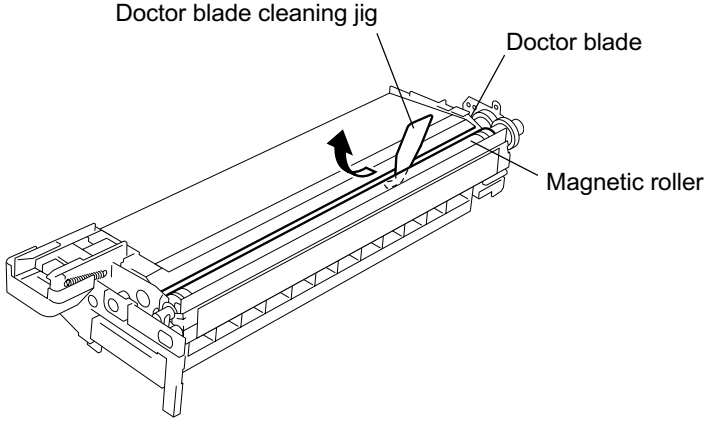

2-6

*6. Magnetic roller spacer

Confirm that the magnetic roller spacer is rotated. If not rotated, replace the magnetic roller spacer with a new one.

*7. Drum gear/Cleaner paddle drive gear/Toner recovery auger drive gear

Confirm that toner or foreign matters is not stuck to the drum gear, cleaner paddle drive gear or toner recover auger drive gear.

If stuck, remove the drum rear cover and clean the gear as required.

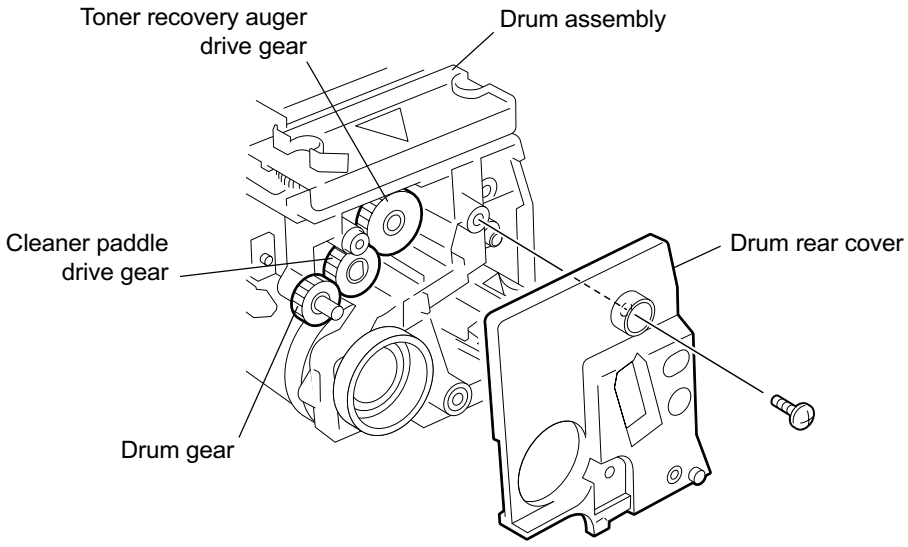

2-7

*8. Doctor blade

Confirm that the doctor-sleeve gap is within the specified value. If not, adjust the gap. (For the specified value and adjustment procedure, refer to section 1.13 “Adjustment of the doctor-sleeve gap” on page 1-95.)

*9. Main charger wire

To clean the wire, use a charger cleaner.

*10. HVPS contacts (Feed roller contact/DEV. Contact/PU contact)/Ground plate

Use a cloth which should be soaked in water and then wrung strongly to clean the contacts surface.

*11. Pressure roller

Refer to “3.2 Checking and Cleaning of the Pressure Roller”.

*12. Heat roller

Refer to “3.4 Checking and Cleaning of the Heat Roller”.

*13. HR drive gear 2

Every time when the HR drive gear 2 or heat roller (metallic gold or dark green) is replaced (135K/165K), wipe the old oil up and apply 0.075g of white grease (molykote HP-300) to the area around the boss inside of HR drive gear 2.

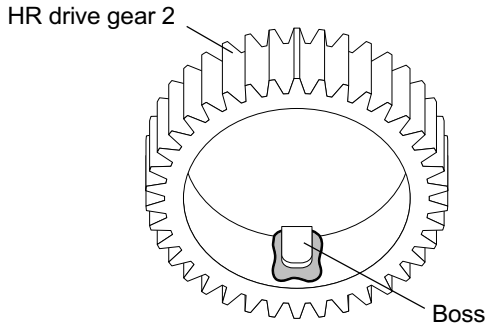

*14. Cleaning roller

Refer to “3.3 Checking and Cleaning of the Cleaning Roller”.

*15. Separation claw

Replace any claws if its tip is damaged, regardless of the specified number of the copies for replacement. If toner is fused tightly on the tip of claws, the tip may be damaged if you try to scrape the toner off forcefully. So, replace any claws that are heavily

*16. Pressure roller cover

To clean the inside of the pressure roller cover, use a cloth which should be soaked in water and then wrung lightly.

*17. Pressure roller case

Check if the outside surfaces including the bottom surfaces are dirty, and clean if necessary.

*18. Shading sheet

To clean the backside of the original glass, use a cloth which should be soaked in water and then wrung strongly.

*19. Reflecting mirror 1/Reflecting mirror 2/Reflecting mirror 3

To clean the surface of the reflecting mirrors, use a cloth which should be soaked in water and then wrung strongly.

*20. Original glass/ADF glass

To clean the surface of the glasses, use a cloth which should be soaked in water and then wrung strongly.

*21. CCD unit

To clean the lens of the CCD, use a blower.

*22. Transfer wire

To clean the wire, use a charger cleaner.

*23. Transfer guide roller

Refer to “3.5 Checking and Replacing the Transfer Guide Roller”.

*24. Exit roller

To clean the surface of the exit roller, use a cloth which should be soaked in water and then wrung strongly.

*25. Pickup roller

To clean the surface of the pickup roller, use a cloth which should be soaked in water and then wrung strongly.

*26. 2nd pinch roller

To clean the surface of the 2nd pinch roller, use a cloth which should be soaked in water and then wrung strongly.

*27. Paper guide/2nd paper guide

To clean the surface of the paper guides, use a cloth which should be soaked in water and then wrung strongly.

*28. 2nd feed roller

To clean the surface of the 2nd feed roller, use a cloth which should be soaked in water and then wrung strongly.

*29. Separation roller

To clean the surface of the separation roller, use a cloth which should be soaked in water and then wrung strongly.

*30. Feed roller

To clean the surface of the feed roller, use a cloth which should be soaked in water and then wrung strongly.

MY-1015

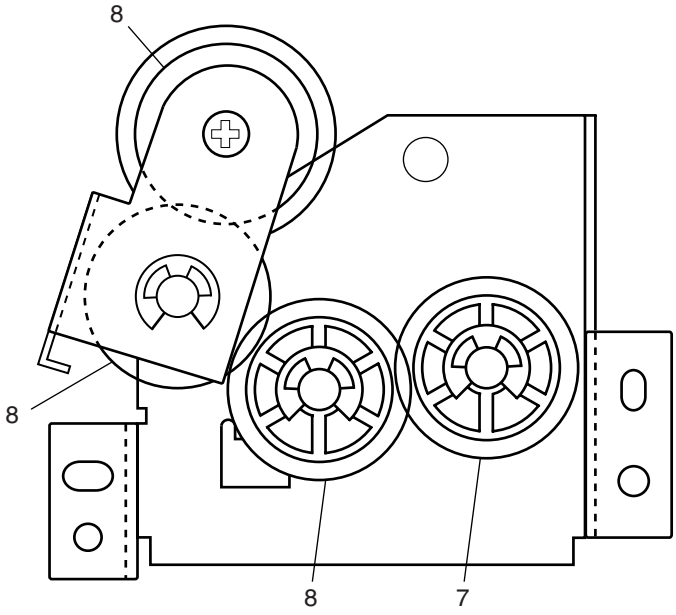

2-1

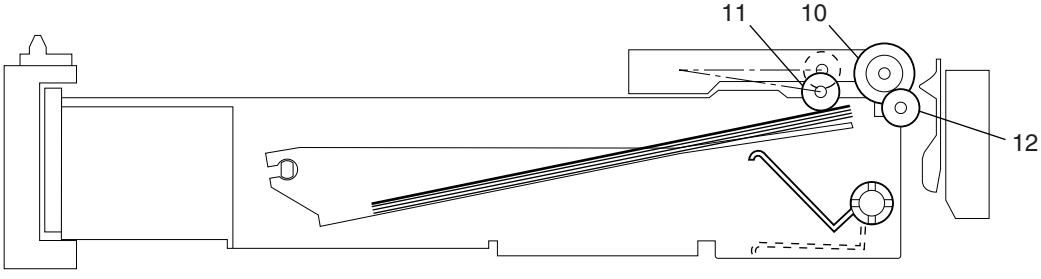

2-3

Section	Item to check	Cleaning	Lubri-cation	Replace-ment	Operation check	Remarks <P-I>
Tray-up unit	1. Tray-up Motor		GR			Gear teeth, see page 2-3/2-5
	2. Tray-up gear 1		GR			Gear teeth, see page 2-3/2-5
	3. Tray-up gear 2		GR			Gear teeth, see page 2-3/2-5
	4. Tray-up gear 3		GR			Gear teeth, see page 2-3/2-5
	5. Tray-up gear 4		GR			Gear teeth, see page 2-3/2-5
	6. Tray-up gear 5		GR			Gear teeth, see page 2-3/2-5
Gears	7. PFU joint gear 06B		GR			Shaft and gear teeth
	8. PFU joint gear 06A		GR			Shaft and gear teeth
Rollers	10. Feed roller			△		<P3-I16>
	11. Pickup roller			△		<P3-I29>
	12. Separation roller			△		<P3-I20>
Other	13. Spring		AV			<P3-I19>

MD-0101

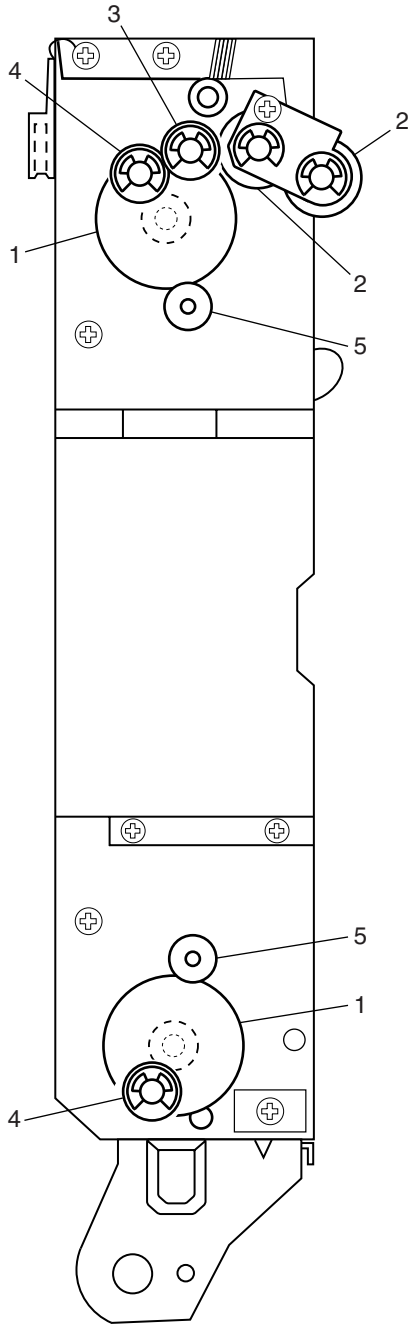

2-2

Section	Item to check	Cleaning	Lubri-cation	Replace-ment	Operation check	Remarks
Motor gears	1. Gear GG0SSW4/USS044		GR			Shaft and gear teeth
	2. Gear 08S024-06		GR			Shaft and gear teeth
	3. Gear 08S018-06		GR			Shaft and gear teeth
	4. Gear 08S18-06CL		GR			Gear teeth
	5. ADU motor		GR			Gear teeth

MY-1016

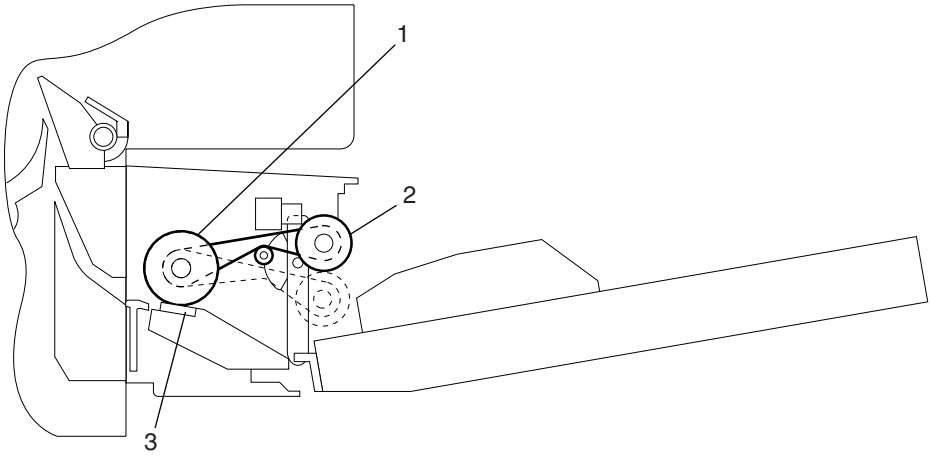

2-4

Section	Item to check	Cleaning	Lubri-cation	Replace-ment	Operation check	Remarks <P-I>
Rollers	1. Feed roller			△		
	2. Pickup roller			△		
	3. Separation pad			△		
Other	4. Spring		SI			<P2-I28>
	5. Document tray upper		SI			<P1-I5>

MR-3011

Section	Item to check	Cleaning	Lubri-cation	Replace-ment	Operation check	Remarks
Clutch gears	1. RADF clutch gear 56/16		GR			Gear teeth
	2. RADF clutch gear 40/24		GR			Gear teeth
	3. RADF clutch gear 20		GR			Gear teeth
	4. RADF clutch gear 66		GR			Gear teeth
	5. RADF clutch gear 25		GR			Gear teeth
Rollers	6. Feed roller			△		
	7. Pickup roller			△		
	8. Separation pad			△		
	9. Separation roller			△		

MJ-5002

Section	Item to check	Cleaning	Lubri-cation	Replace-ment	Operation check	Remarks <P-I>
Roller	1. OCT exit roller		GR FL			Shaft <P2-I19>
Frame	2. OCT gear frame		GR			Shaft <P1-I17>

MJ-5001

Section	Item to check	Cleaning	Lubri-cation	Replace-ment	Operation check	Remarks <P-I>
Gears	1. Gear 08S012-05H		GR			Shaft <P1-I66>
	2. JSP gear pulley		GR			Shaft <P1-I61>
Other	3. JSP flapper		GR			Shaft <P1-I54>
	4. JSP exit roller shaft		GR			Shaft <P1-I42>

KD-1009

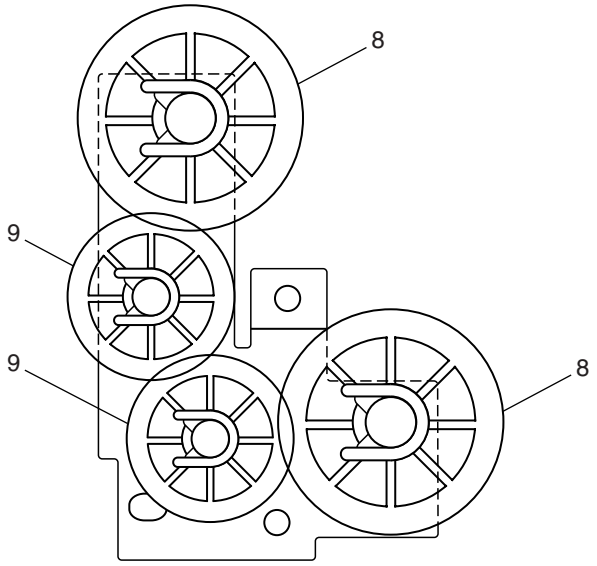

2-5

Section	Item to check	Cleaning	Lubri-cation	Replace-ment	Operation check	Remarks
Gears	1. Gear GG10S018/05H073		GR			Shaft and gear teeth
	2. Gear GG10S018/05H048		GR			Shaft and gear teeth
	3. Gear GP10S018/3GT031		GR			Shaft and gear teeth
	4. Gear 10S031-06		GR			Shaft and gear teeth
	5. Gear 10S016-06		GR			Shaft and gear teeth
	6. Gear GP10S016/2GT027		GR			Shaft and gear teeth
	7. Gear GP10S028/3GT031		GR			Shaft and gear teeth
	8. Gear 10S028-06		GR			Shaft and gear teeth
	9. Gear 10S020-06		GR			Shaft and gear teeth
	10. Gear 10S16-06		GR			Gear teeth
	11. Gear 22-clutch		GR			Gear teeth
Other (MY-1017)	12. Feed roller			△		
	13. Bush (POM)		GR			
	14. Tension pulley		GR			Shaft
	15. Pickup roller			△		
	16. Separation roller			△		

MR-2012

Section	Item to check	Cleaning	Lubri-cation	Replace-ment	Operation check	Remarks
Rollers	1. Feed roller			△		
	2. Pickup roller			△		
	3. Separation pad			△		
	4. Separation roller			△		

KD-1010

Section	Item to check	Cleaning	Lubri-cation	Replace-ment	Operation check	Remarks
Rollers	1. Feed roller (Upper/Lower)	A		△		
	2. Pickup roller (Upper/Lower)	A		△		
	3. Separation roller (Upper/Lower)	A		△		
Gears	4. Drive gears		W			Gear teeth

2.3 PM Kit

Kit name	Classification of kits	PART NAME	Q'ty	No. of copies for replacement cycle	
				e-STUDIO160/ 200 series	e-STUDIO250 series
CH-KIT-1600	Transfer wire	WIRE-TC	2	81K	99K
	Guide roller gear	GEAR-RLR-GUIDE	1		
	Defense sheet R	SHEET-DEFENSE-R	1		
	Defense sheet F	SHEET-DEFENSE-F	1		
	Guide roller	ROLLER-GUIDE	1		
	Guide roller bush	BUSH-RLR-GUIDE	2		
ROL-KIT-16CST	Separation roller	K-ROLL-SPT	1	81K	99K
	Feed roller	K-ROLL-FEED	1		
	Pickup roller	ROLLER-PICK-AT	1		
PU-KIT-1600	Drum cleaning blade	BL-1600D	1	27K	33K
	Recovery sheet	SHEET-RECOV	1		
	Sheet cover	SHEET-COVER	1		
	Sheet cover	CHEET-COVER-B	1		
	Drum scraper	SCRAPER-DRUM-S	3		
	Charger	WIRE-CHG-S	1		
	Grid	K-GRID-13	1		
DEV-KIT-1610	Developer	D-1600	1	81K	99K
	Cleaning pad	K-HLDR-PAD	2		
	Ozone filter 1	FILTER-OZON-TY1	1		
	Ozone filter 2	FILTER-OZON-TY2	1		
FU-KIT-1600N	Cleaning roller	RLR-FUS-CLN	1	135K (e-STUDIO160 series)	-
	Cleaning roller bush	BUSH-CL-RLR	2		
	Heat roller bush	BUSH-HR/RLR	2		
	Idle gear	GEAR-HT/IDLE	1		
	Separation finger	SEP-HT/RLR	6		
	Pressure roller	HR-1600-L	1		
	Heat roller (Metallic gold)	HR-1600-UN	1		
FU-KIT-2500N	Cleaning roller	RLR-FUS-CLN	1	135K (e-STUDIO200 series)	165K
	Cleaning roller bush	BUSH-CL-RLR	2		
	Heat roller bush	BUSH-HR/RLR	2		
	Idle gear	GER1-HT/IDLE-AW	1		
		GER2-HT/IDLE-AW	1		
	Separation finger	SEP-HT/RLR	6		
	Pressure roller	HR-2500-L	1		
	Heat roller (Metallic gold)	HR-2500-UN	1		
ROL-KIT-1010	Pickup roller	ROL-PICK-UP	1	160K (e-STUDIO200 series)	160K
	Feed roller	ROL-PAPER-FED-F	1		
	Separation roller	ROL-PAPER-FED-S	1		

2.4 List of Adjustment Tools

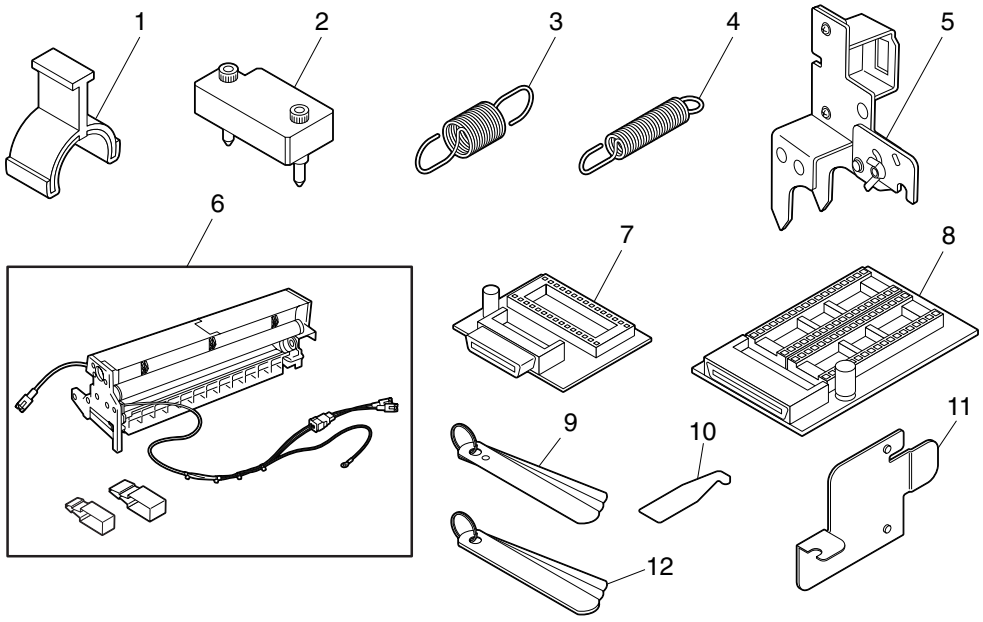

No.	Classification of tools	Name	Parts List	
			Page	Item
1	Clip jig	ASM-HLD-W-AT	20	1
2	CCD jig	JIG-CCDUNIT-AT	20	2
3	Spring jig (wire)	SPE-TENS-WIRE	20	3
4	Spring jig (belt)	SPE-TENS-BELT	20	4
5	Drive gear jig	ASM-GBOX-JIG	20	5
6	High-voltage measurement jig	ASM-P/U-TOOL	20	6
7	Scanner recovery PWA	PWA-F-SCNRCV-AT	20	7
8	Main recovery PWA	PWA-F-RCV-AT	20	8
9	Doctor-sleeve jig	K-JIG-DC-SL	20	16
10	Doctor-blade cleaning jig	MYLER-SCRAPER	20	17
11	Belt tension jig	PLT-JIG-ADJ-MOT	20	21
12	Fuser gap jig	ASY-JIG-FGAP	20	22

2.5 List of Grease

Lubrication	Name	Volume	Container	Parts List	
				Page	Item
GR Grease (X5-6020)	MOLYKOTE-100	100g	Tube	20	11
SI Silicon oil (TSF451-1M)	ASM-SILICONE-1M	100cc	Bottle	20	12
AV Alvania grease No.2	ASM-PG-ALV2-S	100g	Tube	20	13
W White grease (Molykote HP-300)	ASM-PG-HP300-S	100g	Bottle	20	14A
W White grease (Molykote HP-300)	GREASE-HP300-S	10g	Bottle	20	14B
FL Floil (GE-334C)	ASM-GE334C-S	20g	Bottle	20	15

3. PRECAUTIONS FOR STORING & HANDLING SUPPLIES

3.1 Precautions for Storing TOSHIBA Supplies

A. Toner cartridge

Toner cartridge and process unit should be stored in a shaded place where the ambient temperature is between 10 to 35°C (no condensation), and should also be protected against direct sunlight during transportation.

B. Process unit (Developer material, Photoconductive drum, Drum cleaning blade)

Like toner cartridge, process unit should be stored in a dark place where the ambient temperature is between 10 to 35°C (no condensation). Be sure to avoid places where process unit may be subjected to high humidity, chemicals and/or chemical gas.

C. Pressure roller

Avoid places where the pressure roller may be subjected to high humidity, chemicals and/or chemical gas.

D. Cleaning roller

Avoid places where the cleaning roller may be subjected to high humidity, chemicals and/or chemical gas. It should also be stored “horizontally” on a flat surface.

E. Heat roller

Avoid places where the heat roller may be subjected to high humidity, chemicals and/or chemical gas.

F. Copy paper

Avoid storing copy paper in places where it may be subjected to high humidity.
After a package is opened, be sure to place and store it in a storage bag.

3.2 Checking and Cleaning of the Pressure Roller

(1) Handling precautions

① Do not allow any hard object to hit or rub against the surface.

② Do not stain the pressure roller surface with any oil of fingerprints, etc.

③ Do not allow solvents such as paint thinner to touch the pressure roller surface.

(2) Cleaning procedure

Use a cloth which should be soaked in water and then wrung strongly to clean the pressure roller surface.

3.3 Checking and Cleaning of the Cleaning Roller

(1) Handling precautions

④ Do not allow any hard object to hit or rub against the surface.

⑤ Do not stain the pressure roller surface with any oil of fingerprints, etc.

⑥ Do not allow solvents such as paint thinner to touch the pressure roller surface.

(2) Checking

Defective heat roller cleaning should be judged by the toner deposited on the pressure roller surface

It toner is heavily adhered on the heat roller surface, defective cleaning any occur. If this happens, replace the cleaning roller.

Replace it preferably after about 81K copies for e-STUDIO160 series and 99K copies for e-STUDIO200/250 series have been made.

(3) Cleaning procedure

Use a cloth which should be soaked in water and then wrung strongly to clean the cleaning roller surface.

3.4 Checking and Cleaning of the Heat Roller

(1) Handling Precautions

① Do not leave any oil (fingerprints, etc.) on the heat roller.

② Be careful not to allow any hard object to hit or rub against the heat roller, or they may be damaged, possibly resulting in defective cleaning.

(2) Checking

① Check for stain and damage on the heat roller and clean if necessary.

② Clean the separation claws and check for chipped claw tips.

③ Check the cleaning effect of the cleaning roller.

④ Check the thermistor for proper contact with the heat roller.

⑥ Check the fused condition of the toner image.

(3) Cleaning Procedure for Heat Roller

When heat roller become dirty, they will cause jamming. If this happens, wipe the heat roller surface clean with a suitable cloth. For easier cleaning, clean the heat roller while they are still warm.

Note: Be careful not to rub the heat roller surface with your fingernails or hard objects because it can be easily damaged. Do not use silicone oil on the heat roller.

3.5 Checking and Replacing of the Transfer Guide Roller

(1) Handling Precautions

① Do not touch the transfer guide roller surface with your bare hands.

② Be careful not to leave any scratch or dent on the transfer guide roller surface.

3.6 Checking and Cleaning of the Photoconductive Drum

(1) Use of gloves

Since fingerprints or oil stains on the drum surface affects the quality of the copy image and degrades the characteristics of the photoconductor, do not touch the drum surface with your bare hands.

(2) Handling precautions

As the drum surface is very sensitive, be sure to handle the drum carefully when installing or removing it so as not to damage its surface.

When the drum is replaced with a new one, apply patting powder (lubricant) on the entire surface of the new drum (including both edges to where the OPC is not coated) and separation claw of the cleaner before installing them. The drum counter must be cleared to 0 (zero) in the setting mode 08-673.

Notes: 1. Application of the patting powder is to reduce friction among the drum, the cleaning blade and the separation claw. If this process is not performed, the drum and the cleaning blade may be damaged.

2. Remove any fibers or lint adhering to the blade since they can damage the drum and blade, or allows defective cleaning.

(3) Installation of the copier and storage of the drum

Do not install the copier in a place where it may be exposed to high temperature, high humidity, chemicals and/or chemical gas.

Do not leave the drum in a brightly lit place for a long time. Otherwise, it would be fatigued and causes background fogging on the copied image right after it is installed in the machine. However, this phenomenon will decrease as time elapses.

(4) Cleaning the drum

At the preventive maintenance, wipe the entire surface of the drum softly using the specified cleaning cotton (dry soft pad). Use sufficiently thick cleaning cotton so as not to touch the drum surface directly with your fingertips or nails. Remove your rings and wristwatch before cleaning so as not to damage the drum.

Do not use organic solvents such as alcohol or silicone oil as they have a bad influence on the drum. Do not use selenium refresher either.

(5) Scratches on the photoconductive drum surface

If the surface is scratched and the aluminum base is exposed, black spots or streaks will appear on the copied images. Since those scratches can damage the cleaning blade, replace the drum with a new one.

(6) Used photoconductive drums

Dispose of the used drums following the regulations regarding industrial waste established by your local municipal office.

3.7 Checking and Cleaning of the Drum Cleaning Blade

(1) Handling Precautions

Since the edge of the cleaning blade performs the cleaning operation, pay attention to the followings:

- Do not hit or rub the blade edge with anything hard.
- Do not rub the edge with a dry cloth or soft pad.
- Do not stain the edge with oil or fingerprints, etc.
- Do not put solvents such as paint thinner or the blade.
- Do not leave lint or dirt on the blade edge.
- Do not put the blade close to a heat source.

(2) Cleaning

Clean the blade edge softly with a cloth soaked in water and afterwards squeezed hard.

4. TROUBLESHOOTING

Before starting any repair work, strictly obey the following instructions.

⚠ **CAUTION:**

- When replacing parts, be sure to turn the main switch OFF and unplug the power-cord plug from the outlet.

Notes:

- Be sure to output a dial list and a system function list and keep them until the troubleshooting is completed so that if the user's set data is lost it can be re-entered.
- Before turning the main switch OFF, be sure to confirm that the residual memory is 100% and no memory reception documents exist. If there is such a document , it will be lost if the service activity requires the battery backup to be unplugged.
- Cover the process unit with a cloth, etc., whenever it is removed from the machine to protect the photosensitive material from deterioration by exposure to light.
- Be sure to perform each adjustment and setting when replacing the following part.

Main PWA	:	Refer to 1.10 MAIN PWA replacement procedure.
CCD unit	:	Refer to 1.4.3 Printer unit adjustment and 1.8.5 CCD unit.
Scanner control PWA	:	Refer to 1.4.3 Scanner unit adjustment.
Carriage 1	:	Refer to 1.8.3 Adjusting the Carriage 1.
Carriage 2	:	Refer to 1.8.4 Adjusting the Carriage 2.
Laser scanner unit	:	Refer to 1.4.2 Printer unit adjustment and 1.4.4 Printer.
Original length sensor (RADF)	:	Automatic sensor adjustment (05-356)
Read sensor (RADF)	:	Automatic sensor adjustment (05-356)
Reverse sensor (RADF)	:	Automatic sensor adjustment (05-356)

4.1 Troubleshooting Based on Error Code

4.1.1 Transporting jam in the main body

E01 **Paper jam inside the machine**

E02 **Paper jam near the fuser unit**

When recording paper is left inside the machine, remove it. If this error occurs frequently, the following items should be checked.

Where was the paper stopped?

- Before reaching the registration roller

  Is the registration roller clutch working? (using the test mode 10, Output Test, CODE 108)

  YES → Check to see if there are any foreign obstacles on the recording paper path near the registration roller.

  NO ↓

  1. Check if each connector between the registration roller clutch and relay PWA (CN37) is disconnected.
  2. Check if each connector pin is removed or the harness is broken.
  3. Check if any conductor pattern on the relay and main PWA is open- or short-circuited.
  4. Replace the registration roller clutch.
  5. Replace the relay PWA.
  6. Replace the main PWA.

- Near the fuser unit

  Is the HR drive gear 1 of the fuser unit driven when the main motor is manually rotated clockwise?

  YES → Check to see if there are any foreign obstacles on the recording paper path near the fuser unit.

  NO ↓

  1. Check to see if the gear in the fuser unit is damaged.
  2. Check to see if each gear of the main drive gear assembly is damaged.

Near the exit unit (ADU is not installed)

Is the exit roller of the exit unit driven when the main motor is manually rotated clockwise?

YES → Check to see if there are any foreign obstacles on the paper path in the exit unit.

NO →

1. Check to see if the gear in the exit unit is damaged.
2. Check to see if each gear of the main drive gear assembly is damaged.

Near the exit unit (ADU is installed)

Do the gears of the drive gear assembly rotate when the ADU motor (Upper) is driven in the forward direction? (using test mode 10, Output Test, CODE 223)

NO →

1. Check if the gears of the drive gear assembly are damaged.
2. Check if the connector of the ADU motor (upper) is disconnected.
3. Check if each connector between the ADU PWA and the PFC PWA is disconnected.
4. Check if each connector between the PFC PWA and the relay PWA is disconnected.
5. Check if each connector pin is removed or the harness is broken.
6. Check if any conductor pattern on the ADU, PFC, relay and main PWA is open- or short-circuited.
7. Replace the ADU motor (Upper).
8. Replace the ADU PWA.
9. Replace the PFC PWA.
10. Replace the relay PWA.
11. Replace the main PWA.

YES

Is the exit sensor working? (using the test mode 04, Sensor Test, DATA No. 6 Bit 3)

NO

1. Check if each connector between the exit sensor and relay PWA (CN45) is disconnected.
2. Check if each connector pin is removed or the harness is broken.
3. Check if any conductor pattern on the relay and main PWA is open- or short-circuited.
4. Replace the exit sensor.
5. Replace the relay PWA.
6. Replace the main PWA.

YES

Check to see if there are any foreign obstacles on the recording paper path.

Near the JSP

Is the JSP paper jam sensor working? (using the test mode 04, Sensor Test, DATA No. 9 Bit 4)

NO

1. Check if each connector between the JSP paper jam sensor and the JSP PWA (CN262) is disconnected.
2. Check if each connector between the JSP PWA (CN260) and the relay PWA (CN41) is disconnected.
3. Check if each connector pin is removed or the harness is broken.
4. Check if any conductor pattern on the JSP, relay and main PWA is open- or short-circuited.
5. Replace the JSP paper jam sensor.
6. Replace the JSP PWA.
7. Replace the relay PWA.
8. Replace the main PWA.

YES

Check to see if there are any foreign obstacles on the recording paper path.

Near the OCT

Is the OCT paper feed sensor working? (using the test mode 04, Sensor Test, DATA No. 9 Bit 4)

NO

1. Check if each connector between the OCT paper feed sensor and the OCT PWA (CN262) is disconnected.
2. Check if each connector between the JSP PWA (CN260) and the relay PWA (CN41) is disconnected.
3. Check if each connector pin is removed or the harness is broken.
4. Check if any conductor pattern on the OCT, relay and main PWA is open- or short-circuited.
5. Replace the OCT paper feed sensor.
6. Replace the OCT PWA.
7. Replace the Relay PWA.
8. Replace the main PWA.

YES

Check to see if there are any foreign obstacles on the recording paper path.

E03 **Paper remaining inside the machine at power ON**

When recording paper is left inside the machine, remove it. If this error occurs frequently, refer to E01, E02 and E11 to E19.

E08 **Transporting jam inside the ADU**

If recording paper is left in the ADU, remove it. If this error occurs frequently, the following items should be checked.

Do the gears of the drive gear assembly rotate when the ADU motor (Upper) is driven in the reverse direction? (using test mode 10, Output Test, CODE 224)

NO

1. Replace the ADU PWA.
2. Replace the PFC PWA.
3. Replace the relay PWA.
4. Replace the main PWA.

YES

Is the ADU paper jam sensor (Upper) working? (using the test mode 04, Sensor Test, DATA No. 19 Bit 2)

NO

1. Check if each connector between the ADU paper jam sensor (upper) and the ADU PWA (CN214) is disconnected.
2. Check if each connector between the ADU PWA (CN211) and the PFC PWA (CN203) is disconnected.
3. Check if each connector between the PFC PWA (CN201) and the relay PWA (CN36) is disconnected.
4. Check if each connector pin is removed or the harness is broken.
5. Check if any conductor pattern on the ADU, PFC, relay and main PWA is open- or short-circuited.
6. Replace the ADU paper jam sensor (Upper).
7. Replace the ADU PWA.
8. Replace the PFC PWA.
9. Replace the relay PWA.
10. Replace the main PWA.

YES

Is the ADU paper jam sensor (Lower) working? (using the test mode 04, Sensor Test, DATA No. 19 Bit 1)

NO

1. Check if each connector between the ADU paper jam sensor (lower) and the ADU PWA (CN213) is disconnected.
2. Check if each connector between the ADU PWA (CN211) and the PFC PWA (CN203) is disconnected.
3. Check if each connector between the PFC PWA (CN201) and the relay PWA (CN36) is disconnected.
4. Check if each connector pin is removed or the harness is broken.
5. Check if any conductor pattern on the ADU, PFC, relay and main PWA is open- or short-circuited.
6. Replace the ADU paper jam sensor (Lower).
7. Replace the ADU PWA.
8. Replace the PFC PWA.
9. Replace the relay PWA.
10. Replace the main PWA.

YES

Check to see if there are any foreign obstacles on the paper path in the ADU.

4.1.2 Paper feeding jam

E11 **Paper feeding jam at the ADU**

If recording paper is left in the ADU, remove it. If this error occurs frequently, the following items should be checked.

1. Check to see if the pinch roller or feed roller in the ADU is damaged.
2. Check to see if there are any foreign obstacles on the recording paper path in the ADU.

E12 **Paper feeding jam at the SFB**

When recording paper is left inside the SFB, remove it. If this error occurs frequently, the following items should be checked.

Is the SFB feed sensor working? (using the test mode 04, Sensor Test, DATA No. 11 bit 0)

NO →
1. Check if each connector between the SFB feed sensor and the relay PWA (CN43) is disconnected.
2. Check if each connector pin is removed or the harness is broken.
3. Check if any conductor pattern on the relay and main PWA is open- or short-circuited.
4. Replace the SFB feed sensor.
5. Replace the relay PWA.
6. Replace the main PWA.

YES ↓

Is the SFB clutch working? (using the test mode 10, Output Test, CODE 204)

NO →
1. Check if each connector between the SFB clutch and the relay PWA (CN43) is disconnected.
2. Check if each connector pin is removed or the harness is broken.
3. Check if any conductor pattern on the relay and main PWA is open- or short-circuited.
4. Replace the SFB clutch.
5. Replace the relay PWA.
6. Replace the main PWA.

YES ↓

1. Check to see if the gears and belt which convey the power of the main motor to the SFB pickup roller, are damaged.
2. Check to see if there are any foreign obstacles in the paper transport path from the SFB feed section up to the registration roller.

E13 **Tray 1 feeding jam**

When recording paper is left on the recording paper path, remove it. If this error occurs frequently, the following items should be checked.

Where was the paper stopped?

- Near the registration roller

  Is the feed sensor working? (using the test mode 04, Sensor Test, DATA No. 6 Bit 2)

  NO →
  1. Check if each connector between the feed sensor and the relay PWA (CN33) is disconnected.
  2. Check if each connector pin is removed or the harness is broken.
  3. Check if any conductor pattern on the relay and main PWA is open- or short-circuited.
  4. Replace the feed sensor.
  5. Replace the Relay PWA.
  6. Replace the main PWA.

  YES ↓

  Check to see if there are any foreign obstacles on the recording paper path.

- Before reaching the pickup feed roller

  Is the pickup clutch working? (using the test mode 10, Output Test, CODE 201)

  NO →
  1. Check if each connector between the pickup clutch and the relay PWA (CN37) is disconnected.
  2. Check if each connector pin is removed or the harness is broken.
  3. Check if any conductor pattern on the relay and main PWA is open- or short-circuited.
  4. Replace the pickup clutch.
  5. Replace the relay PWA.
  6. Replace the main PWA.

  YES ↓

  Activate the pickup clutch. (using test mode 10, Output Test, CODE 201)
  Do the pickup and pickup feed rollers rotate when the main motor is driven? (using test mode 10, Output Test, CODE 101)

  NO →
  1. Check to see if each gear of the main drive gear assembly is damaged.
  2. Check to see if each pulley or the timing belt of the pickup assembly is damaged.

  YES ↓

  Check to see if there are any foreign obstacles on the recording paper path.

E14 **Tray 2 feeding jam**

When recording paper is left on the recording paper path, remove it. If this error occurs frequently, the following items should be checked.

Where was the paper stopped?

- Near the registration roller

  Is the 2nd feed roller sensor working? (using the test mode 04, Sensor Test, DATA No. 20 Bit 6)

  NO →
  1. Check if each connector between the 2nd feed roller sensor and the PFC PWA (CN205) is disconnected.
  2. Check if each connector between the PFC PWA (CN201) and the relay PWA (CN36) is disconnected.
  3. Check if each connector pin is removed or the harness is broken.
  4. Check if any conductor pattern on the PFC, relay and main PWA is open- or short-circuited.
  5. Replace the 2nd feed roller sensor.
  6. Replace the PFC PWA.
  7. Replace the relay PWA.
  8. Replace the main PWA.

  YES →

  Check to see if there are any foreign obstacles on the recording paper path.

- Before reaching the 2nd feed roller

  Is the 2nd feed roller clutch working? (using the test mode 10, Output Test, CODE 203)

NO

1. Check if each connector between the 2nd feed roller clutch and the PFC PWA (CN205) is disconnected.
2. Check if each connector between the PFC PWA (CN201) and the relay PWA (CN36) is disconnected.
3. Check if each connector pin is removed or the harness is broken.
4. Check if any conductor pattern on the PFC, relay and main PWA is open- or short-circuited.
5. Replace the 2nd feed roller clutch.
6. Replace the PFC PWA.
7. Replace the Relay PWA.
8. Replace the main PWA.

YES

Is the PFU pickup clutch working? (using the test mode 10, Output Test, CODE 202)

NO

1. Check if each connector between the PFU pickup clutch and the PFC PWA (CN208) is disconnected.
2. Check if each connector between the PFC PWA (CN201) and the relay PWA (CN36) is disconnected.
3. Check if each connector pin is removed or the harness is broken.
4. Check if any conductor pattern on the PFC, relay and main PWA is open- or short-circuited.
5. Replace the PFU pickup clutch.
6. Replace the PFC PWA.
7. Replace the relay PWA.
8. Replace the main PWA.

YES

Activate the PFU pickup clutch. (using test mode 10, Output Test, CODE 202)
Do the pickup and pickup feed rollers of the PFU rotate when the main motor is driven? (using test mode 10, Output Test, CODE 101)

NO

1. Check to see if each gear of the main drive gear assembly is damaged.
2. Check to see if each pulley or the timing belt of the PFU pickup assembly is damaged.

YES

Check to see if there are any foreign obstacles on the recording paper path.

E15 **Tray 3 feeding jam**

E19 **LCF feeding jam**

When recording paper is left on the recording path, remove it. If this error occurs frequently, the following items should be checked.

Is the PFP paper feed sensor (Upper) working? (using the test mode 04, Sensor Test, DATA No.17 Bit 4)

NO →

1. Check if each connector between the PFP paper feed sensor (Upper) and the PFP PWA (CN243) is disconnected.
2. Check if each connector between the PFP PWA (CN241) and the PFC PWA (CN206) is disconnected.
3. Check if each connector between the PFC PWA (CN201) and the relay PWA (CN36) is disconnected.
4. Check if each connector pin is removed or the harness is broken.
5. Check if any conductor pattern on the PFP, PFC, relay and main PWA is open- or short-circuited.
6. Replace the PFP paper feed sensor (Upper).
7. Replace the PFP PWA.
8. Replace the PFC PWA.
9. Replace the relay PWA.
10. Replace the main PWA.

YES ↓

Activate the PFP pickup clutch. (using test mode 10, Output Test, CODE 226)

Do the pickup and pickup feed rollers installed on the upper side of the PFP rotate when the PFP main motor is driven? (using test mode 10, Output Test, CODE 109)

NO →

1. Check to see if the gears and belt which convey the power of the PFP main motor to the PFP pickup clutch, are damaged.
2. Check to see if each pulley or the timing belt of the PFP pickup assembly is damaged.

YES ↓

Check to see if there are any foreign obstacles on the recording paper path.

E16 **Tray 4 feeding jam**

When recording paper is left on the recording path, remove it. If this error occurs frequently, the following items should be checked.

Is the PFP paper feed sensor (Lower) working? (using the test mode 04, Sensor Test, DATA No.18 Bit 4)

NO →

1. Check if each connector between the PFP paper feed sensor (Lower) and the PFP PWA (CN243) is disconnected.
2. Check if each connector between the PFP PWA (CN241) and the PFC PWA (CN206) is disconnected.
3. Check if each connector between the PFC PWA (CN201) and the relay PWA (CN36) is disconnected.
4. Check if each connector pin is removed or the harness is broken.
5. Check if any conductor pattern on the PFP, PFC, relay and main PWA is open- or short-circuited.
6. Replace the PFP paper feed sensor (Lower).
7. Replace the PFP PWA.
8. Replace the PFC PWA.
9. Replace the relay PWA.
10. Replace the main PWA.

YES ↓

Activate the CM pickup clutch. (using test mode 10, Output Test, CODE 227)

Do the pickup and pickup feed rollers, which are installed on the lower side of the PFP rotate when the PFP main motor is driven? (using test mode 10, Output Test, CODE 109)

NO →

1. Check to see if the gears and belt which convey the power of the PFP main motor to the CM pickup clutch, are damaged.
2. Check to see if each pulley or the timing belt of the PFP pickup assembly is damaged.

YES ↓

Check to see if there are any foreign obstacles on the recording paper path.

4.1.3 Transporting jam for the optional trays

E31 **Paper not reach to feed sensor from tray 2**

E32 **Paper not reach to feed sensor from tray 3/4**

E33 **Paper not reach to feed sensor from LCF**

When recording paper is left on the recording paper path, remove it. If this error occurs frequently, the following items should be checked.

Is the feed sensor working? (using the test mode 04, Sensor Test, DATA No. 6 Bit 2)

NO →

1. Check if each connector between the feed sensor and the relay PWA (CN33) is disconnected.
2. Check if each connector pin is removed or the harness is broken.
3 Check if any conductor pattern on the relay and main PWA is open- or short-circuited.
4. Replace the feed sensor.
5. Replace the relay PWA.
6. Replace the main PWA.

YES ↓

Check to see if there are any foreign obstacles on the recording paper path.

E34 **Paper not reach to option cassette feed sensor from tray 3/4**

E36 **Paper not reach to option cassette feed sensor from LCF**

When recording paper is left on the recording path, remove it. If this error occurs frequently, the following items should be checked.

Where was the paper stopped?

- Near the registration roller

  Is the 2nd feed roller sensor working? (using the test mode 04, Sensor Test, DATA No. 20 Bit 6)

  NO →
  1. Check if each connector between the 2nd feed roller sensor and the PFC PWA (CN205) is disconnected.
  2. Check if each connector between the PFC PWA (CN201) and the relay PWA (CN36) is disconnected.
  3. Check if each connector pin is removed or the harness is broken.
  4. Check if any conductor pattern on the PFC, relay and main PWA is open- or short-circuited.
  5. Replace the 2nd feed roller sensor.
  6. Replace the PFC PWA.
  7. Replace the relay PWA.
  8. Replace the main PWA.

  YES ↓

  Check to see if there are any foreign obstacles on the recording paper path.

- Before reaching the 2nd feed roller

  Is the 2nd feed roller clutch working? (using the test mode 10, Output Test, CODE 203)

  NO →
  1. Check if each connector between the 2nd feed roller clutch and the PFC PWA (CN205) is disconnected.
  2. Check if each connector between the PFC PWA (CN201) and the relay PWA (CN36) is disconnected.
  3. Check if each connector pin is removed or the harness is broken.
  4. Check if any conductor pattern on the PFC, relay and main PWA is open- or short-circuited.
  5. Replace the 2nd feed roller clutch.
  6. Replace the PFC PWA.
  7. Replace the relay PWA.
  8. Replace the main PWA.

  YES ↓

  Check to see if there are any foreign obstacles on the recording paper path.

Near the PFP upper transport roller

Is the PFP clutch working? (using the test mode 10, Output Test, CODE 225)

NO

1. Check if each connector between the PFP clutch and the PFP PWA (CN244) is disconnected.
2. Check if each connector between the PFP PWA (CN241) and the PFC PWA (CN206) is disconnected.
3. Check if each connector between the PFC PWA (CN201) and the relay PWA (CN36) is disconnected.
4. Check if each connector pin is removed or the harness is broken.
5. Check if any conductor pattern on the PFP, PFC, relay and main PWA is open- or short-circuited.
6. Replace the PFP clutch.
7. Replace the PFP PWA.
8. Replace the PFC PWA.
9. Replace the relay PWA.
10. Replace the main PWA.

YES

Check to see if there are any foreign obstacles on the recording paper path.

E35 Paper not reach to PFP paper feed sensor (upper) from tray 4

Is the PFP paper feed sensor (upper) working? (using the test mode 04, Sensor Test, DATA No.17 Bit 4)

NO →

1. Check if each connector between the PFP paper feed sensor (upper) and the PFP PWA (CN243) is disconnected.
2. Check if each connector between the PFP PWA (CN241) and the PFC PWA (CN206) is disconnected.
3. Check if each connector between the PFC PWA (CN201) and the relay PWA (CN36) is disconnected.
4. Check if each connector pin is removed or the harness is broken.
5. Check if any conductor pattern on the PFP, PFC, relay and main PWA is open- or short-circuited.
6. Replace the PFP paper feed sensor (upper).
7. Replace the PFP PWA.
8. Replace the PFC PWA.
9. Replace the relay PWA.
10. Replace the main PWA.

YES ↓

Is the PFP clutch working? (using the test mode 10, Output Test, CODE 225)

NO →

1. Check if each connector between the PFP clutch and the PFP PWA (CN244) is disconnected.
2. Check if each connector between the PFP PWA (CN241) and the PFC PWA (CN206) is disconnected.
3. Check if each connector between the PFC PWA (CN201) and the relay PWA (CN36) is disconnected.
4. Check if each connector pin is removed or the harness is broken.
5. Check if any conductor pattern on the PFP, PFC, relay and main PWA is open- or short-circuited.
6. Replace the PFP clutch.
7. Replace the PFP PWA.
8. Replace the PFC PWA.
9. Replace the relay PWA.
10. Replace the main PWA.

YES

Activate the PFP clutch. (using test mode 10, Output Test, CODE 225)

Does the PFP upper transport roller rotate when the PFP main motor is driven? (using test mode 10, Output Test, CODE 109)

NO → Check to see if the gears and belt which convey the power of the PFP main motor to the PFP upper transport roller, are damaged.

YES

Check to see if there are any foreign obstacles on the recording paper path.

4.1.4 Paper jam if some cover is opened

E41 **Front cover or side cover is opened during copying**

Is the front cover or side cover opened?

YES → Close the front cover or side cover.

NO ↓

Is the front cover switch working? (using the test mode 04, Sensor Test, DATA No. 7 Bit 2)

NO →
1. Check if the connector CN52 on the relay PWA is unplugged.
2. Check if each connector pin is removed or the harness is broken.
3. Check if any conductor pattern on the relay and main PWA is open- or short-circuited.
4. Replace the front cover switch.
5. Replace the relay PWA.
6. Replace the main PWA.

YES ↓

Is the interlock switch for the side cover working? (using the test mode 04, Sensor Test, DATA No. 6 Bit 1)

NO →
1. Check if the connector CN5 on the PSU is unplugged.
2. Check if each connector pin is removed or the harness is broken.
3. Check if any conductor pattern on the relay PWA and PSU is open- or short-circuited.
4. Replace the side cover switch.
5. Replace the relay PWA.
6. Replace the PSU.

YES ↓

Check to see if the front cover switch or the interlock switch is properly attached.

E42 PFU side door is opened during copying

Is the PFU side cover opened?

NO → Close PFU side cover.

YES ↓

Is the PFU cover open switch working? (using the test mode 04, Sensor Test, DATA No. 16 Bit 2)

NO →

1. Check if each connector between the PFU cover open switch and the PFC PWA (CN208) is disconnected.
2. Check if each connector between the PFC PWA (CN201) and the relay PWA (CN36) is disconnected.
3. Check if each connector pin is removed or the harness is broken.
4. Check if any conductor pattern on the PFC, relay and main PWA is open- or short-circuited.
5. Replace the PFU cover open switch.
6. Replace the PFC PWA.
7. Replace the relay PWA.
8. Replace the main PWA.

YES ↓

Check to see if the PFU cover open switch is properly attached.

E43 **ADU is opened during copying**

Is the ADU mounted securely on the copier?

NO → Mount the ADU securely to the copier.

YES ↓

Is the ADU cover open switch working? (using the test mode 04, Sensor Test, DATA No. 19 Bit 3)

NO →

1. Check if each connector between the ADU cover open switch and the ADU PWA (CN217) is disconnected.
2. Check if each connector between the ADU PWA (CN211) and the PFC PWA (CN203) is disconnected.
3. Check if each connector between the PFC PWA (CN201) and the relay PWA (CN36) is disconnected.
4. Check if each connector pin is removed or the harness is broken.
5. Check if any conductor pattern on the ADU, PFC, relay and main PWA is open- or short-circuited.
6. Replace the ADU cover open switch.
7. Replace the ADU PWA.
8. Replace the PFC PWA.
9. Replace the relay PWA.
10. Replace the main PWA.

YES ↓

Check to see if the ADU cover open switch is properly attached.

E45 **Side cover of LCF opened during printing**

Is the LCF side cover open?

YES → Remove paper if there is any. Close the cover.

NO ↓

Is the LCF side cover open switch working? (using the test mode 04, Sensor Test, DATA No. 18 Bit4)

NO →

1. Check the connector of the LCF side cover open switch for disconnection.
2. Check the connectors CN100 and CN106 on the LCF PWA for disconnection.
3. Check the connector CN206 on the PFC PWA for disconnection.
4. Check the connector pins for disconnection and the harnesses for breaks.
5. Check the LCF PWA and PFC PWA for short-circuits and breaks.
6. Replace the LCF side cover opening/closing switch.
7. Replace the LCF PWA.
8. Replace the PFC PWA.

YES ↓

1. Replace the LCF side cover open switch.
2. Replace the LCF PWA.
3. Replace the PFC PWA.

4.1.5 Paper transporting jam at the ADF

E71 **Original feeding jam at the feeding area of the ADF**

When original is left inside the ADF, remove it. If this error occurs frequently, the following items should be checked.

[Two or more originals are fed simultaneously.]

Have too many originals been placed?
- YES → Reset the originals, following the specification.
- NO ↓

Are the original sheets curled or folded too much?
- YES → Flatten and reset the originals.
- NO ↓

Are different-size originals placed together?
- YES → Set only one-size originals.
- NO ↓

Is the separation pad stained?
- YES → Clean the separation pad.

[The original does not reach the feed roller.]

Does the paper thickness satisfy the specifications?
- NO → Reset the originals, following the specification.
- YES ↓

Is the pickup roller or feed roller stained?
- YES → Clean the roller.
- NO ↓

Is the transporting force of the pickup roller or the feed roller insufficient?
- YES → Replace the rollers.

E72 **Original transporting jam at the transporting area of the ADF**

E73 **Original exiting at the exiting area of the ADF**

When original is left inside the ADF, remove it. If this error occurs frequently, the following items should be checked.

Is the read roller dirty?

YES → Clean the roller.

NO ↓

Check to see if there are any foreign obstacles on the original path.

4.1.6 Paper transporting jam at the RADF

E71 **Original feeding jam at the feeding area of RADF**

When original is left inside the RADF, remove it. If this error occurs frequently, the following items should be checked.

[Two or more originals are fed simultaneously.]

Have too many originals been placed?

- YES → Reset the originals, following the specification.
- NO ↓

Are the original sheets curled or folded too much?

- YES → Flatten and reset the originals.
- NO ↓

Are different-size originals placed together?

- YES → Set only one-size originals.
- NO ↓

Is the separation roller stained?

- YES → Clean the separation roller.

[The original does not reach the feed roller.]

Does the paper thickness satisfy the specifications?

- NO → Reset the originals, following the specification.
- YES ↓

Is the pickup roller, feed roller or separation roller stained?

- YES → Clean the roller.
- NO ↓

Is the transporting force of the pickup roller, feed roller or separation roller insufficient?

- YES → Replace the rollers.

E72 **Original transporting jam at transporting area of the RADF.**

E73 **Original exiting at the exiting area of RADF.**

When original is left inside the RADF, remove it. If this error occurs frequently, the following items should be checked.

Is the aligning roller, lead roller or exit roller dirty?

YES → Clean the roller.

NO ↓

Check to see if there are any foreign obstacles on the original path.

E74 **Original reversing jam**

When recording paper is left inside the machine, remove it. If this error occurs frequently, the following items should be checked.

Are the lead roller and reverse roller dirty?

YES → Clean the rollers.

NO ↓

Is the reverse flapper working properly?

YES → Check to see if there any foreign obstacles on the original path.

↓

Adjust the reverse solenoid.

4.1.7 Paper jam in finisher

EA1 **Finisher paper transport delay jam**

Is there paper remaining on the transport path in the finisher or main unit?

YES → Remove the paper.

NO ↓

Is the connector J10 on the finisher controller PWA disconnected?

Is the harness connecting the finisher controller PWA and inlet paper sensor broken?

YES → Connect the connector securely. Replace the harness.

NO ↓

Is the inlet paper sensor working properly? (Check the movement of the actuator.)

NO →
1. Connect the connector of the inlet paper sensor securely.
2. Attach the actuator securely if its shaft is out of place.
3. Replace the inlet paper sensor.

YES ↓

Replace the finisher controller PWA.

EA2 **Finisher paper transport stop jam**

Is there paper remaining on the transport path in the finisher or main unit?

YES → Remove the paper.

NO ↓

Is the connector J10 on the finisher controller PWA disconnected?

Is the harness connecting the finisher controller PWA and inlet paper sensor broken?

YES → Connect the connector securely. Replace the harness.

NO ↓

Is the inlet paper sensor working properly? (Check the movement of the actuator.)

NO →
1. Connect the connector of the inlet paper sensor securely.
2. Attach the actuator securely if its shaft is out of place.
3. Replace the inlet paper sensor.

YES ↓

Replace the finisher controller PWA.

EA3 **Paper remaining in finisher at power ON**

Is there paper remaining on the transport path in the finisher?

YES → Remove the paper.

NO ↓

Is the connector J10 on the finisher controller PWA disconnected?

Is the harness connecting the finisher controller PWA and inlet paper sensor broken?

YES → Connect the connector securely. Replace the harness.

NO ↓

Is the inlet paper sensor working properly? (Check the movement of the actuator.)

NO →
1. Connect the connector of the inlet paper sensor securely.
2. Attach the actuator securely if its shaft is out of place.
3. Replace the inlet paper sensor.

YES ↓

Replace the finisher controller PWA.

EA4 **Finisher front cover opened during printing**

Is there paper remaining on the transport path in the finisher or main unit?

YES → Remove the paper.

NO ↓

Is the finisher connected to the main unit?

NO → Connect the finisher to the main unit.

YES ↓

Is the connector J11 on the finisher controller PWA disconnected?

Is the harness connecting the finisher controller PWA and finisher joint sensor broken?

YES → Connect the connector securely. Replace the harness.

NO ↓

Is the inlet paper sensor working properly?

NO →
1. Connect the connector of the finisher joint sensor securely.
2. Replace the finisher joint sensor.

YES ↓

Replace the finisher controller PWA.

EA5 Finisher stapling jam

Is there paper remaining on the transport path in the finisher or main unit or on the stapling tray?

YES → Remove the paper.

NO ↓

Is the jam cleared by taking off the staple cartridge from the finisher and removing the staple sheet which was slid out of the staple case?

YES → End

NO ↓

Is the connector J8 on the finisher controller PWA disconnected?
Is the harness connecting the finisher controller PWA and stapling home position sensor broken?

YES → Connect the connector securely. Replace the harness.

NO ↓

Is the stapling home position sensor working properly?

NO →
1. Connect the connector of the stapling home position sensor securely.
2. Replace the stapling home position sensor.

YES ↓

Replace the finisher controller PWA.

EA6 Finisher early arrival jam

Is there paper remaining on the transport path in the finisher or main unit?

YES → Remove the paper.

NO ↓

Is the connector J10 on the finisher controller PWA disconnected?
Is the harness connecting the finisher controller PWA and inlet paper sensor broken?

YES → Connect the connector securely. Replace the harness.

NO ↓

Is the inlet paper sensor working properly? (Check the movement of the actuator.)

NO →
1. Connect the connector of the inlet paper sensor securely.
2. Attach the actuator securely if its shaft is out of place.
3. Replace the paper inlet sensor.

YES ↓

Replace the finisher controller PWA.

EA7 **Stack transport jam before stapling**

Is there paper remaining on the transport path in the finisher or main unit?

YES → Remove the paper.

NO ↓

Is the connector J9 on the finisher controller PWA disconnected?

Is the harness connecting the finisher controller PWA and stack delivery lever home position sensor broken?

YES → Connect the connector securely. Replace the harness.

NO ↓

Is the stack delivery lever home position sensor working properly?

NO →
1. Connect the connector of the stack delivery lever home position sensor securely.
2. Replace the stack delivery lever home position sensor.

YES ↓

Replace the finisher controller PWA.

EAF **Stapled stack transport jam**

Is there paper remaining on the transport path in the finisher or main unit?

YES → Remove the paper.

NO ↓

Is the connector J10 on the finisher controller PWA disconnected?

Is the harness connecting the finisher controller PWA and returning roller home position sensor broken?

YES → Connect the connector securely. Replace the harness.

NO ↓

Is the returning roller home position sensor working properly?

NO →
1. Connect the connector of the returning roller home position sensor securely.
2. Replace the returning roller home position sensor.

YES ↓

Replace the finisher controller PWA.

4.1.8 Drive system service call

C01 **Abnormal operation of the main motor**

1. Check if each connector between the main motor (CN1, CN2) and the relay PWA (CN29, CN28) is disconnected.
2. Check if each connector between the relay PWA (CN21) and the main PWA (CN15) is disconnected.
3. Check if each connector pin is removed or the harness is broken.
4. Check if any conductor pattern on the main motor, relay and main PWA is open- or short-circuited.
5. Replace the main motor.
6. Replace the relay PWA.
7. Replace the main PWA.

C04 **Abnormal operation of the PFP main motor**

Is the PFP main motor working? (using the test mode 10. Output Test, CODE 109)

NO →
1. Check if each connector between the PFP main motor (CN1, CN2) and the PFP PWA (CN246) is disconnected.
2. Check if each connector between the PFP PWA (CN241, CN242) and the PFC PWA (CN206, CN207) is disconnected.
3. Check if each connector between the PFC PWA (CN201, CN202) and the relay PWA (CN35, CN36) is disconnected.
4. Check if each connector pin is removed or the harness is broken.
5. Check if any conductor pattern on the PFP main motor, PFP, PFC, relay and main PWA is open- or short-circuited.
6. Replace the PFP main motor.
7. Replace the PFP PWA.
8. Replace the PFC PWA
9. Replace the relay PWA.
10. Replace the main PWA.

YES ↓

Is the LED on the PFP main motor lit continuously?

NO →
1. Check if the connector pin is removed or the harness is broken.
2. Check if any conductor pattern on the PFP main motor, PFP and PFC PWA is open- or short-circuited.
3. Replace the PFP main motor.
4. Replace the PFP PWA.
5. Replace the PFC PWA.
6. Replace the relay PWA.
7. Replace the main PWA.

YES ↓

Does the PLL lock signal CN246-8 on the PFP PWA continuously display ‘L’?

NO →
1. Check if any conductor pattern on the PFP and PFC PWA is open- or short-circuited.
2. Replace the PFP PWA.
3. Replace the PFC PWA.
4. Replace the relay PWA.
5. Replace the main PWA.

YES ↓

1. Check if any conductor pattern on the PFC PWA is open- or short-circuited.
2. Replace the PFC PWA.

C06 **Abnormal operation of the LCF transport motor**

Is the LCF transport motor working? (using the test mode 10. Output Test, CODE 270)

NO →

1. Check if each connector between the LCF transport motor (CN1) and the LCF PWA (CN102) is disconnected.
2. Check if each connector between the LCF PWA (CN100, CN101) and the PFC PWA (CN206, CN207) is disconnected.
3. Check if each connector between the PFC PWA (CN201, CN202) and the relay PWA (CN35, CN36) is disconnected.
4. Check if each connector pin is removed or the harness is broken.
5. Check if any conductor pattern on the LCF transport motor, LCF, PFC, relay and main PWA is open- or short-circuited.
6. Replace the LCF transport motor.
7. Replace the LCF PWA.
8. Replace the PFC PWA.
9. Replace the relay PWA.
10. Replace the main PWA.

YES ↓

Does the PLL lock signal CN102-3 on the LCF PWA continuously display 'L'?

NO →

1. Check if any conductor pattern on the LCF and PFC PWA is open- or short-circuited.
2. Replace the LCF PWA.
3. Replace the PFC PWA.
4. Replace the relay PWA.
5. Replace the main PWA.

YES ↓

1. Check if any conductor pattern on the PFC PWA is open- or short-circuited.
2. Replace the PFC PW

4.1.9 Temporary paper supply mechanism service call

C13 **Abnormal operation of the paper tray in the main body**

Does the tray move up? (using the test mode 10, Output Test, CODE 242)

NO →
1. Check if each connector between the tray-up assembly and the relay PWA (CN37) is disconnected.
2. Check if each connector pin is removed or the harness is broken.
3. Check if any conductor pattern on the relay and main PWA is open- or short-circuited.
4. Replace the tray-up motor of the tray-up assembly.
5. Replace the relay PWA.
6. Replace the main PWA.

YES ↓

Is the pickup sensor working? (using the test mode 04, Sensor Test, DATA No. 7 Bit 0)

NO →
1. Check if each connector between the pickup sensor and the relay PWA (CN37) is disconnected.
2. Check if the slit reaches the pickup sensor.
3. Check if the connector pin is removed or the harness is broken.
4. Check if any conductor pattern on the relay and main PWA is open- or short-circuited.
5. Replace the pickup sensor.
6. Replace the relay PWA.
7. Replace the main PWA.

YES ↓

1. Check if any conductor pattern on the main PWA is open- or short-circuited.
2. Replace the main PWA.

C14 **Abnormal operation of the 2nd tray**

Does the PFU tray move up? (using the test mode 10, Output Test, CODE 243)

NO →

1. Check if each connector between the PFU tray-up assembly and the PFC PWA (CN208) is disconnected.
2. Check if each connector between the PFC PWA (CN201, CN202) and the relay PWA (CN35, CN36) is disconnected.
3. Check if each connector pin is removed or the harness is broken.
4. Check if any conductor pattern on the PFC, relay and main PWA is open- or short-circuited.
5. Replace the PFU tray-up motor of the tray-up assembly.
6. Replace the PFC PWA.
7. Replace the relay PWA.
8. Replace the main PWA.

YES ↓

Is the PFU pickup sensor working? (using the test mode 04, Sensor Test, DATA No. 16 Bit 0)

NO →

1. Check if each connector between the PFU pickup sensor and the PFC PWA (CN208) is disconnected.
2. Check if each connector between the PFC PWA (CN201, CN202) and the relay PWA (CN35, CN36) is disconnected.
3. Check if the slit reaches the PFU pickup sensor.
4. Check if the connector pin is removed or the harness is broken.
5. Check if any conductor pattern on the PFC, relay and main PWA is open- or short-circuited.
6. Replace the PFU pickup sensor.
7. Replace the PFC PWA.
8. Replace the relay PWA.
9. Replace the main PWA.

YES ↓

1. Check if any conductor pattern on the PFC PWA is open- or short-circuited.
2. Replace the PFC PWA.

C15 **Abnormal operation of the 3rd tray in the PFP**

Does the PFP tray (upper) move up? (using the test mode 10, Output Test, CODE 275)

NO →

1. Check if each connector between the PFP tray-up assembly (upper) and the PFP PWA (CN244) is disconnected.
2. Check if each connector between the PFP PWA (CN241, CN242) and the PFC PWA (CN206, CN207) is disconnected.
3. Check if each connector between the PFC PWA (CN201, CN202) and the relay PWA (CN35, CN36) is disconnected.
4. Check if each connector pin is removed or the harness is broken.
5. Check if any conductor pattern on the PFP, PFC, relay and main PWA is open- or short-circuited.
6. Replace the PFP tray-up motor of the PFP tray-up assembly (upper).
7. Replace the PFP PWA.
8. Replace the PFC PWA.
9. Replace the relay PWA.
10. Replace the main PWA.

YES ↓

Is the PFP pickup sensor working? (using the test mode 04, Sensor Test, DATA No. 17 Bit 0)

NO →

1. Check if each connector between the PFP pickup sensor and the PFP PWA (CN247) is disconnected.
2. Check if each connector between the PFP PWA (CN241) and the PFC PWA (CN206) is disconnected.
3. Check if each connector between the PFC PWA (CN201, CN202) and the relay PWA (CN35, CN36) is disconnected.
4. Check if the slit reaches the PFP pickup sensor.
5. Check if each connector pin is removed or the harness is broken.
6. Check if any conductor pattern on the PFP, PFC, relay and main PWA is open- or short-circuited.
7. Replace the PFP pickup sensor.
8. Replace the PFP PWA.
9. Replace the PFC PWA.
10. Replace the relay PWA.
11. Replace the main PWA.

YES ↓

1. Check if any conductor pattern on the PFC PWA is open- or short-circuited.
2. Replace the PFC PWA.

C16 **Abnormal operation of the 4th tray in the PFP**

Does the PFP tray (lower) move up? (using the test mode 10, Output Test, CODE 276)

NO →

1. Check if each connector between the PFP tray-up assembly (lower) and the PFP PWA (CN244) is disconnected.
2. Check if each connector between the PFP PWA (CN241, CN242) and the PFC PWA (CN206, CN207) is disconnected.
3. Check if each connector between the PFC PWA (CN201, CN202) and the relay PWA (CN35, CN36) is disconnected.
4. Check if the connector pin is removed or the harness is broken.
5. Check if any conductor pattern on the PFP, PFC, relay and main PWA is open- or short-circuited.
6. Replace the PFP tray-up motor of the PFP tray-up assembly (lower).
7. Replace the PFC PWA.
8. Replace the relay PWA.
9. Replace the main PWA.

YES ↓

Is the CM pickup sensor working? (using the test mode 04, Sensor Test, DATA No.18 Bit 0)

NO →

1. Check if each connector between the CM pickup sensor and the PFP PWA (CN248) is disconnected.
2. Check if each connector between the PFP PWA (CN241) and the PFC PWA (CN206) is disconnected.
3. Check if each connector between the PFC PWA (CN201, CN202) and the relay PWA (CN35, CN36) is disconnected.
4. Check if the slit reaches the CM pickup sensor.
5. Check if the connector pin is removed or the harness is broken.
6. Check if any conductor pattern on the PFP, PFC, relay and main PWA is open- or short-circuited.
7. Replace the CM pickup sensor.
8. Replace the PFP PWA.
9. Replace the PFC PWA.
10. Replace the relay PWA.
11. Replace the main PWA.

YES ↓

1. Check if any conductor pattern on the PFC PWA is open- or short-circuited.
2. Replace the PFC PWA.

C18 **LCF tray-up motor is abnormal**

Does the LCF tray move ? (using the test mode 10, Output Test, CODE271.)

NO →
1. Check the connector of the LCF tray-up motor for disconnection.
2. Check the connectors CN100, CN101 and CN103 on the LCF PWA for disconnection.
3. Check the connector CN206 on the PFC PWA for disconnection.
4. Check the connector pins for disconnection and the harnesses for breaks.
5. Check the LCF PWA and PFC PWA for short-circuits and breaks.
6. Replace the LCF PWA.
7. Replace the PFC PWA.

YES ↓

Is the LCF tray-up sensor working? (using the test mode 04, Sensor Test, DATA No. 18 Bit 2.)

NO →
1. Check the connector of the LCF tray-up sensor for disconnection.
2. Check the connectors CN100, CN104 and CN105 on the LCF PWA for disconnection.
3. Check the connector CN206 on the PFC PWA for disconnection.
4. Check if the slit reaches the LCF tray-up sensor.
5. Check the connector pins for disconnection and the harnesses for breaks.
6. Check the LCF PWA and PFC PWA for short-circuits and breaks.
7. Replace the LCF tray-up sensor.
8. Replace the LCF PWA.
9. Replace the PFC PWA.

YES ↓

1. Check the PFC PWA for short-circuits and breaks.
2. Replace the PFC PWA.

C19 **LCF end fence motor is abnormal**

Is the end fence working? (using the test mode 10, Output Test, CODE268.)

NO →
1. Check the connector of the LCF end fence motor for disconnection.
2. Check the connectors CN100, CN101 and CN103 on the LCF PWA for disconnection.
3. Check the connector CN206 on the PFC PWA for disconnection.
4. Check the connector pins for disconnection and the harnesses for breaks.
5. Check the LCF PWA and PFC PWA for short-circuits and breaks.
6. Replace the end fence motor.
7. Replace the LCF PWA.
8. Replace the PFC PWA.

YES ↓

Are the end fence stop position sensor and end fence home position sensor working? (using the test mode 04, Sensor Test, DATA 18 Bit 6 & 7.)

NO →
1. Check the connector of the sensor for disconnection.
2. Check the connectors CN100 and CN107 on the LCF PWA for disconnection.
3. Check the connector CN206 on the PFC PWA for disconnection.
4. Check if the slit reaches the sensor.
5. Check the connector pins for disconnection and the harnesses for breaks.
6. Check the LCF PWA and PFC PWA for short-circuits and breaks.
7. Replace the LCF PWA.
8. Replace the PFC PWA.

YES ↓

1. Check the PFC PWA for short-circuits and breaks.
2. Replace the PFC PWA.

4.1.10 Optical system service call

C21 **Carriage initialization error**

Is the wire or belt inside the scanner unit broken? Does the wire or belt inside the scanner unit unfasten?

YES → Replace the wire or belt.

NO ↓

When the original glass is removed and the carriage is moved to the center, does the drive system operate abnormally, such as racing or getting stuck?

YES → Repair or replace the drive system.

NO ↓

Does the carriage move to the home position when the power is turned on?

YES →
1. Check if the home position sensor is not properly installed.
2. Check if the connector of the home position sensor is disconnected.
3. Check if the connector pin is removed or the harness is disconnected.
4. Check if any conductor pattern on the scanner control PWA is open- or short-circuited.
5. Replace the home position sensor.
6. Replace the scanner control PWA.
7. Replace the main PWA.

NO ↓

1. Check if the scanner motor cable is damaged, short-circuited, or the connector pin is removed.
2. Check if any conductor pattern on the scanner control PWA is open- or short-circuited.
3. Replace the scanner motor.
4. Replace the scanner control PWA.
5. Replace the main PWA.

C25 **Scanner unit watch dog error**

This error occurs when the watchdog register fails to be cleared within every certain time interval on the scanner control PWA (occurrence of a watchdog interrupt).

If C25 still occurs even after the power is turned off and then on, replace the scanner control PWA.

C26 **Peak detection error**

Does the lamp light up during initialization after the power is turned on?

NO (=The lamp does not light)

1. Check if the connector of the lamp is disconnected, or the harness is broken.
2. Check if the connector of the inverter is disconnected, or the harness is broken.
3. Check if any conductor pattern on the inverter and scanner control PWA is open- or short-circuited.
4. Replace the lamp.
5. Replace the inverter.
6. Replace the scanner control PWA.
7. Replace the relay PWA.
8. Replace the main PWA.

YES (=The lamp lights)

1. Check if the shading plate behind the document scale is dirty.
2. Check if the lens can be seen when looking the first carriage from the top.
3. Check if the optical system is extremely dirty or damaged.
4. Check if the FFC of the CCD PWA is disconnected.
5. Check if any conductor pattern on the CCD and scanner control PWA is open- or short-circuited.
6. Replace the CCD unit.
7. Replace the scanner control PWA.
8. Replace the relay PWA.
9. Replace the main PWA.

4.1.11 Process system service call

C38 **Replaced process unit error**

Replace the relay PWA.

Replace the main PWA.

4.1.12 Fuser system service call

C41 **Abnormality of the thermistor or heater disconnection when the power is turned on**

Note: To prevent the danger, the following 1 and 2 should be done after the power-cord plug is unplugged.

1. Check the thermistor.

(1) Is the connector between the heater thermistor 1/2 and the relay PWA (CN44) disconnected?

(2) Is the harness of the heater thermistor 1/2 broken?

(3) Is the connector pin removed?

(4) Does the heater thermistor 1/2 connect to the heat roller firmly?

2. Check the heater lamp

(1) Is the heater lamp broken?

(2) Is the connector between the heater lamp and the PSU (CN3) disconnected?

(3) Is the heater thermostat open?

(4) Is the switching power supply broken?

3. Check the relay PWA.

(1) Is the connector CN44 disconnected?

(2) Is the connector pin removed?

(3) Is there a circuit abnormality, such as open or short circuit?

(4) Replace the relay PWA.

4. Reset the status counter

(1) The following processes are carried out after completing repair of the cause for the C41 error message.

(2) Press the [0] and [8] keys simultaneously to turn on the power.

(3) Input 400 using the numeric keys, and press the start key.

(4) Change the displayed status counter from [2] to [0], and press the SET key (Reset C41).

(5) Turn the power on again, and check that it returns to the normal standby mode.

C43 **Thermistor abnormal**

C44 **Heater disconnection**

1 - 3 is the same check as for the C41.

With 4, the displayed status counter for the C43 is [4] or [6], and the displayed status counter for the C44 is [5], [7], or [9] so change these displayed status counters to [0] using the same procedure as for C41.

C45 **Thermistor 2 abnormality**

1. Check the thermistor 2

(1) Is the connector between the heater thermistor 2 and the relay PWA (CN44) disconnected?

(2) Is the harness of the heater thermistor 2 broken?

(3) Is the connector pin removed?

(4) Does the heater thermistor 2 connect to the heat roller firmly?

2. Check the relay PWA

(1) Is the connector CN44 disconnected?

(2) Is the connector pin removed?

(3) Is there a circuit abnormality, such as open or short circuit?

(4) Replace the relay PWA.

3. Reset the status counter

Change the status counter from 8 to 0 using the same procedure as for C41.

4.1.13 Communications system service call

C56 **Communications error between the PFC and the CPU on the main PWA**

1. Check if the connector CN36 or CN35 on the relay PWA is disconnected.
2. Check if any conductor pattern (PFRXD, PFREQ, PFACK, MACK/PF, PFTXD, or MREQ/PF between the IC, IC2 and CN36) on the relay PWA is open- or short-circuited.
3. Replace the relay PWA.
4. Replace the PFC PWA.
5. Replace the main PWA.

C57 **Communication error between the IPC PWA and the CPU on the main PWA**

1. Check the circuit patterns on the main PWA for short-circuits and breaks.
2. Check the IPC PWA for short-circuits and breaks.
3. Replace the IPC PWA.
4. Replace the main PWA.

C58 **Communication error between the IPC PWA and the finisher**

1. Check if the specified finisher is attached.
2. Check the IPC PWA for short-circuits and breaks.
3. Check if the pin of the connector being connected to the connector J2 on the IPC PWA is disconnected or the harness is breaking.
4. Check if the fuse F3 of the power supply unit is blown.
5. Check the control PWA in the finisher for short-circuits and breaks.
6. Check the connections between the finisher and copier if the connector pins are disconnected, or the harnesses are breaking.
7. Replace the IPC PWA.
8. Replace the main PWA.

4.1.14 ADF or RADF system service call

C71 **RADF DC motor lock error**

Is the RADF DC motor working (forward/reverse)? (using the test mode 10, Output Test, CODE 281/282)

NO →

1. Check if each connector between the RADF DC motor and the RADF PWA is disconnected.
2. Check if each connector between RADF PWA and the scanner control PWA is disconnected.
3. Check if each connector between the scanner control PWA and the main PWA is disconnected.
4. Check if each connector pin is removed or the harness is broken.
5. Check if any conductor pattern on the RADF, scanner control and main PWA is open- or short-circuited.
6. Replace the RADF DC motor.
7. Replace the RADF PWA.
8. Replace the scanner control PWA.
9. Replace the main PWA.

YES ↓

1. Check if the RADF DC motor pulley is mounted to the axis of the RADF DC motor and rotates properly.
2. Check if any foreign obstacles are on the detection slit of the RADF DC motor pulley. Remove such foreign obstacles, if any.
3. Check if any foreign obstacles blocking the slit of the RADF DC motor sensor. Remove such foreign obstacles, if any.
4. Replace the RADF DC motor pulley.

C73 **RADF EEPROM initialization error**

1. Check if any conductor pattern (IC12 and surrounding area) on the RADF PWA is open- or short-circuited.
2. Replace the RADF PWA.

C74 **RADF SB sensor adjustment error**

1. Check there are any foreign obstacles between the sensor and the reflection mirror.
2. Check if the sensor or mirror is dirty.
3. Check if each connector between the RADF SB sensor and the RADF PWA (CN4) is disconnected.
4. Check if each connector between the RADF PWA and the scanner control PWA (CN6) is disconnected.
5. Check if each connector between the scanner control PWA (CN4) and the main PWA (CN8) is disconnected.
6. Check if each connector pin is removed or the harness is broken.
7. Check if any conductor pattern on the RADF, scanner control and main PWA is open- or short-circuited.
8. Replace the RADF SB sensor.
9. Replace the RADF PWA.
10. Replace the scanner control PWA.
11. Replace the main PWA.

C81 **RADF fan motor error**

Is the motor working? (using the test mode 10, Output Test, CODE 298)

YES → Check for foreign obstacles on the blade and remove if any.

NO ↓

1. Check if each connector between the RADF FAN motor and the RADF PWA (CN9) is disconnected.
2. Check if each connector between the RADF PWA and the scanner control PWA (CN6) is disconnected.
3. Check if each connector between the scanner control PWA (CN4) and the main PWA (CN8) is disconnected.
4. Check if each connector pin is removed or the harness is broken.
5. Check if any conductor pattern on the RADF, scanner control and main PWA is open- or short-circuited.
6. Replace the RADF FAN motor sensor.
7. Replace the RADF PWA.
8. Replace the scanner control PWA.
9. Replace the main PWA.

C82 **Read Sensor Adjustment Error (ADF/RADF)**

(ADF)

1. Check there are any foreign obstacles between the read sensor and the reflection mirror.
2. Check if the read sensor or reflection mirror is dirty.
3. Check if each connector between the read sensor and the ADF PWA (CN4) is disconnected.
4. Check if each connector between the ADF PWA (CN1) and the scanner control PWA (CN6) is disconnected.
5. Check if each connector between the scanner control PWA (CN4) and the main PWA (CN8) is disconnected.
6. Check if each connector pin is removed or the harness is broken.
7. Check if any conductor pattern on the ADF, scanner control and main PWA is open- or short-circuited.
8. Replace the read sensor.
9. Replace the ADF PWA.
10. Replace the scanner control PWA.
11. Replace the main PWA.

(RADF)

1. Check there are any foreign obstacles between the read sensor and the reflection mirror.
2. Check if the read sensor or reflection mirror is dirty.
3. Check if each connector between the read sensor and the RADF PWA (CN6) is disconnected.
4. Check if each connector between the RADF PWA and the scanner control PWA (CN6) is disconnected.
5. Check if each connector between the scanner control PWA (CN4) and the main PWA (CN8) is disconnected.
6. Check if each connector pin is removed or the harness is broken.
7. Check if any conductor pattern on the RADF, scanner control and main PWA is open- or short-circuited.
8. Replace the read sensor.
9. Replace the RADF PWA.
10. Replace the scanner control PWA.
11. Replace the main PWA.

C83 **Original length sensor adjustment error**

1. Check there are any foreign obstacles between the original length sensor and the reflection mirror.
2. Check if the original sensor or reflection mirror is dirty.
3. Check if each connector between the original length sensor and the RADF PWA (CN3) is disconnected.
4. Check if each connector between the RADF PWA and the scanner control PWA (CN6) is disconnected.
5. Check if each connector between the scanner control PWA (CN4) and the main PWA (CN8) is disconnected.
6. Check if each connector pin is removed or the harness is broken.
7. Check if any conductor pattern on the RADF, scanner control and main PWA is open- or short-circuited.
8. Replace the original length sensor.
9. Replace the RADF PWA.
10. Replace the scanner control PWA.
11. Replace the main PWA.

4.1.15 Other abnormal service call

C91 **SRAM abnormality**

1. Turn the main switch OFF. Perform the RAM clear ([1] [3] [*] + ON).
2. If C91 appears again after the RAM clear, go to step 3.
3. Confirm that the J1 short pin on the main PWA is inserted properly into the pin 1 side.
4. When the power is off, check that the voltage of the lithium battery (SY1) is 2.4V or more.
5. When the power is off, check that the SRAM backup voltage is 2.0V or more.
   (Between IC58 or pin 14 (GND) of IC74 and pin 28 (+5VB))
6. Replace the lithium battery (SY1).
7. Replace the main PWA.

C95 **Power supply unit fan motor abnormality**

1. Check if each connector between the power supply unit fan motor and the relay PWA (CN50) is disconnected.
2. Check if each connector between the relay PWA (CN21) and the main PWA (CN15) is disconnected.
3. Check if each connector pin is removed or the harness is broken.
4. Check if any conductor pattern on the relay and main PWA is open- or short-circuited.
5. Replace the power supply unit fan motor.
6. Replace the relay PWA.
7. Replace the main PWA.

C96 **Process unit fan motor abnormality**

1. Check if each connector between the process unit fan motor and the relay PWA (CN50) is disconnected.
2. Check if each connector between the relay PWA (CN21) and the main PWA (CN15) is disconnected.
3. Check if each connector pin is removed or the harness is broken.
4. Check if any conductor pattern on the relay and main PWA is open- or short-circuited.
5. Replace the process unit fan motor.
6. Replace the relay PWA.
7. Replace the main PWA.

C97 **Vacuum fan motor abnormality**

1. Check if each connector between the paper guide assembly and the relay PWA (CN34) is disconnected.
2. Check if each connector between the relay PWA (CN21) and the main PWA (CN15) is disconnected.
3. Check if each connector pin is removed or the harness is broken.
4. Check if any conductor pattern on the relay and main PWA is open- or short-circuited.
5. Replace the paper guide assembly.
6. Replace the relay PWA.
7. Replace the main PWA.

C98 **Clock IC abnormality**

Is the service call generated even if the switch of the body is turned off and on again?

NO → Be left as it is for a while.

YES ↓

1. Check if any conductor pattern on the main PWA (IC75 and surrounding area) is open- or short-circuited.
2. Replace the main PWA if the problem seems to happen frequently.

C99 **PFC microcomputer abnormality**

Is the service call generated even if the switch of the body is turned on again?

NO → Be left as it is for a while.

YES ↓

1. Check if any conductor pattern on the PFC PWA is open- or short-circuited.
2. Replace the PFC microcomputer or the PFC PWA if it seems to happen frequently.

4.1.16 Laser optical system service call

CA1 **Polygon motor abnormality**

1. Check if each connector between the laser scanner unit and the relay PWA (CN26) is disconnected.
2. Check if each connector pin is removed or the harness is broken.
3. Check if any conductor pattern on the relay and main PWA is open- or short-circuited.
4. Replace the relay PWA.
5. Replace the main PWA.
6. Replace the laser scanner unit.

CA2 **HSYNC abnormality**

1. Check if each connector between the laser scanner unit and the main PWA (CN18) is disconnected.
2. Check if each connector pin is removed or the harness is broken.
3. Check if any conductor pattern on main PWA is open- or short-circuited.
4. Replace the main PWA.
5. Replace the laser scanner unit.

4.1.17 Finisher related service call

CB2 **Delivery motor is abnormal**

Rotate the delivery motor by hand. Does it rotates smoothly?

NO → Correct the mechanism.

YES ↓

Is the delivery motor clock sensor working normally?

NO → Replace the sensor.

YES ↓

Is the voltage between J4 -5 and -6 on the finisher controller PWA 24V when the delivery motor is rotating?

NO → Replace the finisher controller PWA.

YES ↓

Is the harness connecting the motor and the controller PWA open- or short-circuited?

YES → Replace the harness.

NO ↓

Replace the motor.

CB5 **Staple motor is abnormal**

Is the harness connecting the stapler and the finisher controller PWA open- or short-circuited?

YES → Replace the harness.

NO ↓

Is the problem solved by replacing the stapler?

NO → Replace the finisher controller PWA.

YES ↓

END

CC8 **Front jogging motor is abnormal**

Is the front jogging plate home position sensor working properly?

NO → Replace the sensor.

YES ↓

Is the wiring between the finisher controller PWA and front jogging motor correct?

NO → Correct the wiring.

YES ↓

Has the rack run over the stopper of the roll?

YES → Fix it.

NO ↓

Is the problem solved by replacing the front jogging motor?

NO → Replace the finisher controller PWA.

YES ↓

END

CC9 **Upper stack tray lift motor is abnormal**

Is the wiring between the finisher controller PWA and upper stack tray lift motor correct?

NO → Correct the wiring.

YES ↓

Are the front and rear sides of the upper stack tray leveled?

NO → Level them.

YES ↓

Is the upper stack tray lift motor clock sensor working properly?

NO → Replace the sensor.

YES ↓

Is the stack tray paper height sensor working properly?

NO → Replace the sensor.

YES ↓

Are the upper stack tray upper limit sensor and lower stack tray full sensor working properly?

NO → Replace the sensor or sensor controller PWA.

YES ↓

Does the voltage between the pins J14-1 and -2 on the finisher control PWA 24V when the upper stack tray lift motor starts rotating?

NO → Replace the finisher controller PWA.

YES ↓

Check the wiring between the upper stack tray lift motor and finisher controller PWA. If there is no problem, replace the upper stack tray lift motor.

CCA **Lower stack tray lift motor is abnormal**

Is the wiring between the finisher controller PWA and lower stack tray lift motor correct?

NO → Correct the wiring.

YES ↓

Are the front and rear sides of the lower stack tray leveled?

NO → Level them.

YES ↓

Is the lower stack tray lift motor clock sensor working properly?

NO → Replace the sensor.

YES ↓

Is the stack tray paper height sensor working properly.

NO → Replace the sensor.

YES ↓

Are the lower stack tray upper limit sensor and lower stack tray lower limit sensor working properly?

NO → Replace the sensor or sensor controller PWA.

YES ↓

Does the voltage between the pins J3-1 and -2 on the finisher controller PWA become 24V when the lower stack tray lift motor starts rotating?

NO → Replace the finisher controller PWA.

YES ↓

Check the wiring between the upper stack lift motor and finisher controller PWA. If there is no problem, replace the lower stack tray lift motor.

CCB **Rear jogging motor is abnormal**

Is the rear jogging plate home position sensor working properly?

NO → Replace the sensor.

YES ↓

Is the wiring between the finisher controller PWA and rear jogging motor correct?

NO → Correct the wiring.

YES ↓

Has the rack run over the stopper of the roll?

YES → Fix it.

NO ↓

Is the problem solved by replacing the rear jogging motor?

NO → Replace the finisher controller PWA.

YES ↓

END

4.1.18 Scanner related service call

F11 **Scanner I/F error**

1. Check if each connector between the scanner control PWA (CN6) and the main PWA (CN8) is disconnected.
2. Check if each connector pin is removed or the harness is broken.
3. Check if any conductor pattern on the scanner control and main PWA is open- or short-circuited.
4. Replace the scanner control PWA.
5. Replace the main PWA.

F12 **Scanner unit program download write error**

F13 **Scanner unit program download sector error**

1. Check if the recovery ROM PWA is firmly connected to the scanner control PWA (CN3).
2. Check if the connector pin is removed.
3. Check if any conductor pattern on the scanner control PWA is open- or short-circuited.
4. Replace the scanner control PWA.

F14 **Scanner unit FROM error**

Was the main PWA replaced?

YES → Download the scanner total count value into the main PWA in the setting mode (08-388).

NO ↓

Was the scanner unit or scanner control PWA replaced?

YES → Download the scanner total counter value of the main PWA into the scanner control PWA in the setting mode (08-389).

NO ↓

1. Check if each connector between the scanner control PWA (CN6) and the main PWA (CN8) is disconnected.
2. Check if each connector pin is removed or the harness is broken.
3. Check if any conductor pattern on the scanner control and main PWA is open- or short-circuited.
4. Replace the scanner control PWA.
5. Replace the main PWA.

4.1.19 Printer related service call

F21 **Printer PWA memory error**

1. Check if the printer PWA is firmly connected to the main PWA (CN5).
2. Check if the connector pin is removed.
3. Check if any conductor pattern on the main PWA is open- or short-circuited.
4. Replace the main PWA

F22 **Printer PWA NV-RAM error**

Replace the Printer PWA.

4.1.20 Fax related service call

F31 **Modem IC abnormality**

1. Check if the Fax PWA is firmly connected to the main PWA (CN6).
2. Check if the connector pin is removed.
3. Check if any conductor pattern on the Fax and main PWA is open- or short-circuited.
4. Replace the Fax PWA.
5. Replace the main PWA

4.1.21 OCT system service call

F41 **Initial detection error of the offset tray**

1. Check if each connector between the OCT motor and the OCT PWA (CN261) is disconnected.
2. Check if each connector between the OCT PWA (CN261) and the relay PWA (CN41) is disconnected.
3. Check if each connector pin is removed or the harness is broken.
4. Check if any conductor pattern on the OCT, relay and main PWA is open- or short-circuited.
5. Replace the OCT motor.
6. Replace the OCT PWA.
7. Replace the relay PWA.
8. Replace the main PWA.

4.1.22 Other service call

Error message "Set process unit" is re-displayed

1. Check if each connector between the relay PWA (CN54) and the DEV. motor assembly (terminals) is disconnected.
2. Check if the harnesses have been connected to the designated terminals of DEV. motor assembly correctly. (Refer to Chapter 12.6 of the Service Manual)
3. Check if each connector pin is removed or the harness is broken.
4. Replace the relay PWA.
5. Replace the main PWA.

Error message "Broken Registration" is re-displayed

This error occurs when an error is found on the phonebook data stored in the flash ROM (IC50) on the main PWB or the machine is failed to read the phonebook data correctly.

1. Turn the main switch OFF. Perform the RAM clear ([1] [3] [*] + ON).

   Warning: Before performing the RAM clear, press the [CLEAR/STOP] key to clear the error and print out the TELEPHONE NUMBER LIST, FUNCTION LIST, and FUNCTION LIST FOR MAINTENANCE.
2. Set the functions and program the dial numbers according to the list printed out.
3. If the error persists, replace the main PWA.

4.2 Troubleshooting of Image

(1) Uneven pitch and blur

<Symptoms>

Condition	Location	Phenomenon
All modes	Occurs cyclically at right angles to paper feeding direction	Uneven pitch

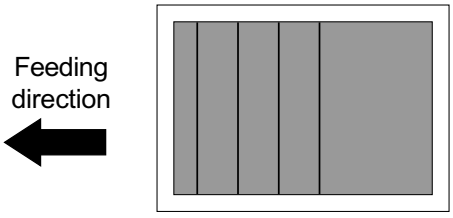

Defect area	Step	Cause		
		Main-Classification	Sub-Classification	Specific-Classification
—	1	—	—	—
Abnormal paper transport speed	2	Paper transport speed in registration section	Low speed	Registration roller aging change
			Low speed	Registration roller life worn out
Drum drive system	3	Drum	Surface condition	—
				Damage
				Attached foreign matter
	4	Main drive gear assembly	Installation condition	—
		Drum Drive Gear	Damaged	—
			Deformation	—
Laser scanner unit	5	Polygonal mirror	Surface inclined	Deformation

	Check item	Criteria	Measures
	Output built-in halftone pattern on A3/LD. (Code 109)	Perform following procedures from 2 and after.	—
	—	—	Clean rubber roller. Surface with alcohol or replace it with new one.
	Check condition of registration rubber roller surface.	Does the roller surface lack in friction and is it slippery?	Replace registration roller.
	Check pattern.	Uneven pitch approx. 94 mm overall?	—
	Check drum surface.	Is there damage?	Replace process unit or drum.
	Check drum surface.	Is there any attached foreign matter?	Clean drum, replace process unit or drum.
	Check pattern.	Uneven pitch approx. 2.4 mm overall?	Reinstall main drive gear assembly properly.
	Check pattern.	—	Replace drum drive gear.
	Check pattern.	—	Replace drum drive gear.
	Check pattern.	Uneven pitch approx. 0.3 mm overall?	Replace unit.

(2) Blurred image

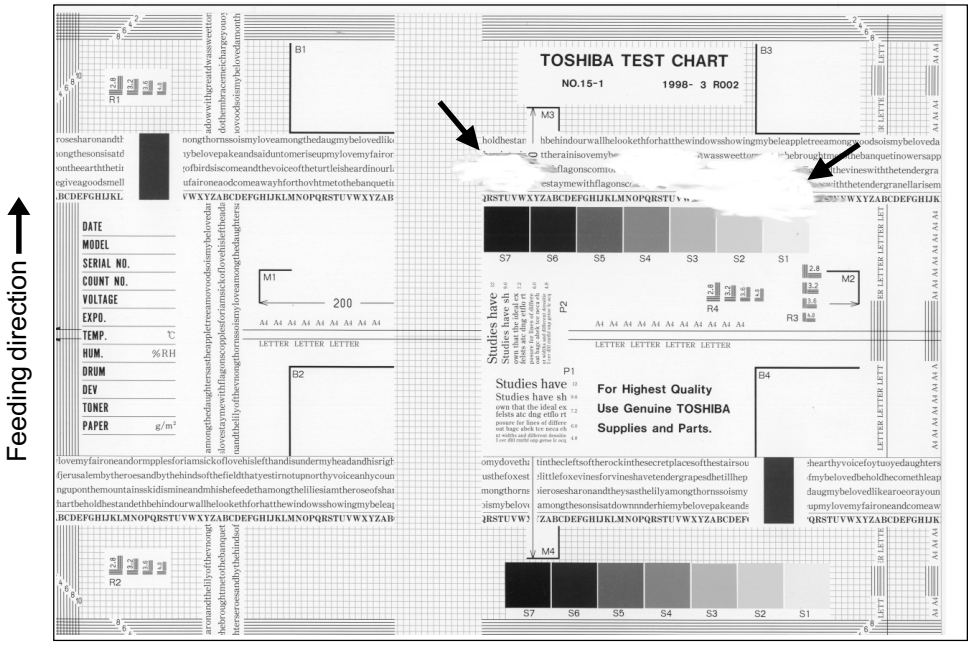

Step	Cause/Defect area	Check items	Measures
1	Paper	Paper in cassette or LCF damp?	Change paper. Avoid storing paper in damp place.
2	Machine installation place	Is machine installed on a slant surface?	Place machine on flat surface.
3	Process unit (developer)	Is toner running short?	Replace toner cartridge. Check to see that toner empty sensor and empty detection circuit operate properly.
4	Transfer charger unit	Transfer charger wire dirty?	Clean transfer charger wire.
5		Transfer charger wire slacked?	Replace transfer charger unit.
6		Foreign matter such as dust sticking to transfer guide roller?	Clean transfer guide roller.
7	Process unit (drum)	Drum bedewed or dirty?	If problem persists, replace process unit or drum. **Note:** Never touch drum surface.
8	Laser scanner unit	Foreign matter or dust on lens?	Remove foreign matter or dust with blower. (Do not use a cloth.)
9		If problem persists after measures are applied, or there is no problem found the above check, follow procedure described in right column.	Replace the process unit, transfer unit, or laser scanner unit.

(3) Blank copy

Step	Cause/Defect area	Check items	Measures
1	Transfer charger unit	Transfer charger unit securely installed?	Re-install transfer charger unit securely.
2		Transfer charger wire cut off?	Replace transfer charger unit.
3	Process unit (terminals)	Drum ground terminals/developing bias terminals and corresponding terminals of main body stained?	Clean drum ground terminals, developing bias terminals and corresponding terminals of main body.
4	Process unit drive system	Is sleeve gear and agitator gear driven when main motor is manually rotated clockwise?	If any is damaged, replace process unit or damaged part.
5		Is drum coupling driven when main motor is manually rotated clockwise?	If any is damaged, replace process unit or damaged part.
6	Process unit deformation	Process unit deformed?	Replace process unit.
7	Laser scanner unit	Foreign matter or stain on lens?	Remove foreign material or stain with blower. (Do not use a cloth.)
8	HVPS (transfer charger and developer bias)	High-voltage output defective?	Adjust output from HVPS, or replace defective HVPS.
9		If problem persists after measures are applied, or there is no problem found in above check, follow procedure described in right column.	Replace process unit, laser scanner unit, HVPS or main PWA.

(4) Solid copy

Step	Cause/Defect area	Check items	Measures
1	Process unit installation	Process unit securely installed?	Re-install process unit securely.
2	Process unit (main charger)	Charger wire terminals/grid terminals (process unit) and corresponding terminals (main body) stained?	Clean terminals.
3		Is there any disconnection in the charger wire?	Replace the process unit or charger wire.
4	HVPS (main charger)	High-voltage output defective?	Adjust output from HVPS, or replace defective HVPS.
5		If problem persists after measures are applied, or there is no problem found in above check, follow procedure described in right column.	Replace the process unit, laser scanner unit, HVPS, or main PWA.

(5) White banding (in feeding direction)

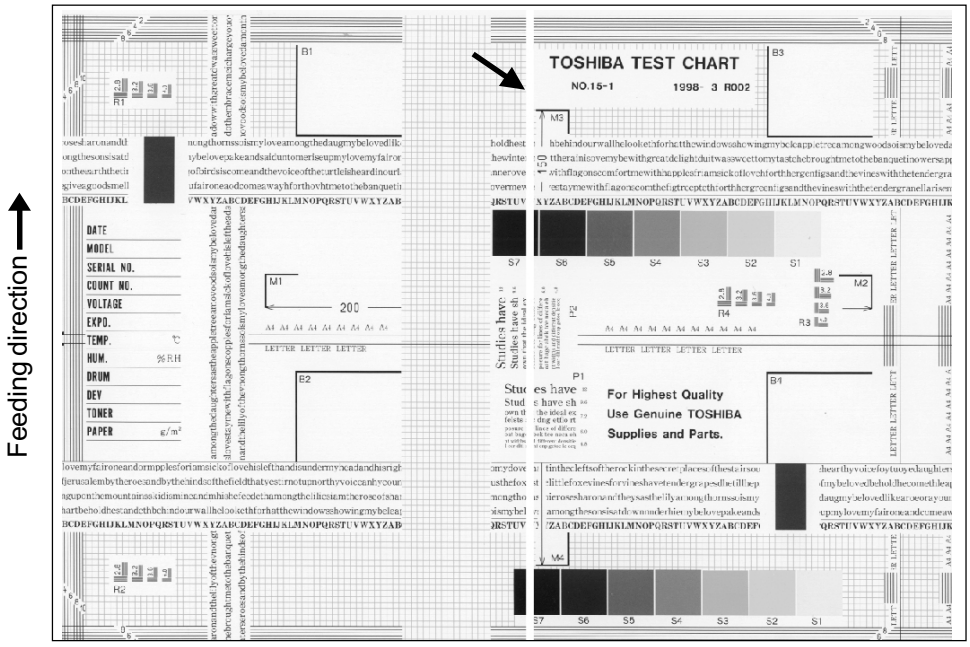

Step	Cause/Defect area	Check items	Measures
1	Paper feed path	Does toner image touch foreign matter after separation, before entering fuser unit.	Remove the foreign matter.
2	Laser scanner unit	Foreign matter or dust on lens?	Remove the foreign matter or dust with blower. (Do not use a cloth.)
3		Is there a foreign matter blocking off laser beam in the path?	Remove the foreign matter.
4	Transfer charger unit	Does a foreign material or stain adhere to the transfer wire?	Clean the wire, or remove the foreign matter.
5		Transfer charger wire slacked?	Replace the transfer charger unit.
6		Transfer charger case deformed?	Replace the transfer charger unit.
7	Process unit (Magnetic roller)	White banding on the magnetic roller? (Is there a foreign matter between the magnetic roller and doctor blade?)	Clean the area between the magnetic roller and doctor blade with the doctor blade cleaning jig.
8	Process unit (Doctor blade)	Is the doctor-sleeve gap within the specified value?	Adjust the doctor-sleeve gap. If the problem persists, replace the doctor blade.
9	Process unit (Drum)	Any abnormalities on drum surface?	If the problem persists, replace process unit or drum. **Note:** Never touch drum surface.
10		If problem persists after measures are applied, or there is no problem found in above check, follow procedure described in the right column.	Replace the process unit, laser scanner unit, or transfer charger unit.

(6) White banding (at right angles to feeding direction)

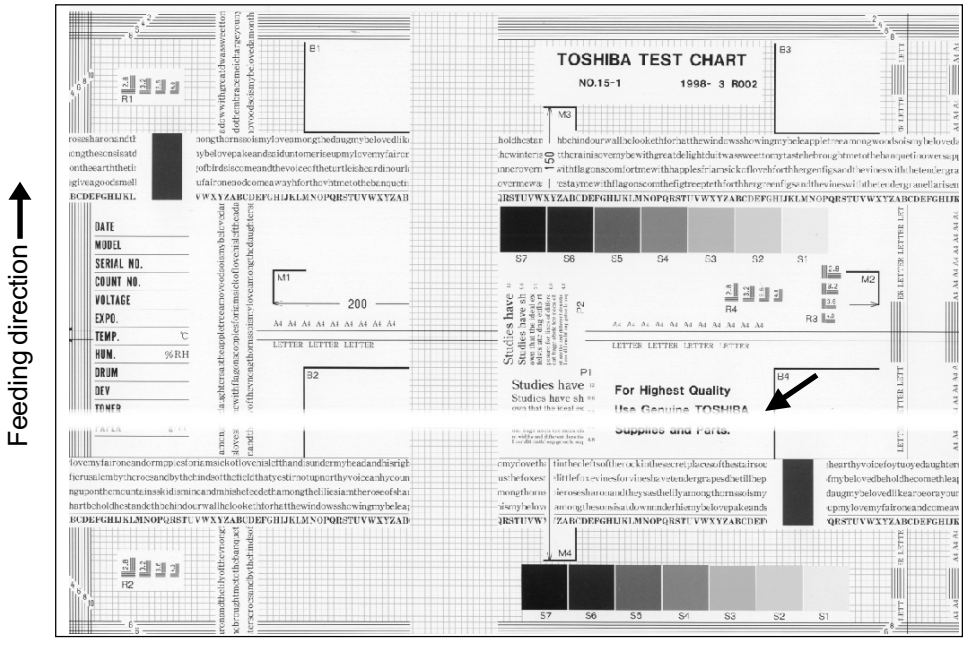

Step	Cause/Defect area	Check items	Measures
1	Process unit (developer)	Developing bias terminals (process unit) and corresponding terminals (main body) stained?	Clean terminals.
2	Transfer charger unit	Transfer charger unit securely installed?	Re-install transfer charger unit securely.
3		Transfer charger wire terminals and corresponding terminals stained?	Clean terminals.
4		Is guide roller stained or rotating improperly? Guide roller stained or rotating improperly? Guide roller shaft grouded improperly?	Clean guide roller. Ground shaft properly. When guide roller rotates improperly, replace transfer charger unit.
5	Process unit (drum)	Any abnormalities on drum surface?	Replace process unit or drum.
6	Fuser unit	Toner on heat roller surface? Scratches on heat roller surface?	Clean heat roller. If problem persists, replace heat roller.
7	Gear and roller	Check each gear or roller for paper feed and transport is damaged?	Replace defective gear or roller.
8	HVPS (main charger, transfer charger and developer bias)	High-voltage output defective?	Adjust output from HVPS, or replace defective HVPS.
9		If problem persists after measures are applied, or there is no problem found in above check, follow procedure described in right column.	Replace process unit or transfer charger unit.

(7) Black banding (in feeding direction)

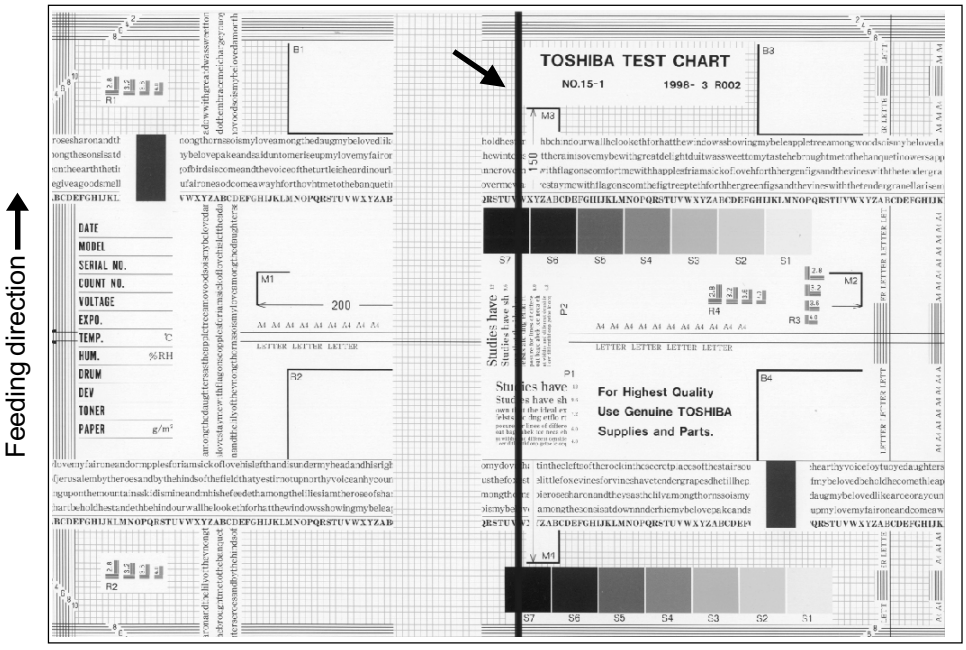

Step	Cause/Defect area	Check items	Measures
1	Scanner	Foreign matter in optical path?	Clean slit, lens and mirrors.
2	Process unit	Main charger wire stained?	Clean charger wire.
3	(main charger)	Foreign matter on grid?	Remove foreign matter.
4		Grid dirty or deformed?	Clean grid, replace process unit or grid.
5	Process unit (Drum)	Scratches on drum surface?	Replace process unit or drum.
6	Fuser unit	Dirt or scratches on heat roller surface?	Clean or replace heat roller?
7		If problem persists after measures are applied, or there is no problem found in above check, follow procedure described in right column.	Replace process unit or fuser unit.

(8) Black banding (at right angles to feeding direction)

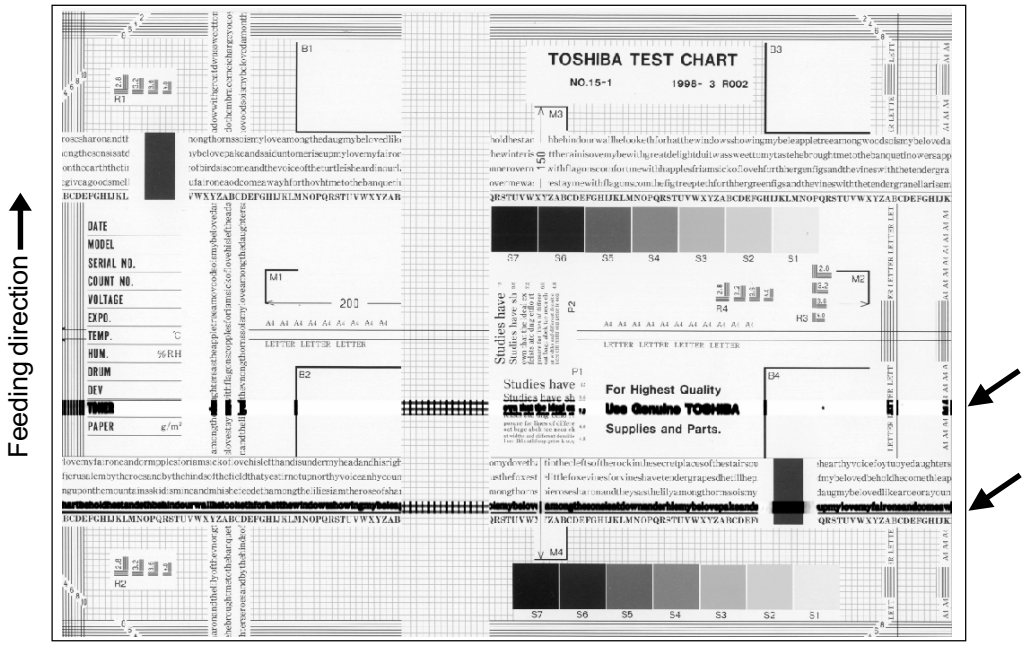

Step	Cause/Defect area	Check items	Measures
1	Process unit (main charger)	Main charger wire dirty or deformed?	Clean main charger wire, replace process unit or charger wire.
2		Charger wire terminals/grid terminals (process unit) and corresponding terminals (main body) stained?	Clean terminals.
3	Process unit (Drum)	Deep scratch on drum surface?	Replace process unit or drum.
4	Fuser unit	Dirt or scratches on heat roller surface?	Clean or replace heat roller?
5	HVPS (main charger/transfer charger)	High-voltage output defective?	Adjust output from HVPS, or replace defective HVPS.
6		If problem persists after measures are applied, or there is no problem found in above check, follow procedure described in right column.	Replace process unit or fuser unit.

(9) White Spots

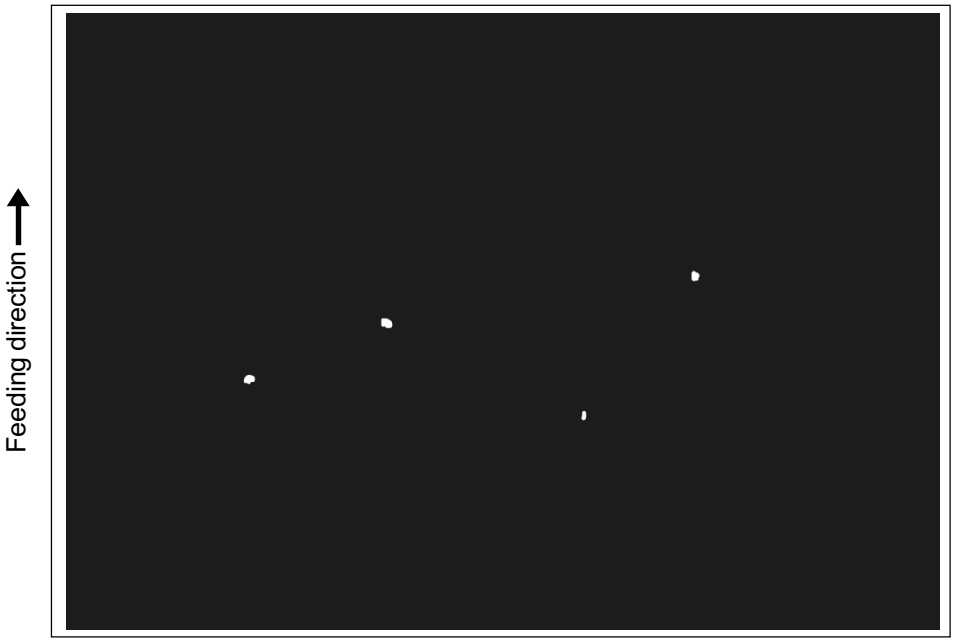

Step	Cause/Defect area	Check items	Measures
1	Transfer charger unit	Foreign matter on guide roller?	Clean guide roller.
2		Guide roller shaft grounded improperly?	Ground guide roller shaft properly by applying conductive oil.
3		Transfer charger wire slacked?	Replace transfer charger unit.
4		Transfer charger case deformed?	Replace transfer charger unit.
5	Process unit (drum)	Any abnormalities on drum surface?	Replace process unit or drum.
6	Fuser unit	Toner on heat roller surface? Scratches on heat roller surface?	Clean heat roller. If problem persists, replace heat roller.
7	Process unit (Developer)	Is toner running short?	Check to see toner sensor works properly, and then check toner replenishing procedure.
8	HVPS (main charger/ developer bias/transfer charger)	High-voltage output defective?	Adjust output from HVPS, or replace defective HVPS.
9		If problem persists after measures are applied, or there is no problem found in above check, follow procedure described in right column.	Replace process unit, transfer unit, fuser unit, or HVPS.

(10) Uneven image density

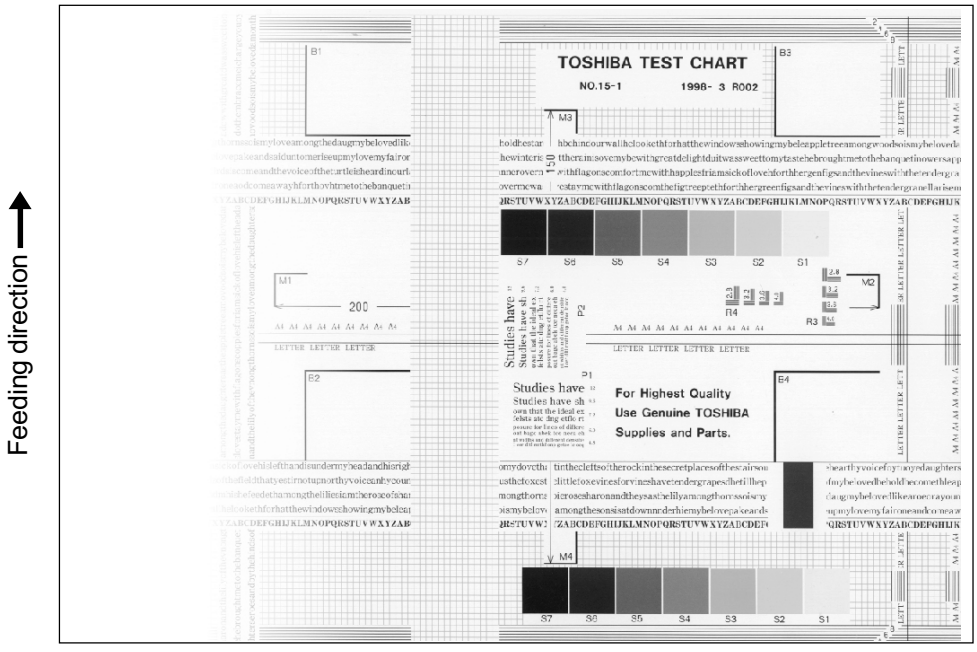

Step	Cause/Defect area	Check items	Measures
1	Paper	Paper in cassette or LCF damp?	Change paper. Avoid storing paper in damp place.
2	Laser scanner unit	Foreign matter or dust on lens?	Remove foreign matter or dust with blower. (Do not use a cloth.)
3	Process unit (main charger)	Main charger wire stained?	Clean charger wire.
4	Process unit (developer)	Is toner put in process unit in an unbalanced manner?	Shake process unit horizontally to place toner evenly.
5	Transfer charger unit	Transfer charger unit securely installed?	Re-install transfer charger unit securely.
6		Transfer charger wire dirty?	Clean transfer charger wire.
7		If problem persists after measures are applied, or there is no problem found in above check, follow procedure described in right column.	Replace process unit, transfer charger unit, or laser scanner unit.

(11) Blotched image

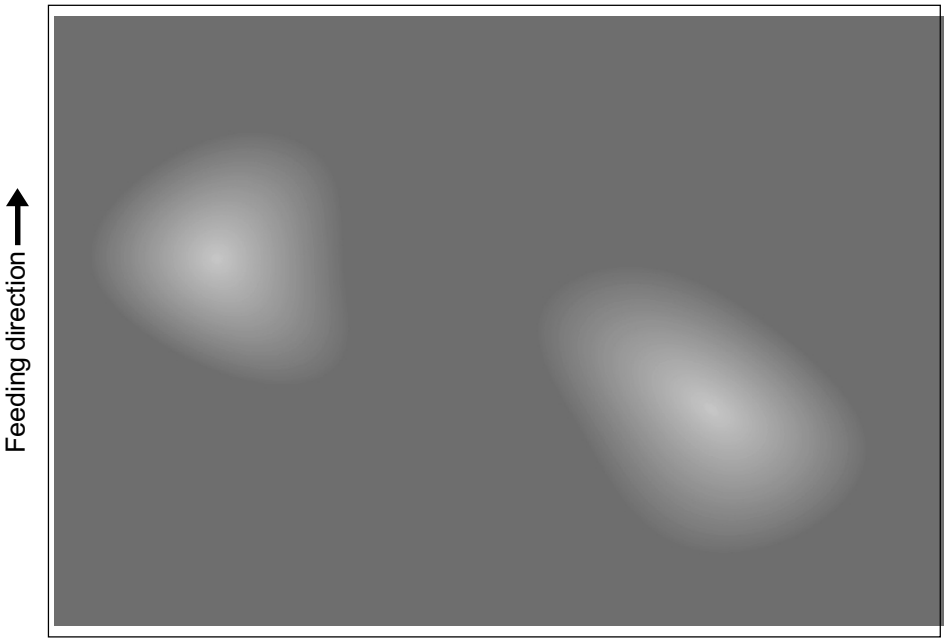

Step	Cause/Defect area	Check items	Measures
1	Paper	Paper too thin?	Change paper.
2		Paper too dry?	Change paper.
3	Transfer charger unit	Transfer charger case dirty?	Clean case.
4		Transfer charger wire dirty?	Clean wire.
5	HVPS (transfer/separation charger)	High-voltage output defective?	Adjust output from HVPS, or replace defective HVPS.
6		If problem persists after measures are applied, or there is no problem found in above check, follow procedure described in right column.	Replace process unit.

(12) Poor image transfer

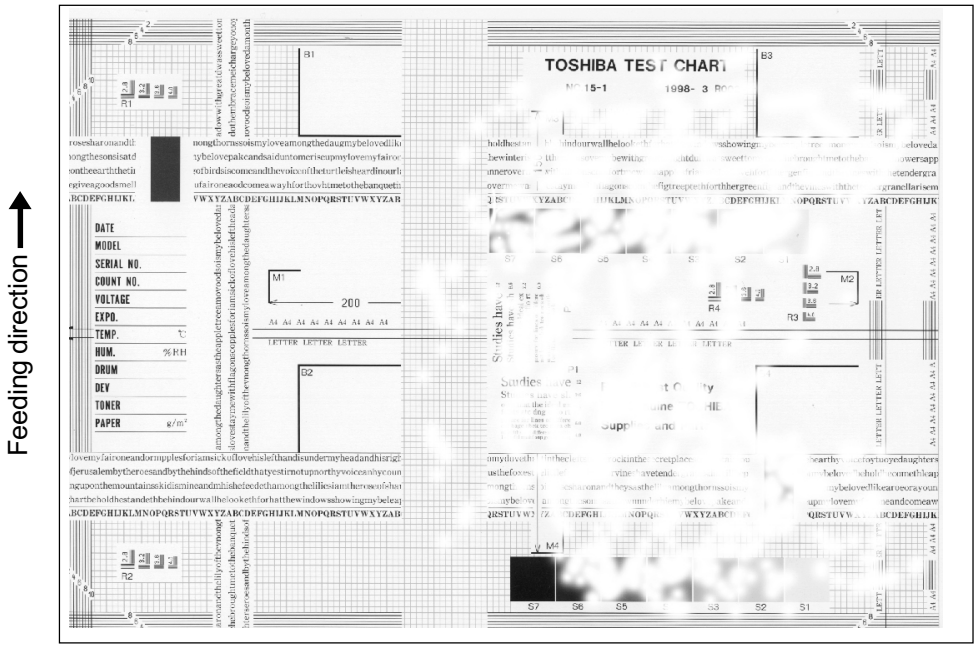

Step	Cause/Defect area	Check items	Measures
1	Paper	Paper in cassette or LCF curled?	Reinsert paper with reverse side up or change paper.
2		Paper in cassette or LCF damp?	Change paper. Avoid storing paper in damp place.
3	Transfer charger	Transfer charger case dirty?	Clean transfer charger case.
4		Transfer charger wire dirty?	Clean transfer charger wire.
5	Registration roller	Registration roller malfunctioning?	Clean roller, or replace defective clutch-related parts.
6	Pinch roller	Pinch roller spring out of place?	Re-mount or replace spring.
7	HVPS (transfer/separation charger/guide bias)	High-voltage output defective?	Adjust output from HVPS, or replace defective HVPS.
8		If problem persists after measures are applied, or there is no problem found in above check, follow procedure described in right column.	Replace process unit, laser scanner unit, or the transfer unit.

(13) Poor cleaning

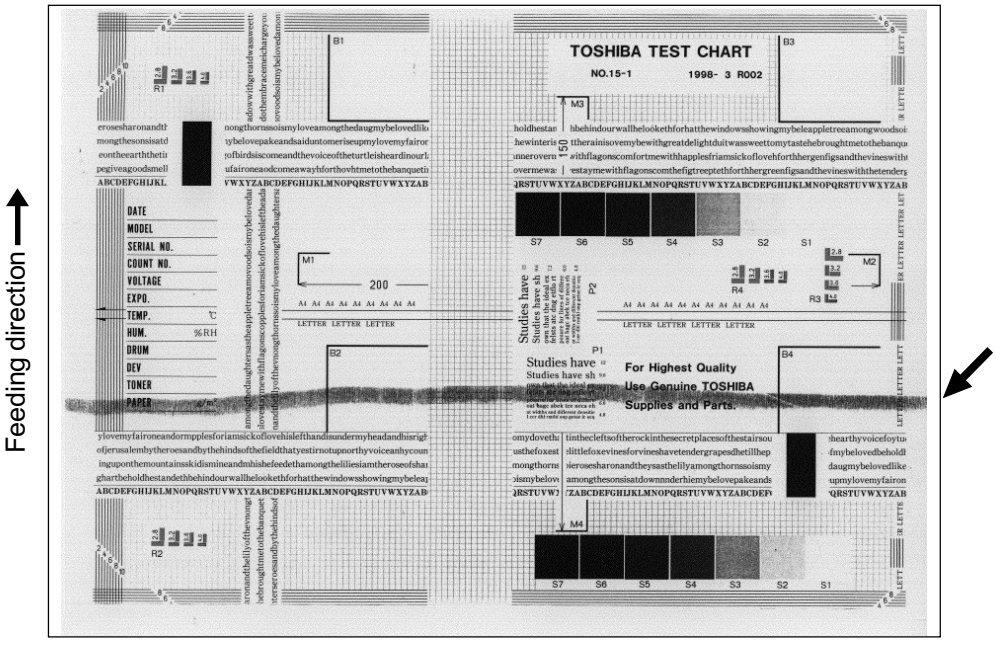

Step	Cause/Defect area	Check items	Measures
1	Process unit (drum)	Scratches on drum surface?	Replace process unit or durm.
2	Cleaning roller	Cleaning roller damaged or their life ended?	Replace cleaning roller.
3	Heat roller	Bubbles on heat roller (94 mm pitch on copy)?	Replace heat roller. Check and fix heater control circuit.
4		Heat roller life ended?	Replace heat roller.
5		If problem persists after measures are applied, or there is no problem found in above check, follow procedure described in right column.	Replace the process unit or the fuser unit.

(14) Faded image (low density, abnormal gray balance)

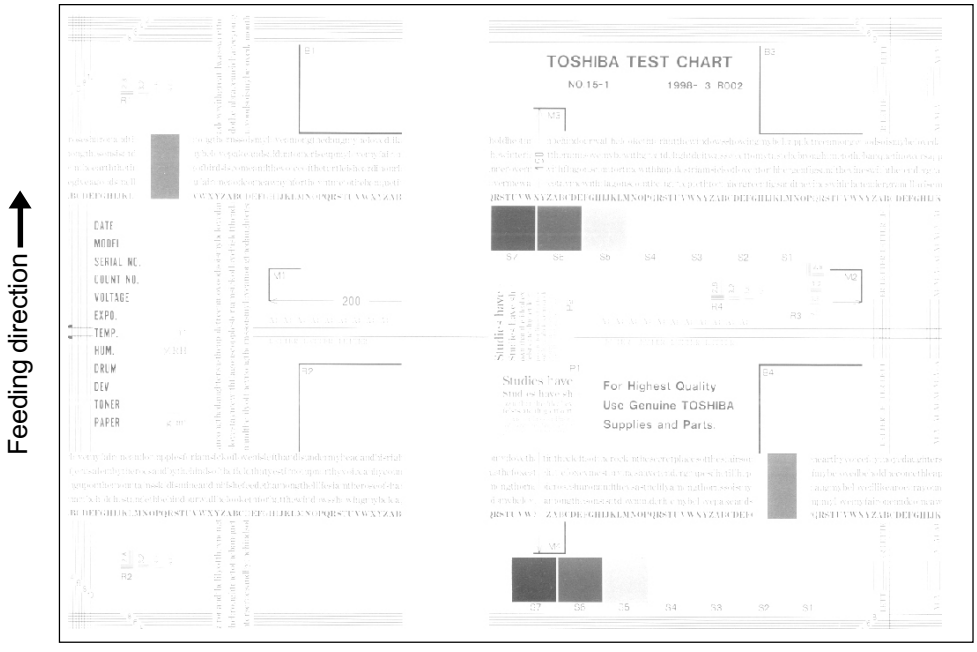

Step	Cause/Defect area	Check items	Measures
1	Toner empty	"ADD TONER" symbol flashing?	Replace toner cartridge.
2	Transfer charger unit	Transfer charger unit securely installed?	Re-install transfer charger unit securely.
3		Transfer charger wire cut off?	Replace transfer charger unit.
4	Process unit drive system	Is auger gear of process unit driven when the PU pulley is manually rotated clock wise?	Replace process unit.
5	Toner cartridge	Any abnormalities in toner cartridge?	Replace toner cartridge.
6	Process unit (developer)	Magnetic roller pressure mechanism working normally?	Check mechanism.
7	Process unit (main charger)	Main charger dirty?	Clean main charger wire, replace process unit or charger wire.
8	Process unit (drum)	Film formed on drum surface?	If problem persists, replace process unit or drum. **Note:** Never touch drum surface.
9	DEV. motor assembly (terminal)	Have harnesses been connected to designated terminals of DEV. motor assembly correctly? (Refer to chapter 12.6 of Service Manual.)	Re-install the harness.
10	HVPS	High-voltage output defective?	Adjust output from HVPS, or replace defective HVPS.
11		If problem persists after measures are applied, or there is no problem found in above check, follow procedure described in right column.	Replace process unit or transfer charger unit.

(15) Background Fogging

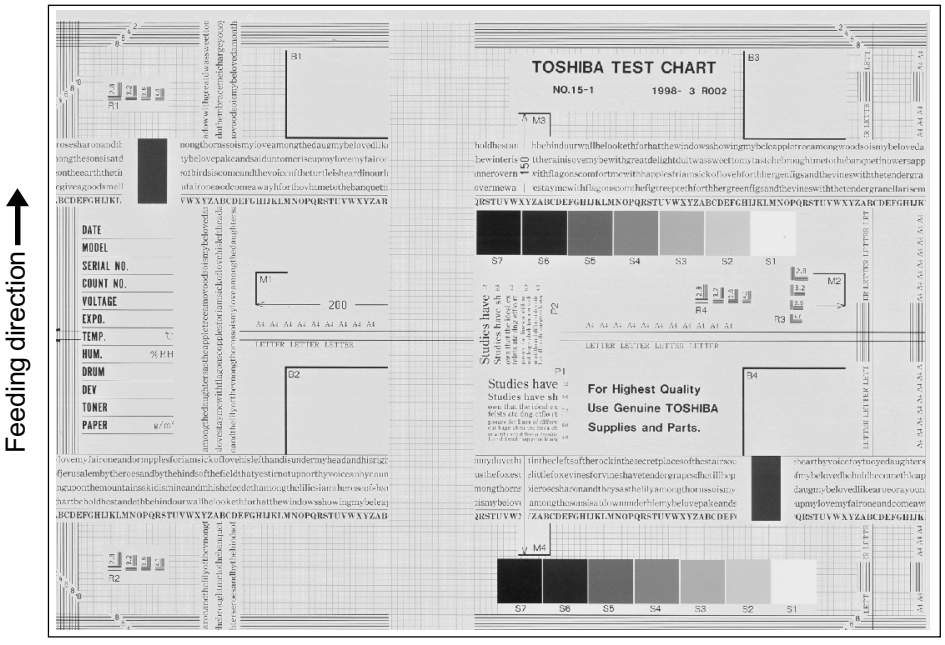

Step	Cause/Defect area	Check items	Measures
1	Density reproduction	Image density reproduction defect?	Adjust density.
2	Main charger	Main charger dirty?	Clean main charger wire, replace process unit or charger wire.
3	Process unit (developer)	Magnetic roller pressure mechanism working normally?	Check mechanism.
4	Process unit (drum)	Film formed on drum surface?	If problem persists, replace process unit or drum. **Note:** Never touch drum surface.
5	HVPS (main charger/ developer bias/ transfer charger	High-voltage output defective?	Adjust output from HVPS, or replace defective HVPS.
6		If problem persists after measures are applied, or there is no problem found in above check, follow procedure described in right column.	Replace process unit.

(16) Toner offset

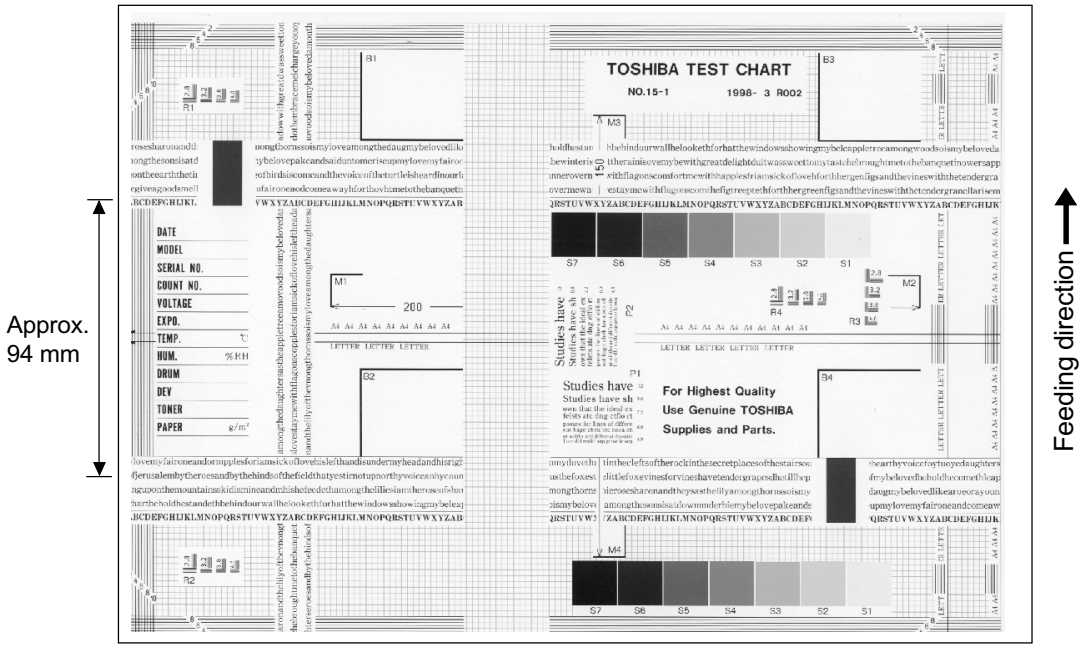

Step	Cause/Defect area	Check items	Measures
1	Density	Density too high?	Adjust density.
2	Paper	Recommended paper used?	Use recommended paper.
3	Fuser	Fuser unit ground place damaged?	Replace ground plate.
4		Scratch on heat roller surface?	Replace heat roller.
5		Heat roller life ended?	Replace heat roller.
6		Heat roller temperature proper?	Check heater control circuit.
7		If problem persists after measures are applied, or there is no problem found in above check, follow procedure described in right column.	Replace process unit or heat roller.

(17) Poor fusing

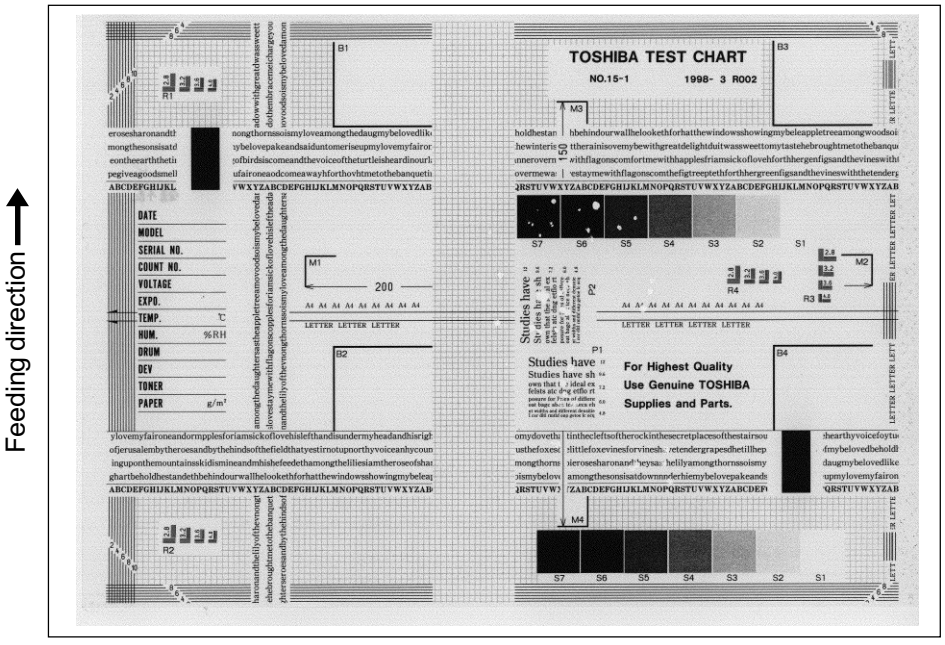

Step	Cause/Defect area	Check items	Measures
1	Paper	Paper dump?	Change paper.
2	Fuser unit	Pressure springs working normally?	Check mechanism.
3		Heat roller temperature too low?	Check heater control circuit.
4		If problem persists after measures are applied, or there is no problem fund in the above check, follow procedure described in right column.	Replace process unit or fuser unit.

(18) Defect of image density/Gray balance

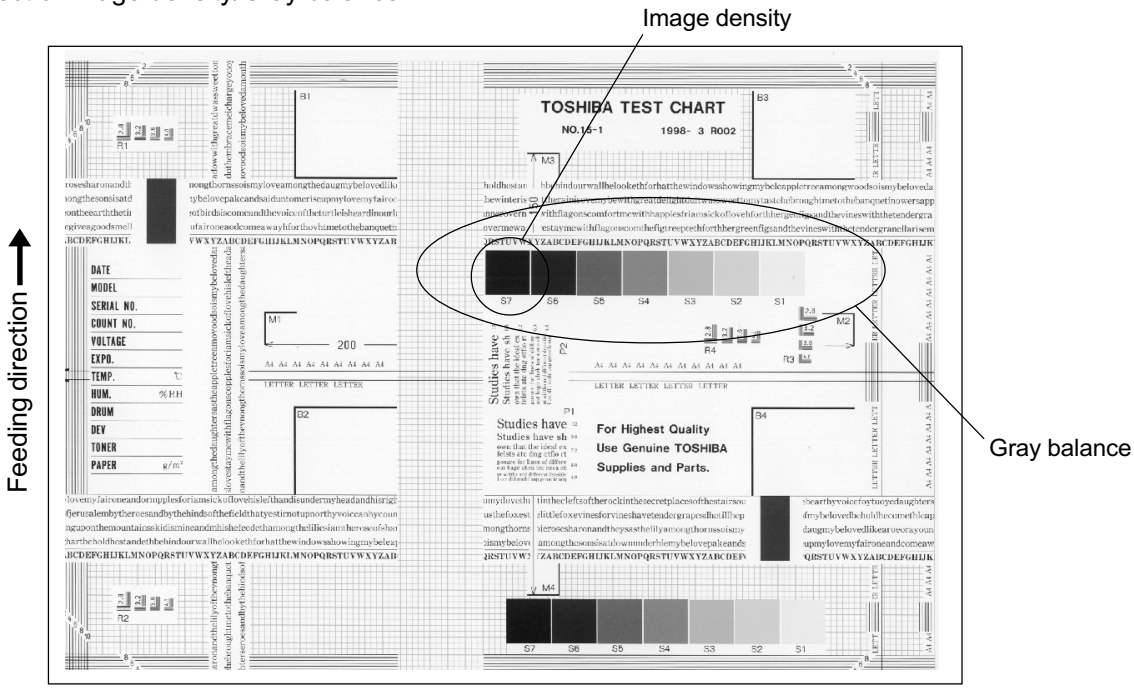

Step	Cause/Defect area	Check items	Measures
1	Density/Gray balance	Check density/gray balance.	Adjust density.
2	Printer section	Check test print image (Code 113).	Go to step 4 if there is any problem on image.
3	Scanner	Original glass, mirrors or lens filter dirty?	Clean them.
4	Printed image	Is there any faded image (low density)?	Perform troubleshooting for faded image.
		Is there any fog in background?	Perform troubleshooting for background fogging.
		Is there any botch image?	Perform troubleshooting for blotch image.
		Is there any transfer defect?	Perform troubleshooting for poor fusing.

(19) Moire/lack of sharpness

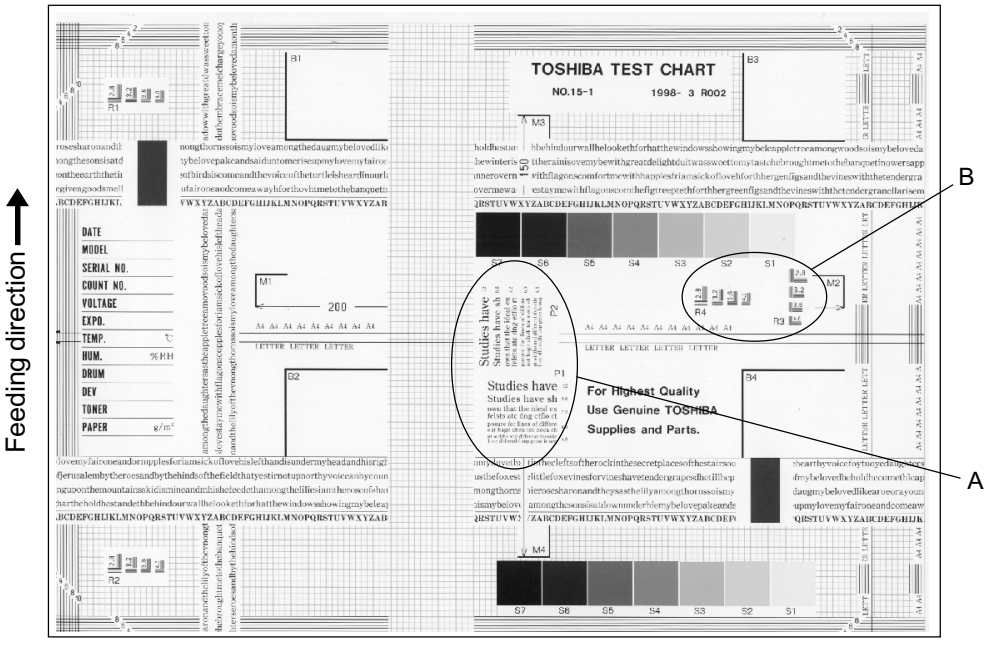

Moire

Step	Cause/Defect area	Check items	Measures
1	Density reproduction	Image density reproduction defect?	Adjust density.
2	Parameter adjustment value	Check image processing parameters.	Check adjustment value for sharpness.

Lack of sharpness

Step	Cause/Defect area	Check items	Measures
1	Density reproduction	Image density reproduction defect?	Adjust density.
2	Parameter adjustment value	Check image processing parameters.	Check adjustment value for sharpness.
3	Print section	Adjust image processing parameters.	Check the above encircled area A and B, and change the sharpness intensity in the sharpness adjustment mode.

(20) Uneven light distribution

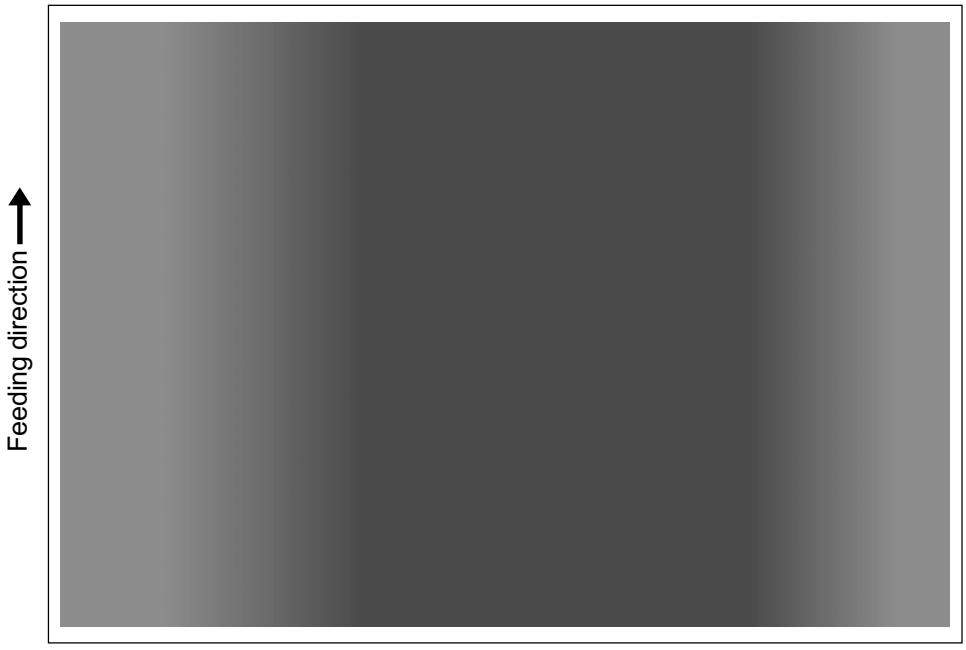

Step	Cause/Defect area	Check items	Measures
1	Original glass	Original glass dirty?	Clean glass.
2	Process unit (main charger)	Main charger wire dirty?	Clean main charger wire, replace process unit or charger wire.
3	Laser scanner unit	Foreign matter or dust on lens?	Remove foreign matter or dust with blower. (Do not use a cloth)

(21) Skew (inclined image)

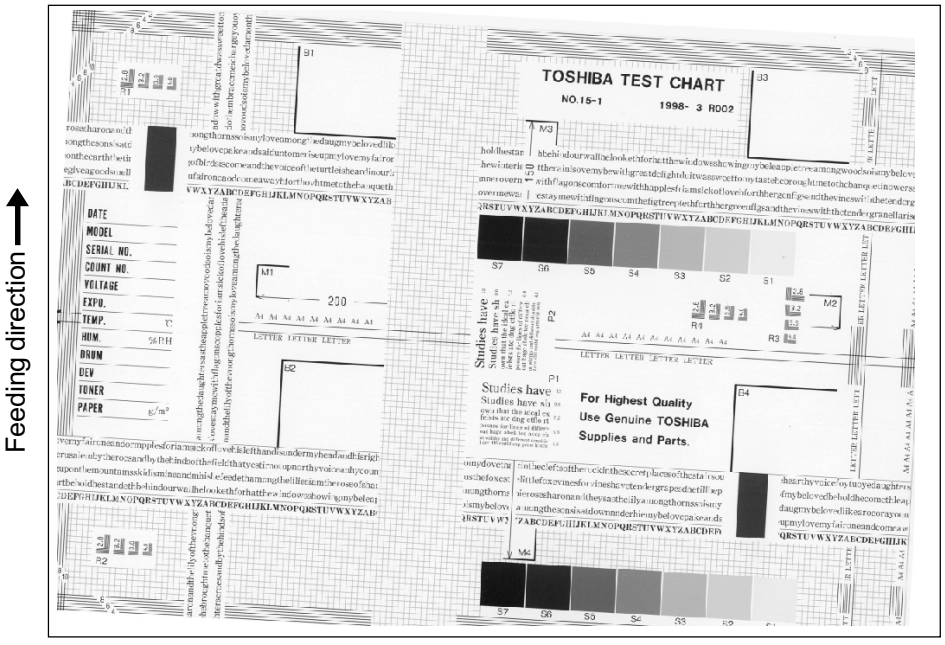

Moire

Step	Cause/Defect area	Check items	Measures
1	Cassette/LCF	Cassette or LCF properly installed?	Re-install cassette or LCF properly.
2		Too much paper loaded in cassette or LCF?	Reduce paper to 550 sheets or less. (1250 sheets each or less for LCF.)
3		Paper in cassette or LCF curled?	Reinsert paper with reverse side up or change paper.
4		Cassette or LCF side guides properly installed?	Adjust side guide.
5	Paper feed roller	Paper feed roller dirty?	Clean roller surface with alcohol, or replace roller.
6	Registration roller	Registration roller dirty?	Clean roller surface with alcohol, or replace roller.
7	Pinch roller	Pinch roller spring out of place?	Re-mount or replace spring.
8	Paper guide	Paper guide improperly mounted?	Re-install paper guide securely.
9	Original scale	Original scale slanted?	Adjust original scale.
10	Carriage 1	Carriage 1 slanted?	Adjust carriage 1

(22) Image dislocation in feeding direction

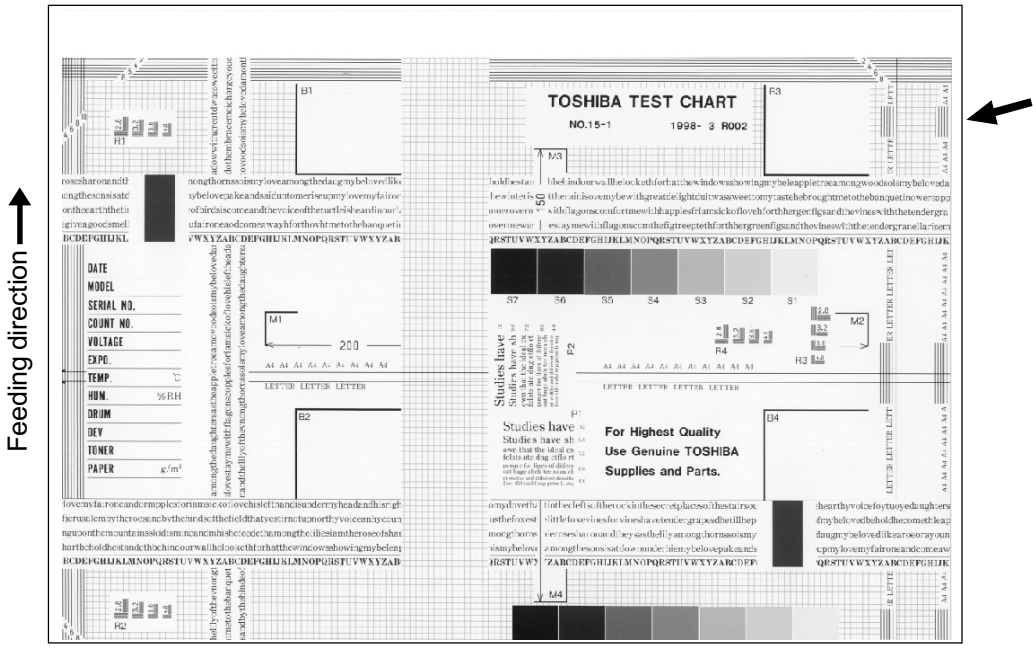

Step	Cause/Defect area	Check items	Measures
1	Registration roller	Registration roller dirty?	Clean roller surface with alcohol, or replace roller.
2	Pinch roller	Pinch roller spring out of place?	Re-mount or replace spring.
3	Paper guide	Paper guide improperly mounted?	Re-install paper guide.
4	Scanner/printer adjustment defect	Same dislocation on every copy?	Adjust scanner/printer using adjustment mode.

(23) Jittering image

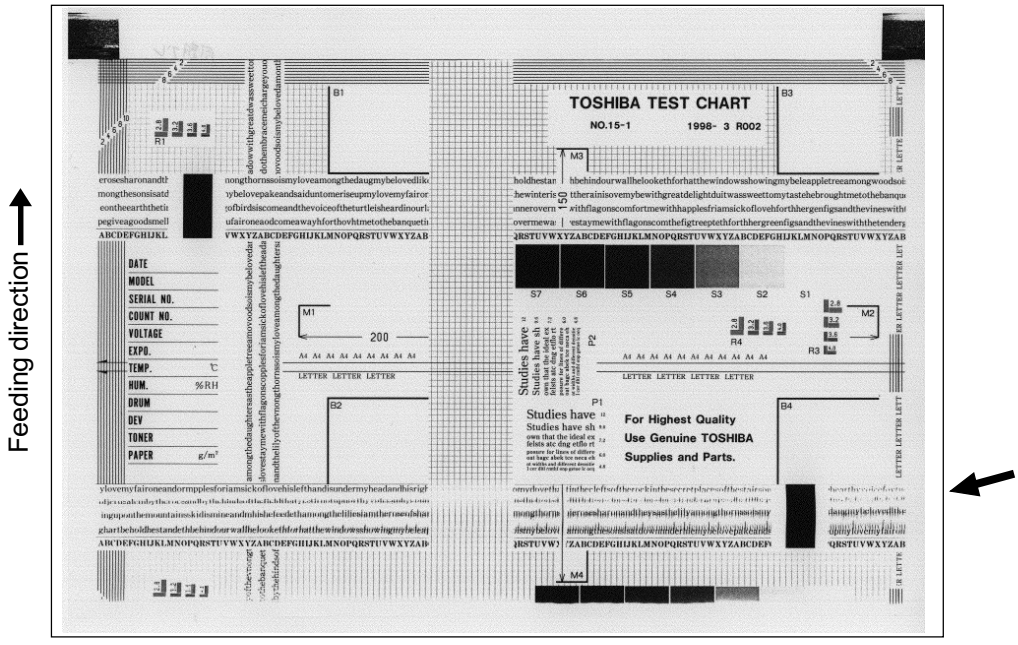

Step	Cause/Defect area	Check items	Measures
1	_	Toner image paper on drum normal?	If normal, perform step 2 to 4. Otherwise perform step 5 and after.
2	Registration roller	Registration roller dirty?	Clean roller surface with alcohol, or replace roller.
3	Pinch roller	Pinch roller spring out of place?	Re-mount or replace spring.
4	Heat roller	Heat roller rotation defective?	Check heat roller drive system. Replace gear or roller if necessary.
5	Process unit (Drum gear, cleaner paddle drive gear, toner recovery auger drive gear)	Foreign matter or toner on gears?	Clean gears.
6	Process unit (Drum)	Large scratch on drum?	Replace process unit or drum.
7	Carriage operation	Slider sheet defective?	Replace slider sheet.
8		Any abnormalities on carriage feet?	Replace feet.
9		Tension of timing belt inappropriate?	Adjust the tension.
10		Carriage drive system malfunctioning?	Check carriage drive system.
11	Scanner	Mirror loosely mounted?	Fix mirror properly.
12		Wire and timing belt tension proper?	Re-install wire and timing belt with jig.
13	Drum drive system	Drum drive system malfunctioning?	Clean or replace gears if they have stain or scratches.
14	Main drive gear assembly	Main drive gear assembly improperly mounted?	Re-install main drive gear assembly with jig.

5. UPDATING THE FIRMWARE

5.1 Outline

When you want to use the latest version of the firmware, or when the firmware is damaged and the copier is inoperable, the following procedure is used to update the firmware.

The firmware contains two types of data: Main Data (program data/function data/language data) stored in the flash ROM on the main PWA, and Scanner Data stored in the flash ROM on the scanner control PWA. The updating procedures vary with the data types. For details, refer to each procedure.

Important:
- Before updating, be sure to print "FUNCTION LIST." In case the updating fails for some reason disabling this machine from operating, set the functions by checking with this list and then restore the machine.
- If updating is performed with the FAX kit (GD-1061) installed, the communication journal data, communication error history data, communication protocol data, and job data will be erased. Before updating, check that there is no job data and print each list of communication journal data, communication error history data, and communication protocol data if necessary.

Downloading data from the recovery PWA.

→ Refer to 5.2 Using the recovery PWA (on page 5-2).

Using the batch file of the MS-DOS, downloading data from the PC.

→ Refer to 5.3 Using the batch file (on page 5-8).

Using the TOSHIBA Viewer, downloading data from the PC.

→ Refer to 5.4 Using the TOSHIBA Viewer (on page 5-20).

Using the RDC (Remote Diagnosis Configuration), downloading data.

* The GD-1061 (FAX kit: Option) is required.

→ Refer to the RDC Manual.

Note: The version of the firmware currently installed can be confirmed in the "FUNCTION LIST (In SERVICE MODE)."

5.2 Using the Recovery PWA

Downloading procedures differ with the main data and the scanner data. Refer to the following sections:

- Main data: → 5.2.1 Using the main recovery PWA (this page)
- Scanner data: → 5.2.2 Using the scanner recovery PWA (on page 5-5)

5.2.1 Using main recovery PWA

Important: While downloading, do not turn off the power of the copier. Data may be damaged, causing the copier not to operate normally.

(1) On the main recovery PWA, install the ROM that stores data for the update.
Closely follow the ROM installation direction.

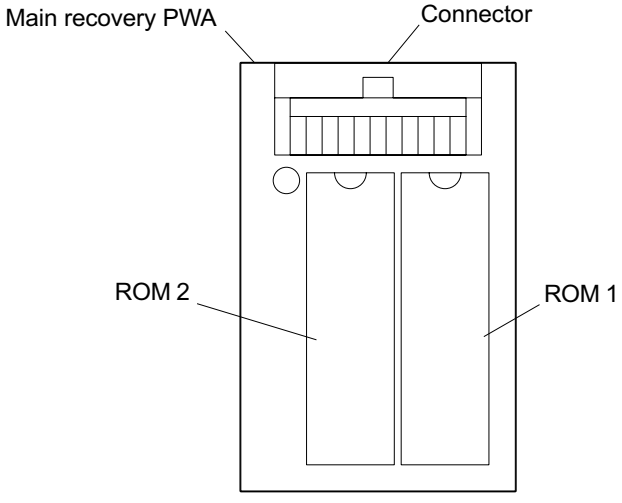

05-02-01

Fig 5-2-1

(2) Turn off the power.

(3) Remove the rear cover.

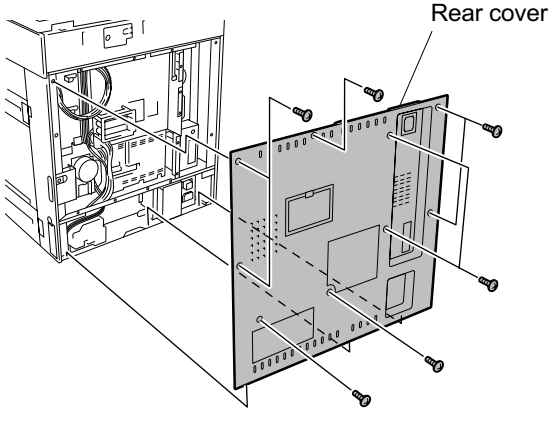

05-02-02-1

Fig 5-2-2

(4) Insert the main recovery PWA into CN10 of the main PWA, with the ROM mounting side facing down.

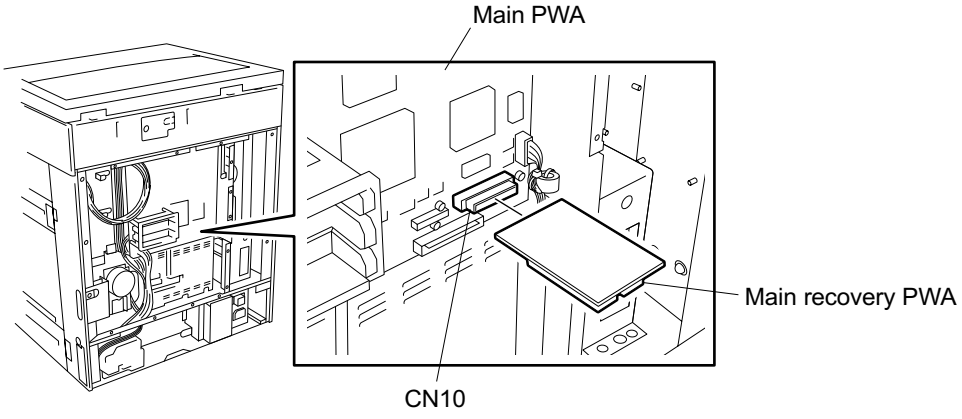

05-02-03

Fig 5-2-3

(5) Turn on the power.

Downloading of the main data starts.

The downloading status is displayed on the LCD of the copier as follows:

- Data is being downloaded from the ROM on the recovery PWA to the DRAM on the main PWA.
  The number of displayed squares (■) increases.

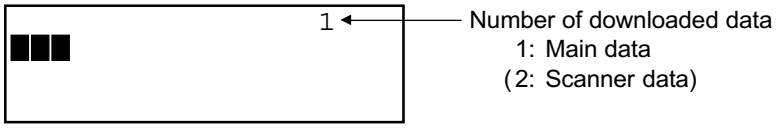

- Data is being stored in the flash ROM from the DRAM.
  The number of displayed squares (■) decreases.

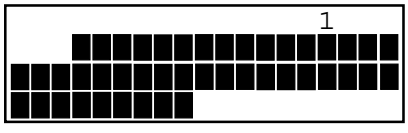

- Downloading is completed.
  All dots are blinking.

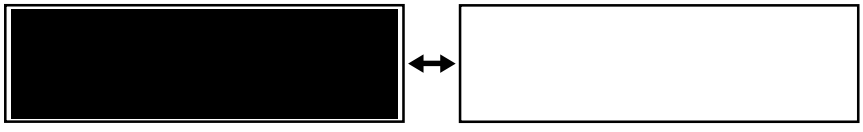

Note: It takes approx. 5 minutes to download the main data.

(6) Turn off the power.

(7) Remove the main recovery PWA and attach the rear cover.

Important: Only when the main data is downloaded after changing the main PWA.
In such a case, follows the step (a) through (g) described below.

(a) Holding down the [0] and [8] keys, turn on the power.
The copier enters the System mode.

(b) Enter “388” using the numeric keys and press the [SET]/[START] key.
The total counter value is baked up.

(c) Turn off the power.

(d) Holding down the [1], [3] and [*] keys, turn on the power and wait until "Please wait" message is displayed.

(e) Turn off the power.

(f) Holding down the [1], [3] and [#] keys, turn on the power and wait until "Please wait" message is displayed.

(g) Turn off the power.

(8) Holding down the [*], and [#] keys, turn on the power and wait until "Please wait" message is displayed.
The memory is cleared.

Important: After downloading the data, perform memory clear by turning the power ON while holding down the [*] and [#] keys. This machine may not operate normally if this operation is not performed. Also, if memory clear is performed by any operation other than the above, the function setting data, user setting data, etc. may be erased. Do not perform any memory clear operation other than the above.

(9) Turn off the power.

5.2.2 Using the scanner recovery PWA

Important: Do not turn off the power of the copier while downloading. Data may be damaged, causing the copier not to operate normally.

(1) On the scanner recovery PWA, install the ROM that stores data for the update.
Closely follow the ROM installation direction.

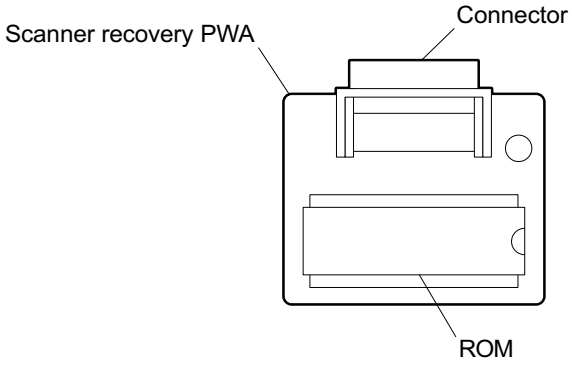

05-02-04

Fig 5-2-4

(2) Turn off the power.

(3) Open the Original cover (KA-1600PC)/ADF (MR-2012)/RADF (MR-3011).

(4) Removes the original glass and the original glass stay.

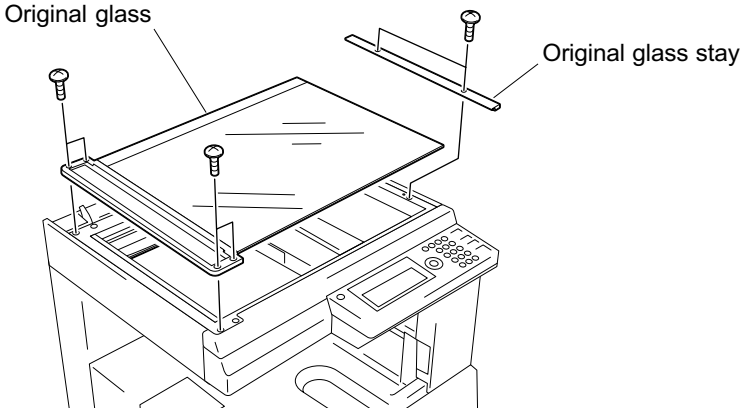

05-02-05

Fig 5-2-5

(5) Remove the blind plate.

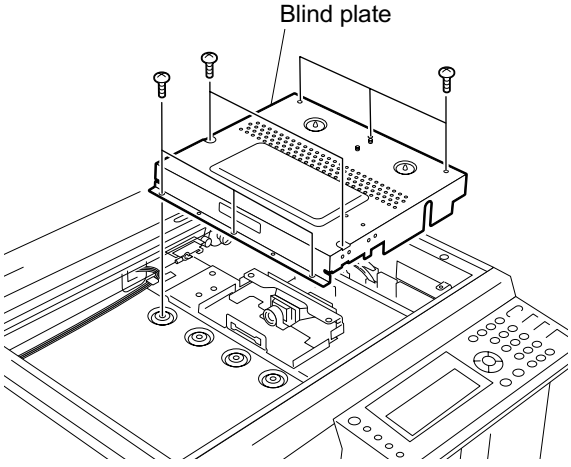

05-02-06-1

Fig 5-2-6

(6) Insert the main recovery PWA into CN3 of the scanner control PWA, with the ROM mounting side facing outside the copier.

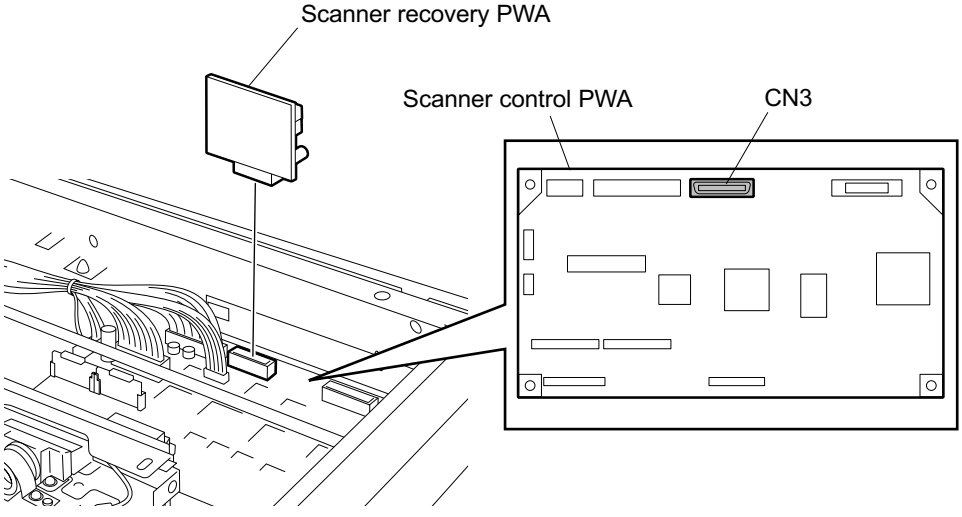

05-02-07-1

Fig 5-2-7

(7) Turn on the power.
Downloading of the scanner data starts.

The exposure lamp flashes as follows depending on the downloading status.

- The exposure lamp flashes once: Downloading starts.
- The exposure lamp flashes twice: Downloading ends.

Note: It takes approx. 10 to 20 seconds to download the scanner data.

(8) Turn off the power.

(9) Remove the scanner recovery PWA.

(10) Attach the blind plate.

(11) Attaches the original glass and the original glass stay.

Note: When attachings the original glass and the original glass stay, adjustment is required. For adjusting procedure, refer to the following section:
→ (b) Installing original glass of 1.8.1 Installing glass

Important: When the power is turned ON after completing the updating, an error may occur with “F14” displayed on the LCD. In such a case, follows the steps (12) through (15) described below.

(12) Turn off the power.

(13) Holding down the [0] and [8] keys, turn on the power.
The copier enters the System mode.

(14) Enter “389” using the numeric keys and press the [SET] / [START] key.
The total counter value is backed up.

(15) Turn off the power.

5.3 Using the Batch File

You can execute the download program from the batch file on MS-DOS and download the firmware into the copier from the PC for update.

This method consists of the following two procedures: “Download Disk Creation” and “Download Run Operation.” Once download disks are created, you can update the firmware in more than one copier or other machines to the one of the same latest version simply by performing the download operation using the created download disks.

Important:

- The following environment is required to execute the download program.

  PC: IBM PC/AT or compatible machine
  (Requires a parallel interface conforming to IEEE1284)

  OS: MS-DOS or Windows 95/98

  Cable: Parallel cable conforming to IEEE1284

- While the data is being updated, do not turn the copier or PC power OFF, or the data may be destroyed and the copier may fail to operate normally.

5.3.1 Creating Download Disks

For downloading, it is necessary to create “download disks” containing the download program and update data. This procedure requires two blank floppy disks. They should be prepared before following the procedure described below.

Important:

- Do not remove the floppy disk from the drive until you are instructed to do so. The disk or drive may be damaged.
- The download program consists of the following files:

  MKRPCDSK.BAT
  DISK.EXE

  These two files must be stored under the same directory (folder). If they are stored under different directories, the download program cannot be run normally.

  Described below is an example where a “work” directory is created under the route directory on drive C and then the program files are stored.

The MS-DOS prompt screen shows the following:

```
C:\work>dir

Volume in drive C has no label
Volume Serial Number is XXXX-XXXX
Directory of C:\work

<DIR>        11-15-00  1:19p .
<DIR>        11-15-00  1:19p ..
DISK     EXE     X,XXX,XXX  XX-XX-XX XX:XX  Disk.exe
MKRPCDSK BAT           XXX  XX-XX-XX XX:XX  mkrpcdsk.bat
         2 file(s)      X,XXX,XXX bytes
         2 dir(s)   X,XXX,XXX,XXX bytes free

C:\work>
```

05-03-001

(1) Type “mkrpcdsk” and press the [Enter] key.

```
C:\work>mkrpcdsk
```

05-03-002

The batch file is executed and the download disk creation program is started.

```
Attached the label "xxxxxxx Disk1" to the new diskette and insert
It into the device (For Disk1).
Press any key to continue...
```

05-03-003

(2) Insert a blank floppy disk (Disk 1) in the drive and press the [Enter] key.

```
Insert new diskette for drive A:
And press ENTER when ready...
```

05-03-004

(3) Press the [Enter] key.

Formatting of Disk 1 begins.

```
Formatting 1.44M
XX percent completed.
```

05-03-005

When formatting is completed, the following screen appears.

```
Formatting 1.44M
Format complete.
System transferred

Volume label (11 characters, ENTER for none)?
```

05-03-006

(4) Press the [Enter] key.

(5) Type “n” and press the [Enter] key.

```
  X,XXX,XXX bytes total disk space
    XXX,XXX bytes used by system
  X,XXX,XXX bytes available on disk

        XXX bytes in each allocation unit.
      X,XXX allocation units available on disk.

Volume Serial Number is XXXX-XXXX

Format another (Y/N)? n
```

05-03-007

The download program is copied to Disk 1.

```
Copying files to FDD.

AUTOEXEC.BAT
CONFIG.SYS
FINDRAMD.EXE
POUT16.EXE
RPC.BAT
SETRAMD.BAT
ROM.01
HIMEM.SYS
RAMDRIVE.SYS
```

05-03-008

When copying to Disk 1 is completed, the following screen appears.

```
Attached the label "xxxxxxx Disk2" to the new disk and insert
It into the device (For Disk2).
Press any key to continue...
```

05-03-009

(6) Remove Disk 1 from drive A.

(7) Insert a blank floppy disk (Disk 2) in drive A, press the [Enter] key.

```
Insert new diskette for drive A:
And press ENTER when ready...
```

05-03-010

(8) Press the [Enter] key.

Formatting of Disk 2 begins.

```
Formatting 1.44M
XX percent completed.
```

05-03-011

When formatting is completed, the following screen appears.

```
Formatting 1.44M
Format complete.
System transferred

Volume label (11 characters, ENTER for none)?
```

05-03-012

(9) Press the [Enter] key.

(10) Type “n” and press the [Enter] key.

```
  X,XXX,XXX bytes total disk space
    XXX,XXX bytes used by system
  X,XXX,XXX bytes available on disk

        XXX bytes in each allocation unit.
      X,XXX allocation units available on disk.

Volume Serial Number is XXXX-XXXX

Format another (Y/N)? n
```

05-03-013

The download program is copied to Disk 2.

```
Copying files to FDD.

ROM.O2
SROM.EXE
```

05-03-014

When copying to Disk 2 is completed, the following screen appears.

```
...
...
      2 files have been successfully copied.
The diskette has been created.
Press the [Enter] key to terminate.
```

05-03-015

(11) Press the [Enter] key.

Creation of the download disks (Disks 1 and 2) is now completed. Using the created download disks, you can update the firmware in more than one copier or other machines to the one of the same latest version simply by performing the download operation. For the download operating procedure, refer to “5.3.2 Downloading.”

5.3.2 Downloading

Download the firmware by using the download disks (Disks 1 and 2) created in the procedure of “5.3.1 Creating Download Disks”

Important:
- The download program cannot be run normally at the MS-DOS prompt after Windows 95/98 is started. Once end Windows, insert the download disk (Disk 1) in the drive, and turn the power ON to directly start the program from the floppy disk.
- While the data is being updated, do not turn the copier or PC power OFF, or the data may be destroyed and the copier may fail to operate normally.
- Do not remove the floppy disk from the drive until you are instructed to do so. The disk or drive may be damaged.

(1) Insert the download disk (Disk 1) in the floppy disk drive and turn the PC power ON.

The download menu screen appears.

```
Microsoft Windows 98 Startup Menu

   1.Start PC recovery (Main)
   2.Start PC recovery (Scanner Unit)
   3.Start PC recovery (Main + Scanner Unit)

Enter a choice:1    Time remaining:60
```

05-03-016

(2) Select download data by pressing the [↑] or [↓] key on the PC and press the [Enter] key.

Notes: • The relations between the menu and the data to be downloaded are as follows:

1. Start PC Recovery (Main) → The main data only is downloaded.
2. Start PC Recovery (Scanner Unit) → The scanner data only is downloaded.
3. Start PC Recovery (Main + Scanner Unit)
   → Both the main data and scanner data are downloaded.
   (The main data is downloaded, followed by the scanner data.)

• If 60 seconds elapse without performing any operation after the download menu is displayed, "1. Start PC recovery (Main)" will be selected automatically.

The necessary files are copied to the temporary area in the PC from Disk 1.

```
Copying to the temporary area.
    1 file(s) copied.
    1 file(s) copied.
    1 file(s) copied.
```

05-03-017

When copying is completed, the following screen appears.

```
Insert the Disk2.
Press any key to continue.
```

05-03-018

(3) Remove Disk 1 from the drive and insert Disk 2. Then press any key. The necessary files are copied to the temporary area in the PC from Disk 2.

```
Copying to the temporary area.
    1 file(s) copied.
```

05-03-019

When copying is completed, the following screen appears.

```
Turn off the main power of the copier.
By pressing the [2],[*] and [#] keys, turn on the main power
Of the copier.
Connect the parallel cable.
Press any key to continue...
```

05-03-020

The following operations are different depending on the menu selected in step (2).

When 1. Start PC Recovery (Main) is selected:

→ Refer to "Downloading procedure for main data." (this page)

When 2. Start PC Recovery (Scanner Unit) is selected:

→ Refer to "Downloading procedure for scanner data." (on page 5-17)

When 3. Start PC Recovery (Main + Scanner Unit) is selected:

→ Refer to "Downloading procedure for main data" and "Downloading procedure for scanner data."

Downloading procedure for main data: Steps (4) through (7)

(4) Turn the copier power OFF and connect it to the PC through the parallel cable.

(5) While pressing the [2], [*] and [#] keys on the copier, turn the power ON.

The following appears on the LCD.

(6) Press any key on the PC.

Downloading of the main data begins.

Screen display on the PC

```
Writing main unit program.

/******************************/
/*  PC recovery application    */
/*  Copyright (C) Toshiba TEC  */
/******************************/
```

05-03-021

LCD display on the copier

Boxes (■) are displayed one by one (2 rounds).

Boxes (■) are erased one by one.

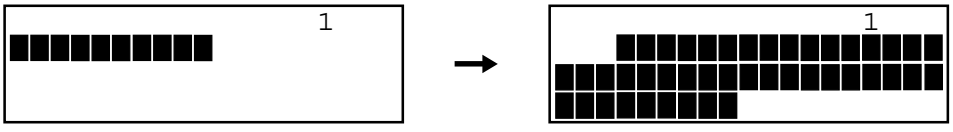

Important: Some time after downloading begins, the message prompting you to perform the next operation appears on the PC screen. However, downloading is in progress until the LCD of the copier blinks as shown below. Do not perform any operation. Performing any operation during this period may cause the downloading to be discontinued and fail and the copier may not be recovered unless you use the recovery PWA.

Note: The downloading time is about 8 minutes.

When downloading ends, all the dots on the copier LCD will blink.

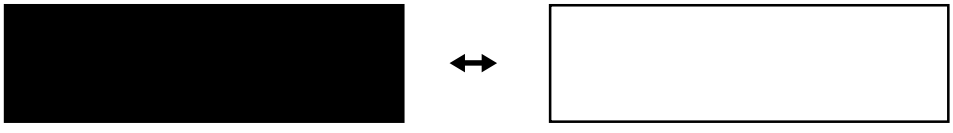

(7) After confirming that all the dots on the copier LCD screen are blinking, perform the following operation according to the items in the download menu selected.

When 1. Start PC Recovery (Main) is selected:

→ Proceed to step (11). (on page 5-19)

When 3. Start PC Recovery (Main + Scanner Unit) is selected:

→ The following screen appears on the PC. Thereafter, perform downloading of scanner data by referring to "Downloading procedure for scanner data."

```
Turn off the main power of the copier.
By pressing the [2],[*] and [#] keys, turn on the main power
Of the copier.
Connect the parallel cable.
Press any key to continue...
```

05-03-022

Downloading procedure for scanner data: Steps (8) through (11)

(8) Turn the copier power OFF and connect it to the PC through the parallel cable.

(9) While pressing the [2], [*] and [#] keys on the copier, turn the power ON.

The following appears on the copier LCD.

(10) Press any key on the PC.

Downloading of the main data begins.

Screen display on the PC

```
Writing scanner unit program.

/******************************/
/*  PC recovery application    */
/*  Copyright (C) Toshiba TEC  */
/******************************/
```

05-03-023

LCD display on the copier

Boxes (■) are displayed one by one.

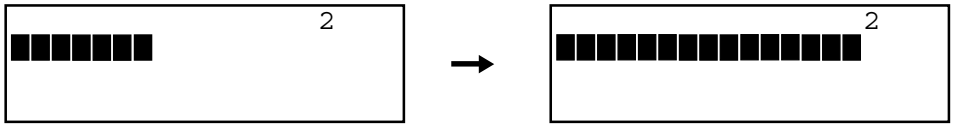

Important: Some time after downloading begins, the message prompting you to perform the next operation appears on the PC screen. However, downloading is in progress until the LCD of the copier blinks as shown below. Do not perform any operation. Performing any operation during this period may cause the downloading to be discontinued and fail and the PC may not be recovered unless you use the recovery PWA.

Note: The downloading time is about 1 minute and 30 seconds.

When downloading ends, all the dots on the copier LCD will blink.

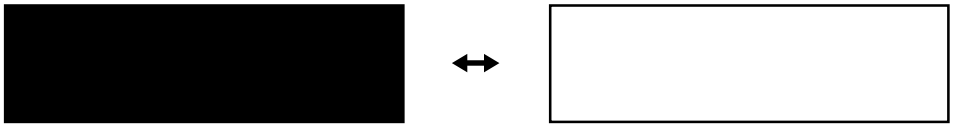

(11) When downloading ends, the following screen appears.

```
Would you like to have the device programmed data into the next
Machine?
YES ── press [Enter]
NO  ── press [Ctrl]+C
```

05-03-024

To perform downloading again:

→ Press the [Enter] key and follow the selected menu again.

To update the main data, proceed to step (4). (on page 5-15)

To update the scanner data, proceed to step (8). (on page 5-17)

To terminate the download program:

→ Press the [C] key while pressing the [Ctrl] key and follow step (12) and subsequent.

(12) Press the [Y] key.

```
Terminate batch job(Y/N)?y
```

(13) Turn the copier and PC power OFF.

Only when the main data is downloaded, perform the following operation to clear the memory.

(14) While pressing the [*] and [#] keys on the copier, turn the power ON and wait until "Please wait" message is displyed.

(15) Turn the copier power OFF.

5.4 Using the TOSHIBA Viewer

Using the TOSHIBA Viewer, you can download the firmware from the PC to this copier for updating.

Important:
- Data to be downloaded should be stored in the same drive as the TOSHIBA Viewer program. If the data is stored in a different drive (including a floppy disk or the drive of another PC connected to the network), downloading may not be performed normally.
- Do not turn off the power of the copier and the PC while data is being updated. Data may be damaged causing the copier not to operate normally.

(1) Start the TOSHIBA Viewer, and then Click “Setup” on the main welcome menu.

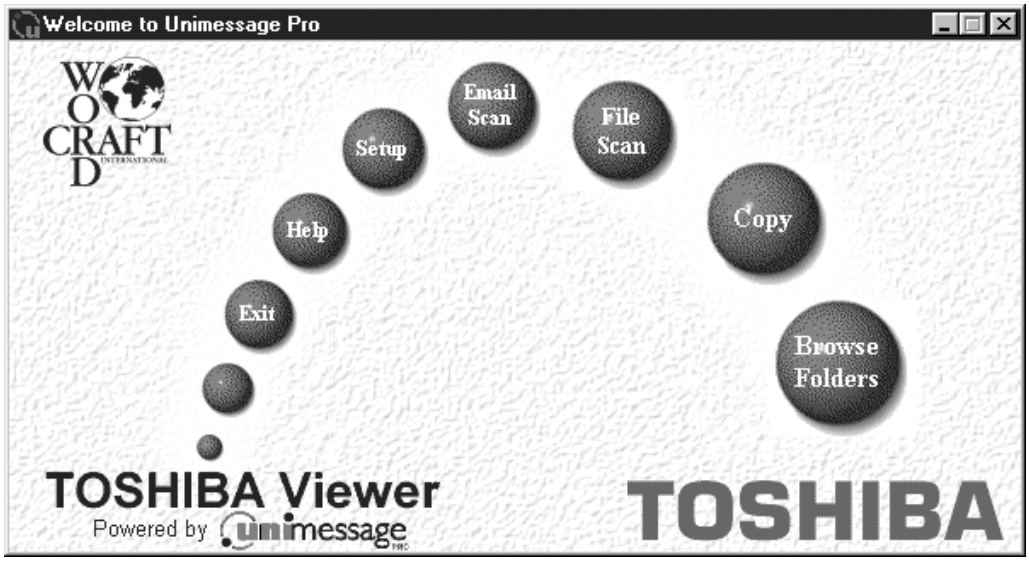

Fig. 5-4-1

The Toshiba Setup screen appears.

(2) Double click “Download” in Data sources.

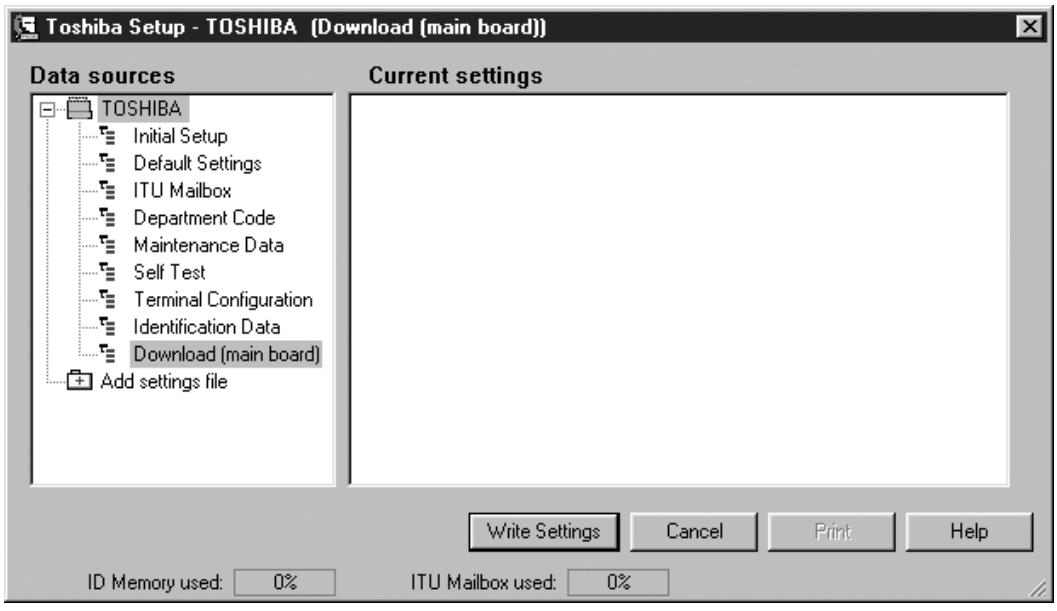

Fig. 5-4-2

The Service setting dialog box appears.

(3) Enter the password “TSBSERVICE”.

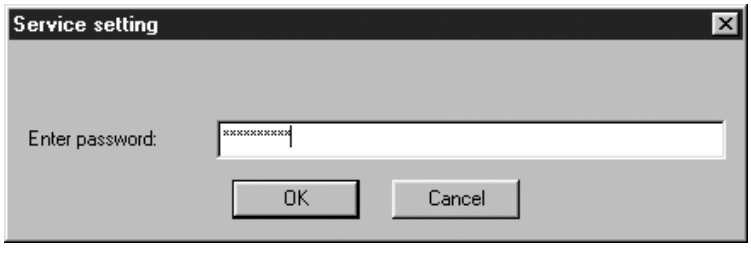

Fig. 5-4-3

(4) Click “OK”.

The Download firmware update dialog box appears.

(5) Select the file for the download firmware.

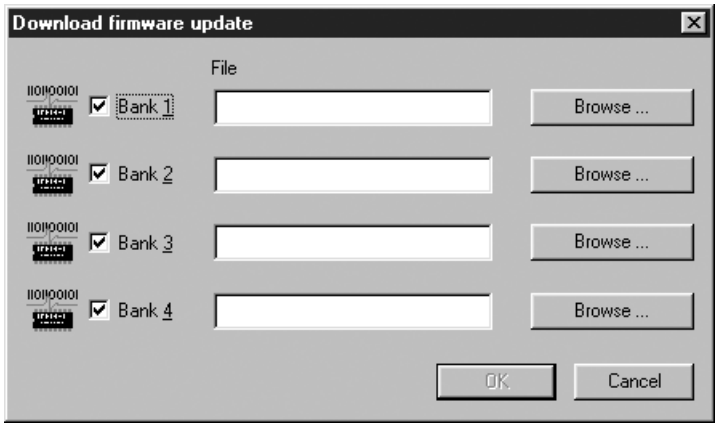

Fig. 5-4-4

Click “Browse” to select the file to be downloaded.

The selected files are displayed in File.

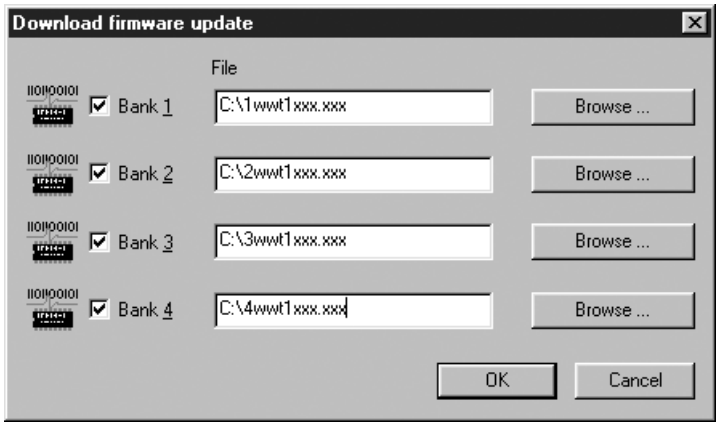

Fig. 5-4-5

Notes: • The files with the checked boxes are downloaded. Up to four files can be downloaded.

• The following files should be selected for the banks. Select files according to bank.

Bank 1 : Program data
Bank 2 : Function data
Bank 3 : Language data
Bank 4 : Scanner data

When an inappropriate file is selected for the bank, the following message is displayed. Select the appropriate file.

Fig. 5-4-6

(6) Click "OK".

Downloading starts and the file that is downloaded is displayed.

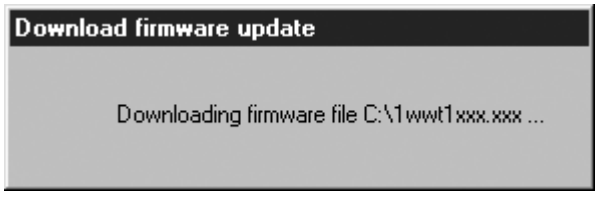

Fig. 5-4-7

Notes: • It takes approx. 20 minutes to download the data (when four files are downloded).

• The copier is automatically reset while downloading.

When the downloading is completed, the following dialog box is displayed.

Fig. 5-4-8

(7) Click "OK".

6. WIRE HARNESS CONNECTION DIAGRAMS

6.1 AC Wire Harness

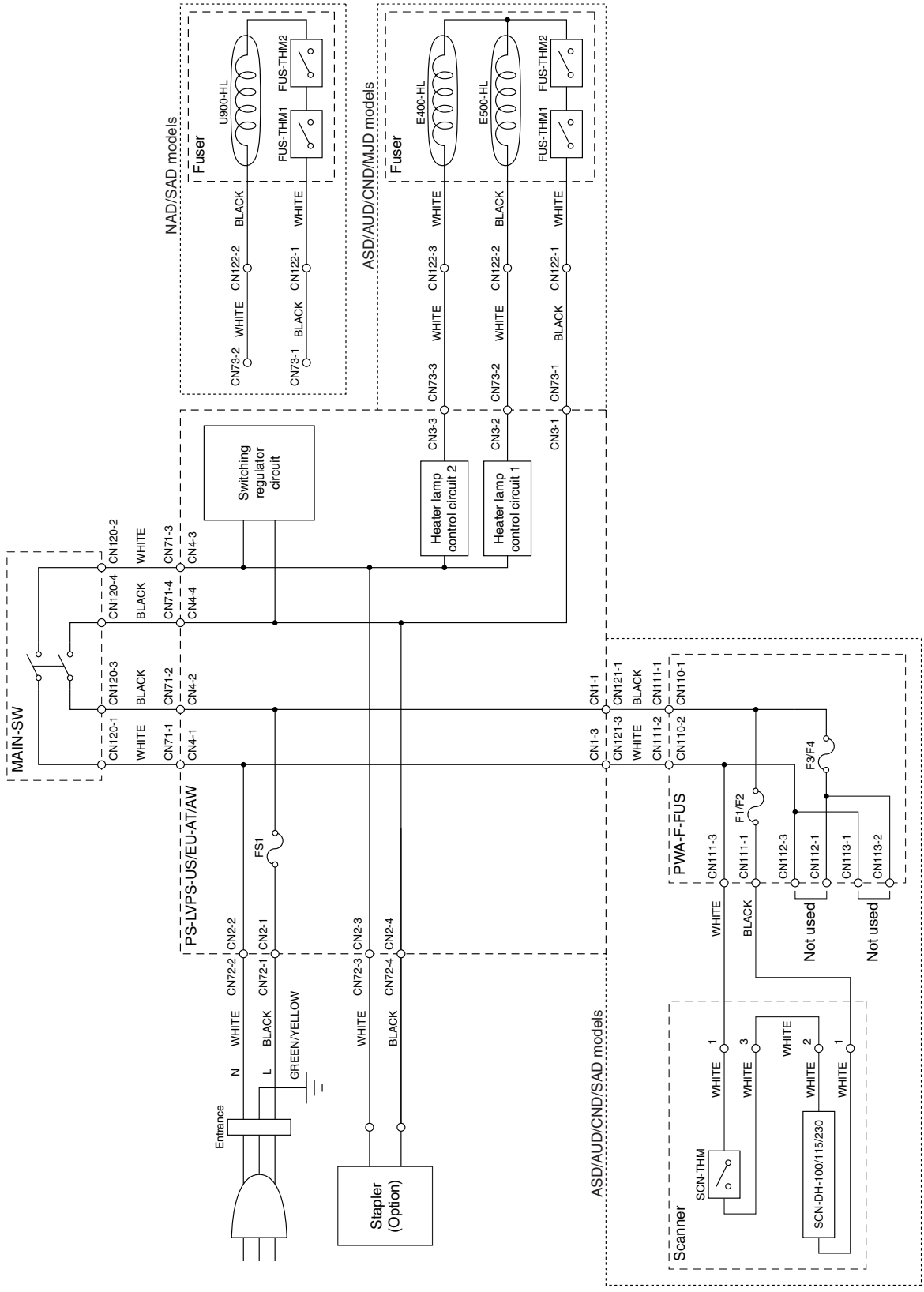

06-01-01

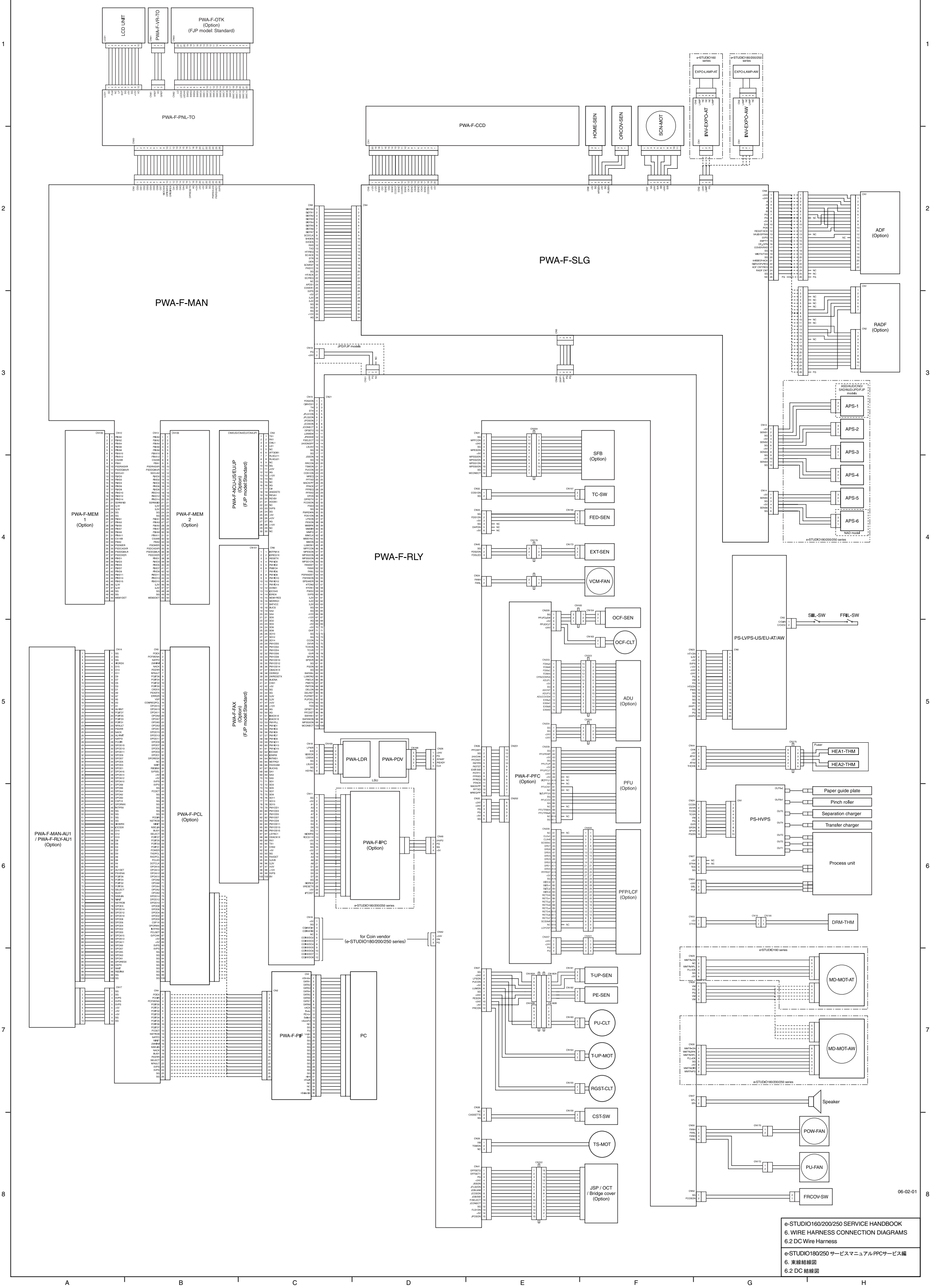

e-STUDIO160/200/250 SERVICE HANDBOOK
6. WIRE HARNESS CONNECTION DIAGRAMS
6.2 DC Wire Harness

e-STUDIO180/250 サービスマニュアルPPCサービス編
6. 束線結線図
6.2 DC 結線図

6.3 Connector Table

PWA-F-MAN

CN3 PWA-F-MAN (CN3) <-> PWA-F-NCU- (US: CN9)/(EU: CN4)/(JP: CN4)

Pin No	Symbol	Name	Active
1	TX1	FAX transmit data signal	-
2	RX1	FAX receive data signal	-
3	CML1	CML relay control signal	H
4	LD1	Dial pulse generate signal	H:Dial make
5	NC	Non connection	-
6	ATT3DB1	Attenuator signal	H:3db inserted
7	RLADJ11	Return loss adjust signal 1	-
8	RLADJ21	Return loss adjust signal 2	-
9	NC	Non connection	-
10	SG	Signal ground	-
11	-12V	-12V	-
12	AG	Analog ground	-
13	+12V	+12V	-
14	NC	Non connection	-
15	NC	Non connection	-
16	AG	Analog ground	-
17	CI1	CI detect signal	L
18	ANSDET0	Answer tone detect signal	-
19	REVA1	Line current detect signal	-
20	REVB1	Line current reverse detect signal	-
21	HOOK1	Hook detect signal	L:Off hook H:On hook
22	NC	Non connection	-
23	5VPS	+5V (When Power saver mode = Supplied)	-
24	SG	Signal ground	-
25	+5V	+5V	-
26	-12V	-12V	-
27	AG	Analog ground	-
28	+12V	+12V	-
29	NC	Non connection	-
30	NC	Non connection	-

CN4 PWA-F-MAN (CN4) <-> PWA-F-PIF (CN2)

Pin No	Symbol	Name	Active
1	POEX	GDI gate control signal	H:Open
2	PCDIR	PC I/F direction signal	L:to PC H:from PC
3	PCFWENA	PCL/GDI bus arbitration enable signal	L
4	PCIFD0	PC I/F data bus 0	-
5	PCIFD1	PC I/F data bus 1	-
6	PCIFD2	PC I/F data bus 2	-
7	PCIFD3	PC I/F data bus 3	-
8	PCIFD4	PC I/F data bus 4	-
9	PCIFD5	PC I/F data bus 5	-
10	PCIFD6	PC I/F data bus 6	-
11	PCIFD7	PC I/F data bus 7	-
12	PCDET	PC I/F PWA detect signal	L:Connected
13	NSTROB	PC I/F nStrobe/HostClk signal	-
14	NATFD	PC I/F nAutoFd/HostBusy/HostAck signal	-
15	NINIT	PC I/F nInit/nReverseRequest signal	-
16	2WNINI	PC I/F interrupt signal	L
17	NSELIN	PC I/F nSelectin/1284 active signal	-
18	NACK	PC I/F nAck/PtrClk/PerihClk signal	-
19	BUSY	PC I/F Busy/PtrBusy/PerihAck signal	-
20	PEERR	PC I/F PError/AckDataReq/nAckReverse signal	-
21	SELECT	PC I/F Select/Xflag signal	-
22	NFAULT	PC I/F nFault/DataAvail/nPeriphRequest signal	-
23	5VPS	+5V (When Power saver mode = Supplied)	-
24	5VPS	+5V (When Power saver mode = Supplied)	-
25	SG	Signal ground	-
26	SG	Signal ground	-

CN5 PWA-F-MAN (CN5) <-> PWA-F-PCL

Pin No	Symbol	Name	Active
1	POEX	GDI gate control signal	H:Open
2	PCFWENA	PCL/GDI bus arbitration enable signal	L
3	NATFD	PC I/F nAutoFd/HostBusy/HostAck signal	-
4	2WNINI	PC I/F interrupt signal	L
5	NACK	PC I/F nAck/PtrClk/PerihClk signal	-
6	PEERR	PC I/F PError/AckDataReq/nAckReverse signal	-
7	NFAULT	PC I/F nFault/DataAvail/nPeriphRequest signal	-
8	PCIFD6	PC I/F data bus 6	-
9	PCIFD4	PC I/F data bus 4	-
10	PCIFD2	PC I/F data bus 2	-
11	PCIFD0	PC I/F data bus 0	-
12	CRDYX	PCL command ready signal	L
13	PEADYX	PCL print ready signal	L
14	ERROR	PCL error signal	L:Error
15	VSP	VSP signal	L
16	COMREQPCL	PCL command request signal	L
17	DPOA15	DPO I/F address bus 15	-
18	DPOA13	DPO I/F address bus 13	-
19	DPOA11	DPO I/F address bus 11	-
20	DPOA9	DPO I/F address bus 9	-
21	DPOA7	DPO I/F address bus 7	-
22	DPOA5	DPO I/F address bus 5	-
23	DPOA3	DPO I/F address bus 3	-
24	DPOA1	DPO I/F address bus 1	-
25	DPOD15	DPO I/F data bus 15	-
26	DPOD13	DPO I/F data bus 13	-
27	DPOD11	DPO I/F data bus 11	-
28	DPOD9	DPO I/F data bus 9	-
29	DPOD7	DPO I/F data bus 7	-
30	DPOD5	DPO I/F data bus 5	-
31	DPOD3	DPO I/F data bus 3	-
32	DPOD1	DPO I/F data bus 1	-
33	DPORESX	DPO reset signal	L
34	NC	Non connection	-
35	WAIT	Wait signal	L
36	RBDINX	NIC connect signal	L:Connected
37	G/PSEL	GDI/PCL select signal	L:PCL H:GDI
38	+5V	+5V	-
39	+5V	+5V	-
40	5VPS	+5V (When Power saver mode = Supplied)	
41	5VPS	+5V (When Power saver mode = Supplied)	
42	SG	Signal ground	-
43	PCDET	PC I/F PWA detect signal	L:Connected
44	SG	Signal ground	-
45	SG	Signal ground	-
46	SG	Signal ground	-
47	SG	Signal ground	-
48	SG	Signal ground	-
49	SG	Signal ground	-
50	SG	Signal ground	-
51	PCDIR	PC I/F direction signal	L:to PC H:from PC
52	NSTROB	PC I/F nStrobe/HostClk signal	-
53	NINIT	PC I/F nInit/nReverseRequest signal	-
54	NSELIN	PC I/F nSelectin/1284 active signal	-
55	BUSY	PC I/F Busy/PtrBusy/PerihAck signal	-
56	SELECT	PC I/F Select/Xflag signal	-
57	PCIFD7	PC I/F data bus 7	-
58	PCIFD5	PC I/F data bus 5	-
59	PCIFD3	PC I/F data bus 3	-
60	PCIFD1	PC I/F data bus 1	-
61	POWER	PCL power on signal	H:ON
62	TXDPCL	PCL transmit data signal	-
63	RXDPCL	PCL receive data signal	-
64	PCLVD	PCL video data signal	-
65	DOTCLK	EET dot clock	-
66	DPOA16	DPO I/F address bus 16	-
67	DPOA14	DPO I/F address bus 14	-
68	DPOA12	DPO I/F address bus 12	-
69	DPOA10	DPO I/F address bus 10	-
70	DPOA8	DPO I/F address bus 8	-
71	DPOA6	DPO I/F address bus 6	-
72	DPOA4	DPO I/F address bus 4	-
73	DPOA2	DPO I/F address bus 2	-
74	DPOA0	DPO I/F address bus 0	-
75	DPOD14	DPO I/F data bus 14	-
76	DPOD12	DPO I/F data bus 12	-
77	DPOD10	DPO I/F data bus 10	-
78	DPOD8	DPO I/F data bus 8	-
79	DPOD6	DPO I/F data bus 6	-
80	DPOD4	DPO I/F data bus 4	-
81	DPOD2	DPO I/F data bus 2	-
82	DPOD0	DPO I/F data bus 0	-
83	CSP1X	IFAX chip select signal	L
84	DPORWX	DPO read/write signal	L:Write H:Read
85	INTPRX	NIC/IFAX interrupt printer signal	L
86	PCLSET	PCL PWA detect signal	L:Connected
87	G/PCHK	GDI/PCL check signal	L:PCL H:GDI
88	+5V	+5V	-
89	+5V	+5V	-
90	5VPS	+5V (When Power saver mode = Supplied)	-
91	5VPS	+5V (When Power saver mode = Supplied)	-
92	SG	Signal ground	-
93	SG	Signal ground	-
94	SG	Signal ground	-
95	SG	Signal ground	-
96	SG	Signal ground	-
97	SG	Signal ground	-
98	SG	Signal ground	-
99	SG	Signal ground	-
100	SG	Signal ground	-

CN6 PWA-F-MAN (CN6) <-> PWA-F-FAX (CN101)

Pin No	Symbol	Name	Active
1	INTPM1X	FAX CODEC interrupt signal	H
2	IDREQ1X	FAX CODEC input DMA request signal	H
3	RESETX	Reset signal	L
4	PM1ID0	FAX CODEC input data bus 0	-
5	PM1ID2	FAX CODEC input data bus 2	-
6	PMI1D4	FAX CODEC input data bus 4	-
7	PM1ID6	FAX CODEC input data bus 6	-
8	PM1ID8	FAX CODEC input data bus 8	-
9	PM1ID10	FAX CODEC input data bus 10	-
10	PM1ID12	FAX CODEC input data bus 12	-
11	PM1ID14	FAX CODEC input data bus 14	-
12	DONE1	FAX CODEC job end signal	L:Job end
13	IOCS4X	I/O chip select 4 signal	L
14	IORDX	I/O read signal	L
15	MDM1RES	Modem reset signal	L
16	MDRRQ1	Modem receive data request signal	H
17	BATVCC	System SDRAM backup voltage	-
18	BUCS	Backup status signal	L: Normal H: Data lost
19	SA2	System address bus 2	-
20	SA4	System address bus 4	-
21	SD0	System data bus 0	-
22	SD2	System data bus 2	-
23	SD4	System data bus 4	-
24	SD6	System data bus 6	-
25	SD8	System data bus 8	-
26	SD10	System data bus 10	-
27	SD12	System data bus 12	-
28	SD14	System data bus 14	-
29	PM1OD0	FAX CODEC output data bus 0	-
30	PM1OD2	FAX CODEC output data bus 2	-
31	PM1OD4	FAX CODEC output data bus 4	-
32	PM1OD6	FAX CODEC output data bus 6	-
33	PM1OD8	FAX CODEC output data bus 8	-
34	PM1OD10	FAX CODEC output data bus 10	-
35	PM1OD12	FAX CODEC output data bus 12	-
36	PM1OD14	FAX CODEC output data bus 14	-
37	OBACK1X	FAX CODEC output bus acknowledge 1 signal	L
38	ODREQ1	FAX CODEC output DMA request 1 signal	H
39	2WRESETX	Power save circuit reset signal	L
40	BUENA	Backup enable signal	H:Backup data present
41	CH01	Backup control signal (Reserve)	-
42	+5V	+5V	-
43	SG	Signal ground	-
44	SG	Signal ground	-
45	3.3V	+3.3V	-
46	3.3V	+3.3V	-
47	-12V	-12V	-
48	+12V	+12V	-
49	AG	Analog ground	-
50	AG	Analog ground	-
51	IBACK1X	FAX CODEC input bus acknowledge 1 signal	L
52	IDACK1X	FAX CODEC input DMA acknowledge 1 signal	L
53	PM1PLL	FAX CODEC PLL 1 signal	H:Enable
54	PM1ID1	FAX CODEC input data bus 1	-
55	PM1ID3	FAX CODEC input data bus 3	-
56	PM1ID5	FAX CODEC input data bus 5	-
57	PM1ID7	FAX CODEC input data bus 7	-
58	PM1ID9	FAX CODEC input data bus 9	-
59	PM1ID11	FAX CODEC input data bus 11	-
60	PM1ID13	FAX CODEC input data bus 13	-
61	PM1ID15	FAX CODEC input data bus 15	-
62	IOCS9X	I/O chip select 9 signal	L
63	IOWRX	I/O write signal	L
64	INTMD1	MODEM interrupt signal	L
65	MDTRQ1	Modem transmit data request signal	H
66	FAXX33M	FAX CODEC drive clock	-
67	BUCHG	Backup charge signal	Up-edge trigger
68	SA1	System address bus 1	-
69	SA3	System address bus 3	-
70	SA5	System address bus 5	-
71	SD1	System data bus 1	-
72	SD3	System data bus 3	-
73	SD5	System data bus 5	-
74	SD7	System data bus 7	-
75	SD9	System data bus 9	-
76	SD11	System data bus 11	-
77	SD13	System data bus 13	-
78	SD15	System data bus 15	-
79	PM1OD1	FAX CODEC output data bus 1	-
80	PM1OD3	FAX CODEC output data bus 3	-
81	PM1OD5	FAX CODEC output data bus 5	-
82	PM1OD7	FAX CODEC output data bus 7	-
83	PM1OD9	FAX CODEC output data bus 9	-
84	PM1OD11	FAX CODEC output data bus 11	-
85	PM1OD13	FAX CODEC output data bus 13	-
86	PM1OD15	FAX CODEC output data bus 15	-
87	LSYNC1	FAX CODEC line synchronized signal	H
88	ODACK1X	FAX CODEC output DMA acknowledge 1 signal	L
89	RX1	FAX receive data signal	-
90	TX1	FAX transmit data signal	-
91	CH02	Connected to Analog ground	-
92	+5V	+5V	-
93	SG	Signal ground	-
94	FAXDET	FAX PWA detect signal	L:Connected
95	3.3VB	+3.3V (Backup)	-
96	3.3V	+3.3V	-
97	-12V	-12V	-
98	+12V	+12V	-
99	5VPS	+5V (When Power saver mode = Supplied)	-
100	BV	Not used	-

CN19 PWA-F-MAN (CN19) <-> PWA-F-RLY (CN51)

Pin No	Symbol	Name	Active
1	PG	Power ground	-
2	+24V	+24V	-

CN8 PWA-F-MAN (CN8) <-> PWA-F-SLG (CN4)

Pin No	Symbol	Name	Active
1	SIDTA0	Scanner image data bus 0	-
2	SIDTA1	Scanner image data bus 1	-
3	SIDTA2	Scanner image data bus 2	-
4	SIDTA3	Scanner image data bus 3	-
5	SIDTA4	Scanner image data bus 4	-
6	SIDTA5	Scanner image data bus 5	-
7	SIDTA6	Scanner image data bus 6	-
8	SIDTA7	Scanner image data bus 7	-
9	SCDCLK	Scanner image data transfer clock	-
10	SHDEN	Scanner image data horizontal effective signal	L
11	SVDEN	Scanner image data vertical effective signal	L
12	RXD	Scanner receive data signal	-
13	TXD	Scanner transmit data signal	-
14	HT/REQ	Scanner request to send signal	L
15	SC/ACK	Scanner clear to send signal	L
16	DTR	Scanner data terminal ready signal	L
17	DEN	Scanner data set ready signal	L
18	SCNRST	Scanner reset signal (from Scanner unit)	L
19	PHSYC	Scanner HSYNC signal	-
20	SG	Signal ground	-
21	HT/ACK	Scanner data terminal ready signal (Reserve)	-
22	SC/REQ	Scanner data set ready signal (Reserve)	-
23	NC	Non connection	-
24	APDS1	ADF/RADF original detected signal	L:Present
25	COVER1	Original cover open detect signal	L:Open
26	5VPS	+5V (When Power saver mode = Supplied)	-
27	+5V	+5V	-
28	3.3V	+3.3V	-
29	3.3V	+3.3V	-
30	SG	Signal ground	-
31	SG	Signal ground	-
32	SG	Signal ground	-
33	+12V	+12V	-
34	AG	Analog ground	-

CN9 PWA-F-MAN (CN9) <-> PWA-F-PNL-TO (CN60)

Pin No	Symbol	Name	Active
1	OD0	Operation panel data bus 0	-
2	OD1	Operation panel data bus 1	-
3	OD2	Operation panel data bus 2	-
4	OD3	Operation panel data bus 3	-
5	OD4	Operation panel data bus 4	-
6	OD5	Operation panel data bus 5	-
7	OD6	Operation panel data bus 6	-
8	OD7	Operation panel data bus 7	-
9	5IOCS0X	5V I/O Chip select signal	L
10	OPIOWRX	Operation panel I/O write signal	L
11	OPIOIRDX	Operation panel I/O read signal	L
12	OA1	Operation panel address bus 1	-
13	OA2	Operation panel address bus 2	-
14	OA3	Operation panel address bus 3	-
15	OA4	Operation panel address bus 4	-
16	SG	Signal ground	-
17	OPRESETX	Operation panel reset signal	L
18	AG	Analog ground	-
19	-12V	-12V	-
20	+5V	+5V	-
21	+5V	+5V	-
22	SG	Signal ground	-
23	SG	Signal ground	-
24	PWRSVLED	Power save LED lighting signal	L
25	PWRSVKEY	Power save key detect signal	L
26	5VPS	+5V (When Power saver mode = Supplied)	-

CN11 PWA-F-MAN (CN11) <-> PWA-F-IPC

Pin No	Symbol	Name	Active
1	SG	Signal ground	-
2	+5V	+5V	-
3	A1	System address bus 1	-
4	A3	System address bus 3	-
5	A5	System address bus 5	-
6	A7	System address bus 7	-
7	D0	System data bus 0	-
8	D2	System data bus 2	-
9	D4	System data bus 4	-
10	D6	System data bus 6	-
11	SG	Signal ground	-
12	5IOWRX	5V I/O write signal	L
13	IOCS11X	I/O chip select 11 signal	L
14	+5V	+5V	-
15	SG	Signal ground	-
16	SG	Signal ground	-
17	+5V	+5V	-
18	A2	System address bus 2	-
19	A4	System address bus 4	-
20	A6	System address bus 6	-
21	A8	System address bus 8	-
22	D1	System data bus 1	-
23	D3	System data bus 3	-
24	D5	System data bus 5	-
25	D7	System data bus 7	-
26	SG	Signal ground	-
27	5IORDX	5V I/O read signal	L
28	5RESETX	Reset signal	L
29	+5V	+5V	-
30	IPCDET	IPC PWA (Finisher) detect signal	L:Connected

CN12 PWA-F-MAN (CN12) <-> PWA-F-MEM 1 (CN106)

Pin No	Symbol	Name	Active
1	PIXA0	PIX address bus 0	-
2	PIXA2	PIX address bus 2	-
3	PIXA4	PIX address bus 4	-
4	PIXA6	PIX address bus 6	-
5	PIXA8	PIX address bus 8	-
6	PIXA10	PIX address bus 10	-
7	PIXA12	PIX address bus 12	-
8	CS2XB	Optional memory PWA 1 chip select signal 2	L
9	PBA1	PIX SDRAM bank select address 1 signal	-
10	PSDRASXR	PIX SDRAM RAS signal	L
11	PSDDQMUR	PIX SDRAM I/O musk upper signal	L
12	SDCLK1	Optional memory PWA 1 clock signal	-
13	PIXD0	PIX data bus 0	-
14	PIXD2	PIX data bus 2	-
15	PIXD4	PIX data bus 4	-
16	PIXD6	PIX data bus 6	-
17	PIXD8	PIX data bus 8	-
18	PIXD10	PIX data bus 10	-
19	PIXD12	PIX data bus 12	-
20	PIXD14	PIX data bus 14	-
21	SDRM1ID	Optional memory PWA 1 type detect signal	L
22	3.3V	+3.3V	-
23	3.3V	+3.3V	-
24	SG	Signal ground	-
25	SG	Signal ground	-
26	PIXA1	PIX address bus 1	-
27	PIXA3	PIX address bus 3	-
28	PIXA5	PIX address bus 5	-
29	PIXA7	PIX address bus 7	-
30	PIXA9	PIX address bus 9	-
31	PIXA11	PIX address bus 11	-
32	CS1XB	Optional memory PWA 1 chip select signal 1	L
33	PBA0	PIX SDRAM bank select address 0 signal	-
34	PSDWER	PIX SDRAM write signal	L
35	PSDCASXR	PIX SDRAM CAS signal	L
36	PSDDQMLR	PIX SDRAM I/O musk lower signal	L
37	PSDCKER	PIX SDRAM clock enable signal	H
38	PIXD1	PIX data bus 1	-
39	PIXD3	PIX data bus 3	-
40	PIXD5	PIX data bus 5	-
41	PIXD7	PIX data bus 7	-
42	PIXD9	PIX data bus 9	-
43	PIXD11	PIX data bus 11	-
44	PIXD13	PIX data bus 13	-
45	PIXD15	PIX data bus 15	-
46	3.3V	+3.3V	-
47	3.3V	+3.3V	-
48	SG	Signal ground	-
49	SG	Signal ground	-
50	MEM1DET	Optional memory PWA 1 detect signal	L:Connected

CN13 PWA-F-MAN (CN13) <-> PWA-F-MEM 2 (CN106)

Pin No	Symbol	Name	Active
1	PIXA0	PIX address bus 0	-
2	PIXA2	PIX address bus 2	-
3	PIXA4	PIX address bus 4	-
4	PIXA6	PIX address bus 6	-
5	PIXA8	PIX address bus 8	-
6	PIXA10	PIX address bus 10	-
7	PIXA12	PIX address bus 12	-
8	CS4XB	Optional memory PWA 2 chip select signal 2	L
9	PBA1	PIX SDRAM bank select address 1 signal	-
10	PSDRASXR	PIX SDRAM RAS signal	L
11	PSDDQMUR	PIX SDRAM I/O musk upper signal	L
12	SDCLK2	Optional memory PWA 2 clock signal	-
13	PIXD0	PIX data bus 0	-
14	PIXD2	PIX data bus 2	-
15	PIXD4	PIX data bus 4	-
16	PIXD6	PIX data bus 6	-
17	PIXD8	PIX data bus 8	-
18	PIXD10	PIX data bus 10	-
19	PIXD12	PIX data bus 12	-
20	PIXD14	PIX data bus 14	-
21	SDRM2ID	Optional memory PWA 2 type detect signal	L
22	3.3V	+3.3V	-
23	3.3V	+3.3V	-
24	SG	Signal ground	-
25	SG	Signal ground	-
26	PIXA1	PIX address bus 1	-
27	PIXA3	PIX address bus 3	-
28	PIXA5	PIX address bus 5	-
29	PIXA7	PIX address bus 7	-
30	PIXA9	PIX address bus 9	-
31	PIXA11	PIX address bus 11	-
32	CS3XB	Optional memory PWA 2 chip select signal 1	L
33	PBA0	PIX SDRAM bank select address 0 signal	-
34	PSDWER	PIX SDRAM write signal	L
35	PSDCASXR	PIX SDRAM CAS signal	L
36	PSDDQMLR	PIX SDRAM I/O musk lower signal	L
37	PSDCKER	PIX SDRAM clock enable signal	H
38	PIXD1	PIX data bus 1	-
39	PIXD3	PIX data bus 3	-
40	PIXD5	PIX data bus 5	-
41	PIXD7	PIX data bus 7	-
42	PIXD9	PIX data bus 9	-
43	PIXD11	PIX data bus 11	-
44	PIXD13	PIX data bus 13	-
45	PIXD15	PIX data bus 15	-
46	3.3V	+3.3V	-
47	3.3V	+3.3V	-
48	SG	Signal ground	-
49	SG	Signal ground	-
50	MEM2DET	Optional memory PWA 2 detect signal	L:Connected

CN16 PWA-F-MAN (CN16) <-> Coin vendor

Pin No	Symbol	Name	Active
1	+5V	+5V	-
2	SG	Signal ground	-
3	COINVDI1	Coin vendor control input signal 1	-
4	COINVDI2	Coin vendor control input signal 2	-
5	NC	Non connection	-
6	COINVDO2	Coin vendor control output signal 2	-
7	COINVDO3	Coin vendor control output signal 3	-
8	COINVDO4	Coin vendor control output signal 4	-
9	COINVDO5	Coin vendor control output signal 5	-
10	COINVDO6	Coin vendor control output signal 6	-
11	COINVDO7	Coin vendor control output signal 7	-
12	COINVDO8	Coin vendor control output signal 8	-

CN17 PWA-F-MAN (CN17) <-> PWA-F-MAN-AU1/PWA-F-RLY-AU1

Pin No	Symbol	Name	Active
1	SG	Signal ground	-
2	SG	Signal ground	-
3	5VPS	+5V (When Power saver mode = Supplied)	-
4	5VPS	+5V (When Power saver mode = Supplied)	-
5	5VPS	+5V (When Power saver mode = Supplied)	-
6	+5V	+5V	-
7	+5V	+5V	-
8	+5V	+5V	-
9	SG	Signal ground	-
10	SG	Signal ground	-

CN18 PWA-F-MAN (CN18) <-> PWA-LDR (CN169)

Pin No	Symbol	Name	Active
1	LPWR	Laser power signal	-
2	S/H	Sample/Hold signal	L:Sample H:Hold
3	VIDEOX	Latent image data signal	-
4	LDENX	Laser enable signal	H
5	SG	Signal ground	-
6	LSU5V	+5V(for LSU drive)	-
7	SG	Signal ground	-
8	HSYNC	Hsync signal	L

PWA-F-PIF

CN1 PWA-F-PIF (CN1) <-> PC

Pin No	Symbol	Name	Active
1	nStrobe	PC I/F nStrobe/HostClk signal	-
2	DATA1	Parallel data bus 1	-
3	DATA2	Parallel data bus 2	-
4	DATA3	Parallel data bus 3	-
5	DATA4	Parallel data bus 4	-
6	DATA5	Parallel data bus 5	-
7	DATA6	Parallel data bus 6	-
8	DATA7	Parallel data bus 7	-
9	DATA8	Parallel data bus 8	-
10	nACK	PC I/F nAck/PtrClk/PerihClk signal	-
11	Busy	PC I/F Busy/PtrBusy/PerihAck signal	-
12	PError	PC I/F PError/AckDataReq/nAckReverse signal	-
13	Select	PC I/F Select/Xflag signal	-
14	nAutoFd	PC I/F nAutoFd/HostBusy/HostAck signal	-
15	NC	Non connection	-
16	SG	Signal ground	-
17	FG	Frame ground	-
18	Logic	Pull up (5VPS)	-
19	SG	Signal ground	-
20	SG	Signal ground	-
21	SG	Signal ground	-
22	SG	Signal ground	-
23	SG	Signal ground	-
24	SG	Signal ground	-
25	SG	Signal ground	-
26	SG	Signal ground	-
27	SG	Signal ground	-
28	SG	Signal ground	-
29	SG	Signal ground	-
30	SG	Signal ground	-
31	nInit	PC I/F nInit/nReverseRequest signal	-
32	nFault	PC I/F nFault/DataAvail/nPeriphRequest signal	-
33	NC	Non connection	-
34	NC	Non connection	-
35	NC	Non connection	-
36	nSelectIn	PC I/F nSelectin/1284 active signal	-

PWA-F-PNL-TO

CN61 PWA-F-PNL-TO (CN61) <-> PWA-F-VR-TO (CN61)

Pin No	Symbol	Name	Active
1	VREF	LCD density reference voltage (-12V)	-
2	VO	LCD drive voltage	-
3	GREF	LCD density reference ground (Signal ground)	-

CN62 PWA-F-PNL-TO (CN62) <-> PWA-F-OTK (CN63)

Pin No	Symbol	Name	Active
1	LO	LED illuminate voltage (+5V)	H
2	LED5X	SCAN LED illuminate signal	L
3	LED4X	FAX LED illuminate signal	L
4	SWS2	Switch scan signal 2	H
5	SWS3	Switch scan signal 3	H
6	SWS4	Switch scan signal 4	H
7	SWS5	Switch scan signal 5	H
8	SWC0	Switch condition signal 0	H:Push
9	SWC1	Switch condition signal 1	H:Push
10	SWC2	Switch condition signal 2	H:Push
11	SWC3	Switch condition signal 3	H:Push
12	SWC4	Switch condition signal 4	H:Push
13	SWC5	Switch condition signal 5	H:Push
14	SWC6	Switch condition signal 6	H:Push
15	SWC7	Switch condition signal 7	H:Push
16	SWC8	Switch condition signal 8	H:Push
17	SWC9	Switch condition signal 9	H:Push
18	SWC10	Switch condition signal 10	H:Push
19	SWC11	Switch condition signal 11	H:Push
20	SWC12	Switch condition signal 12	H:Push
21	SWC13	Switch condition signal 13	H:Push
22	SWC14	Switch condition signal 14	H:Push

LCD1 PWA-F-PNL-TO(LCD1)<->LCD UNIT(LCD1)

Pin No	Symbol	Name	Active
1	SD	LCD indicate data	-
2	FLM	Frame signal	H
3	NC	Non connection	-
4	LP	Data latch signal	H
5	SCP	Data shift clock	-
6	SG	Signal ground	-
7	+5V	+5V	-
8	SG	Signal ground	-
9	-12V	-12V	-
10	VO	LCD drive voltage	-

CN14 PWA-F-MAN (CN14) <-> PWA-F-MAN-AU1/PWA-F-RLY-AU1

Pin No	Symbol	Name	Active
1	SG	Signal ground	-
2	SG	Signal ground	-
3	SG	Signal ground	-
4	5IORDX	5V I/O read signal	L
5	D15	System data bus 15	-
6	D13	System data bus 13	-
7	D11	System data bus 11	-
8	D9	System data bus 9	-
9	D7	System data bus 7	-
10	D5	System data bus 5	-
11	D3	System data bus 3	-
12	D1	System data bus 1	-
13	A9	System address bus 9	-
14	A7	System address bus 7	-
15	A5	System address bus 5	-
16	A3	System address bus 3	-
17	A1	System address bus 1	-
18	AU1INT	NIC/IFAX kit interrupt signal	H
19	PCIFD7	PC I/F data bus 7	-
20	PCIFD5	PC I/F data bus 5	-
21	PCIFD3	PC I/F data bus 3	-
22	PCIFD1	PC I/F data bus 1	-
23	NFAULT	PC I/F nFault/DataAvail/nPeriphRequest signal	-
24	PEERR	PC I/F PError/AckDataReq/nAckReverse signal	-
25	NACK	PC I/F nAck/PtrClk/PerihClk signal	-
26	AU1INIT	NIC/IFAX kit interrupt input signal	L
27	NATFD	PC I/F nAutoFd/HostBusy/HostAck signal	-
28	PCDIR	PC I/F direction signal	L:to PC H:from PC
29	DPOD15	DPO I/F data bus 15	-
30	DPOD13	DPO I/F data bus 13	-
31	DPOD11	DPO I/F data bus 11	-
32	DPOD9	DPO I/F data bus 9	-
33	DPOD7	DPO I/F data bus 7	-
34	DPOD5	DPO I/F data bus 5	-
35	DPOD3	DPO I/F data bus 3	-
36	DPOD1	DPO I/F data bus 1	-
37	DPOA16	DPO I/F address bus 16	-
38	DPOA14	DPO I/F address bus 14	-
39	DPOA12	DPO I/F address bus 12	-
40	DPOA10	DPO I/F address bus 10	-
41	DPOA8	DPO I/F address bus 8	-
42	DPOA6	DPO I/F address bus 6	-
43	DPOA4	DPO I/F address bus 4	-
44	DPOA2	DPO I/F address bus 2	-
45	DPOA0	DPO I/F address bus 0	-
46	CSP1X	IFAX chip select signal	L
47	DPORWX	DPO read/write signal	L:Write H:Read
48	INTPRX	NIC/IFAX interrupt printer signal	L
49	SG	Signal ground	-
50	SG	Signal ground	-
51	SG	Signal ground	-
52	SG	Signal ground	-
53	5IOWRX	5V I/O write signal	L
54	IOCS3X	I/O chip select signal 3	L
55	D14	System data bus 14	-
56	D12	System data bus 12	-
57	D10	System data bus 10	-
58	D8	System data bus 8	-
59	D6	System data bus 6	-
60	D4	System data bus 4	-
61	D2	System data bus 2	-
62	D0	System data bus 0	-
63	A8	System address bus 8	-
64	A6	System address bus 6	-
65	A4	System address bus 4	-
66	A2	System address bus 2	-
67	AU1SET	NIC/IFAX PWA detect signal	L:Connected
68	PSVENA	Power saver mode enable signal	H
69	PCIFD6	PC I/F data bus 6	-
70	PCIFD4	PC I/F data bus 4	-
71	PCIFD2	PC I/F data bus 2	-
72	PCIFD0	PC I/F data bus 0	-
73	SELECT	PC I/F Select/Xflag signal	-
74	BUSY	PC I/F Busy/PtrBusy/PerihAck signal	-
75	NSELIN	PC I/F nSelectin/1284 active signal	-
76	NINIT	PC I/F nInit/nReverseRequest signal	-
77	NSTROB	PC I/F nStrobe/HostClk signal	-
78	OPOEX	GDI gate control signal	H:Open
79	DPOD14	DPO I/F data bus 14	-
80	DPOD12	DPO I/F data bus 12	-
81	DPOD10	DPO I/F data bus 10	-
82	DPOD8	DPO I/F data bus 8	-
83	DPOD6	DPO I/F data bus 6	-
84	DPOD4	DPO I/F data bus 4	-
85	DPOD2	DPO I/F data bus 2	-
86	DPOD0	DPO I/F data bus 0	-
87	DPOA15	DPO I/F address bus 15	-
88	DPOA13	DPO I/F address bus 13	-
89	DPOA11	DPO I/F address bus 11	-
90	DPOA9	DPO I/F address bus 9	-
91	DPOA7	DPO I/F address bus 7	-
92	DPOA5	DPO I/F address bus 5	-
93	DPOA3	DPO I/F address bus 3	-
94	DPOA1	DPO I/F address bus 1	-
95	DPORESX	DPO reset signal	L
96	OEPX	Non connection	-
97	WAIT	Wait signal	L
98	RBDINX	NIC connect signal	L:Connected
99	SG	Signal ground	-
100	SG	Signal ground	-

CN15 PWA-F-MAN (CN15) <-> PWA-F-RLY (CN21)

Pin No	Symbol	Name	Active
1	FDS2ON	Exit sensor output signal	H:Feeding
2	CINVD01	Coin vendor control output signal 1	-
3	TH	Heater thermistor 1 detect signal	-
4	STH	Heater thermistor 2 detect signal	-
5	JFLS1ON	JSP stack sensor (Lower) detect signal / OCT stack sensor detect signal / Bridge cover stack sensor detect signal	H:Paper full
6	JFLS2ON	JSP stack sensor (Upper) detect signal / OCT separate sensor detect signal	H:Paper full H:Initial position
7	JPOSON	Bridge cover exit sensor detect signal	H:Present
8	JCOSON	JSP cover open switch detect signal / OCT cover open switch detect signal / Bridge cover relay cover open switch detect signal	H:Cover open
9	JCONECT	JSP/OCT/Finisher detection signal	L:Connected
10	OFSET2	OCT motor drive signal 2	H
11	JJAMSW	JSP paper jam sensor detect signal / OCT paper jam sensor detect signal / Bridge cover paper jam sensor detect signal	H:Paper jam
12	JPASSW	JSP/OCT distinction signal	L:JSP H:OCT
13	FSELECT	Finisher detection signal	L:Connected
14	24VONOFF	Interlock switch detect signal	L:Front/Side cover open
15	LSU5V	+5V (for LSU drive)	-
16	SG	Signal ground	-
17	SG	Signal ground	-
18	JSSON	JSP/Bridge cover solenoid drive signal	H:ON
19	SG	Signal ground	-
20	RRCON	Registration roller clutch drive signal	H:ON
21	TSMON	Toner supply motor drive signal	H:ON
22	PUCON	Pickup roller clutch drive signal	H:ON
23	COS1ON	Toner cartridge detect signal	L:Present
24	MREQ	System control GA request to send signal	L
25	PFTXD	PFC transmit data signal	-
26	MACK/PF	PFC data terminal ready signal	L
27	PFACK	PFC data set ready signal	L
28	PFREQ	PFC request to send signal	L
29	PFRXD	PFC receive data signal	-
30	DFDS	Paper set pre-registration signal	L
31	OPRSTX	Optional parts reset signal	L
32	FCOSON	Front cover detection signal	H:Open
33	PSS3	Recording cassette detect signal	L:Present
34	SG	Signal ground	-
35	PWRDWN	Not used	-
36	FDS1ON	Feed sensor output signal	H:Feeding
37	LPSON	Pickup detect signal	H:Pickup completed
38	PESON	Paper empty detect signal	H:Empty
39	MMBRK	Main motor brake signal	H:Brake
40	MMDIR	Main motor direction signal	L:CCW H:CW
41	MMFG	Not used	-
42	MMCLK	Main motor clock	-
43	MMSYNC	Main motor synchronized signal	L: Constant speed
44	MMON	Main motor ON/OFF signal	H:ON
45	LUMON1	Tray-up motor drive signal 1	L:OFF H:Forword/Brake
46	MPFCON	SFB clutch ON signal	H
47	MPESON	SFB paper empty detect signal	H:Empty
48	MPSS2ON	SFB paper size detect signal 2	H
49	MPSS0ON	SFB paper size detect signal 0	H
50	MPSS1ON	SFB paper size detect signal 1	H
51	FANDET	Process unit fan motor status signal	-
52	FANH	Process unit / Power supply unit fan motor high speed drive signal	H
53	FANL	Process unit / Power supply unit fan motor low speed drive signal	H
54	PSFANDET	Power supply unit fan motor status signal	-
55	PSFANON	Not used	-
56	SPEAKER	Speaker output signal	-
57	HTON0	Heater lamp 1 ON signal	H
58	HTON1	Heater lamp 2 ON signal	H
59	PWSV	Power save control signal	L
60	5VPS	+5V (When Power saver mode = Supplied)	-
61	3.3V	+3.3V	-
62	3.3V	+3.3V	-
63	3.3V	+3.3V	-
64	SG	Signal ground	-
65	SG	Signal ground	-
66	-12V	-12V	-
67	+12V	+12V	-
68	AG	Analog ground	-
69	+5V	+5V	-
70	+5V	+5V	-
71	OHP	Not used	-
72	SG	Signal ground	-
73	SG	Signal ground	-
74	CCON	Main charger control signal	H
75	DVVR	Development bias reference signal	-
76	TCHON	Transfer charger control signal	H
77	TCVR	Transfer bias reference voltage signal	-
78	GVR	Grid reference voltage signal	-
79	SPON	Separation charger control signal	H
80	SPDVR	Separation bias reference signal	-
81	SG	Signal ground	-
82	PGON	Paper guide plate/Pinch roller control signal	H
83	SG	Signal ground	-
84	BAFANL	Not used	-
85	LUMON2	Tray-up motor drive signal 2	L:OFF/Forword H:Brake
86	PMCLK	Polygonal motor clock	-
87	PMSTS	Polygonal motor status signal	L: Constant speed
88	PMTON	Polygonal motor drive signal	L:ON
89	DELON	Discharge LED array drive signal	H:ON
90	DELRET	Process unit present/absent detect signal	H:Present
91	PUFRET	Process unit new/old detect signal	L:Old H:New
92	PUFDEL	Process unit fuse detect signal	H
93	DTH	Drum thermistor detect signal	-
94	TES	Toner empty sensor drive/detection signal	-
95	OFSET1	OCT motor drive signal 1	H
96	PFCDET	PFC PWA detect signal	L:Connected
97	BAFAN1	Vacuum fan status signal	-
98	BAFANON	Vacuum fan drive signal	H:ON
99	MPSS3ON	SFB paper size detect signal 3	H
100	MCONECT	SFB detect signal	L:Connected

PWA-F-PFC

CN203 PWA-F-PFC (CN203) <-> ADU

Pin No	Symbol	Name	Active
1	FDM-D	ADU motor (Lower) drive signal D	-
2	FDM-B	ADU motor (Lower) drive signal B	-
3	FDM-C	ADU motor (Lower) drive signal C	-
4	FDM-A	ADU motor (Lower) drive signal A	-
5	CRT-DOWNA	Not used	-
6	ADUFL	ADU paper jam sensor (Lower) detect signal	H:Feeding
7	+5V	+5V	-
8	SG	Signal ground	-
9	ADCNT	ADU connect signal	L:Connected
10	ADUFU	ADU paper jam sensor (Upper) detect signal	H:Feeding
11	ADUCOVSW	ADU cover open switch detect signal	H:Open
12	EXM-A	ADU motor (Upper) drive signal A	-
13	EXM-C	ADU motor (Upper) drive signal C	-
14	EXM-B	ADU motor (Upper) drive signal B	-
15	EXM-D	ADU motor (Upper) drive signal D	-

CN204 PWA-F-PFC (CN204) <-> ADU

Pin No	Symbol	Name	Active
1	SG	Signal ground	-
2	SG	Signal ground	-
3	+24V	+24V	-
4	+24V	+24V	-

CN205 PWA-F-PFC (CN205) <-> OCF-SEN/OCF-CLT

Pin No	Symbol	Name	Active
1	SG	Signal ground	-
2	PFUFD-SW	2nd feed roller sensor detect signal	H:Feeding
3	+5V	+5V	-
4	PFUDCLT	2nd feed roller clutch drive signal	L:ON
5	+24V	+24V	-

PWA-F-SLG

CN2 PWA-F-SLG (CN2) <-> INV-EXPO-AT/AW

Pin No	Symbol	Name	Active
1	+24V	+24V	-
2	LAMP	Exposure lamp ON signal	H
3	PG	Power ground	-

CN6 PWA-F-SLG (CN6) <-> ADF/RADF

Pin No	Symbol	Name	Active
1	+24V	+24V	-
2	+24V	+24V	-
3	A	ADF motor phase-A signal/ RADF non connection	-
4	/A	ADF motor phase-/A signal/ RADF non connection	-
5	B	ADF motor phase-B signal/ RADF non connection	-
6	/B	ADF motor phase-/B signal/ RADF non connection	-
7	PG	Power ground	-
8	PG	Power ground	-
9	+5V	+5V	-
10	D/A	ADF read sensor LED adjustment signal/ RADF non connection	-
11	POS	ADF read sensor detect signal/ RADF non connection	L -
12	REGST/ACK	ADF registration sensor detect signal/ Scanner acknowledge signal	L L
13	VALID/DFFAN	ADF non connection/ RADF strobe control signal	- L
14	5VPS	+5V (When Power saver mode = Supplied)	-
15	EMPTY	ADF original empty sensor detect signal/ RADF original empty sensor detect signal	H:Original empty
16	DF_OPN	ADF open sensor detect signal/ RADF non connection	L:ADF open -
17	COVER/RXD	ADF top cover open switch detect signal/ RADF RXD signal	L:ADF top cover open -
18	SG	Signal ground	-
19	WIDTH/TXD	ADF original width sensor/ RADF TXD signal	-
20	SG	Signal ground	-
21	HAISI/DF-ACK	ADF exit sensor detect signal/ RADF acknowledge signal	L:Original feeding -
22	SIZE2/DF-REQ	ADF size sensor detect signal/ RADF request signal	L:Original present -
23	ADF CNT/REQ	ADF connect signal/ Scanner request signal	L:Connected -
24	RADF CNT	ADF non connection/ RADF connect signal	- L:Connected
25	SG	ADF non connection/ RADF Signal ground	-
26	NC	Non connection	-

CN7 PWA-F-SLG(CN7)<->SCN-MOT

Pin No	Symbol	Name	Active
1	SA	Scanner motor phase-A signal	-
2	+24V	+24V	-
3	S/A	Scanner motor phase-/A signal	-
4	SB	Scanner motor phase-B signal	-
5	+24V	+24V	-
6	S/B	Scanner motor phase-/B signal	-

CN8 PWA-F-SLG (CN8) <-> HOME-SEN/ORCOV-SEN

Pin No	Symbol	Name	Active
1	+5V	+5V	-
2	SG	Signal ground	-
3	HPSEN	Home position sensor detect signal	H:Home position
4	+5V	+5V	-
5	SG	Signal ground	-
6	PLSEN	Original cover sensor detect signal	H:Cover close

CN9 PWA-F-SLG (CN9) <-> PWA-F-CCD (CN1)

Pin No	Symbol	Name	Active
1	+12V	+12V	-
2	+12V	+12V	-
3	SGND	Signal ground	-
4	OS1	CCD signal output 1	-
5	SGND	Signal ground	-
6	OS2	CCD signal output 2	-
7	SGND	Signal ground	-
8	CCDCP	CCD cramp gate signal	-
9	SGND	Signal ground	-
10	CCDRS	CCD reset signal	-
11	SGND	Signal ground	-
12	CK1A	CCD transfer clock phase-1 signal	-
13	SGND	Signal ground	-
14	CK2B	CCD transfer final signal	-
15	SGND	Signal ground	-
16	CK2A	CCD transfer clock phase-2 signal	-
17	SGND	Signal ground	-
18	CCDSH	CCD shift gate signal	-
19	+5V	+5V	-
20	+5V	+5V	-

CN13 PWA-F-SLG (CN13) <-> APS-1/2/3/4

Pin No	Symbol	Name	Active
1	+5V	+5V	-
2	SENS1	APS sensor 1 detect signal	H
3	SG	Signal ground	-
4	+5V	+5V	-
5	SENS2	APS sensor 2 detect signal	H
6	SG	Signal ground	-
7	+5V	+5V	-
8	SENS3	APS sensor 3 detect signal	H
9	SG	Signal ground	-
10	+5V	+5V	-
11	SENS4	APS sensor 4 detect signal	H
12	SG	Signal ground	-

CN14 PWA-F-SLG (CN14) <-> APS-5/6

Pin No	Symbol	Name	Active
1	+5V	+5V	-
2	SENS5	APS sensor 5 detect signal	H
3	SG	Signal ground	-
4	+5V	+5V	-
5	SENS6	APS sensor 6 detect signal	H
6	SG	Signal ground	-

PS-LVPS-US/EU-AT/AW

CN5 PS-LVPS-US/EU-AT/AW (CN5) <-> SIIL-SW/FRIL-SW

Pin No	Symbol	Name	Active
1	C/O-IN	Cover open interlock switch input voltage (+24V to Front/Side cover interlock switches)	-
2	C/O-OU	Cover open interlock switch output voltage (+24V from Front/Side cover interlock switches)	-

PWA-F-RLY

CN23 PWA-F-RLY (CN23) <-> PS-LVPS-US/EU-AW (CN6)

Pin No	Symbol	Name	Active
1	HT1ON	Heater lamp 1 ON signal	L
2	3.3V	+3.3V	-
3	+5V	+5V	-
4	5VPS	+5V (When Power saver mode = Supplied)	-
5	+12V	+12V	-
6	-12V	-12V	-
7	+24V	+24V	-
8	PG	Power ground	-
9	VM	+24V (When Front/Side cove open = cut off)	-
10	PG	Power ground	-
11	HT2ON	Heater lamp 2 ON signal	L
12	PWS	Power save control signal	L
13	SG	Signal ground	-
14	SG	Signal ground	-
15	SG	Signal ground	-
16	AG	Analog ground	-
17	24VF1	+24V (for Scanner unit)	-
18	PG	Power ground	-
19	PG	Power ground	-
20	24VF2	+24V (for Finisher)	-

CN24 PWA-F-RLY (CN24) <-> PS-HVPS

Pin No	Symbol	Name	Active
1	CCON	Main charger control signal	H
2	DVVR	Development bias reference signal	-
3	TCON	Transfer charger control signal	H
4	TCVR	Transfer bias reference voltage signal	-
5	VM	+24V(When Front/Side cove open = cut off)	-
6	PG	Power ground	-
7	GVR	Grid reference voltage signal	-
8	SPON	Separation charger control signal	H
9	SPVR	Separation bias reference signal	-
10	PGON	Paper guide plate/Pinch roller control signal	H

CN26 PWA-F-RLY (CN26) <-> PWA-PDV (CN168)

Pin No	Symbol	Name	Active
1	+24V	+24V	-
2	PG	Power ground	-
3	/START	Polygonal motor drive signal	H:ON
4	/READY	Polygonal motor status signal	L: Constant speed
5	CLK	Polygonal motor clock	-

CN27 PWA-F-RLY (CN27) <-> TNR-SEN (In Process unit)

Pin No	Symbol	Name	Active
1	+5V	+5V	-
2	DTHA	Not used	-
3	TES	Toner empty sensor drive/detection signal	-
4	SG	Signal ground	-

CN28 PWA-F-RLY (CN28) <-> MD-MOT-AT/AW

Pin No	Symbol	Name	Active
1	VM	+24V (When Front/Side cove open = cut off)	-
2	PG	Power ground	-
3	PG	Power ground	-
4	VM	+24V (When Front/Side cove open = cut off)	-
5	VM	+24V (When Front/Side cove open = cut off)	-

CN29 PWA-F-RLY (CN29) <-> MD-MOT-AT

Pin No	Symbol	Name	Active
1	MMTR-ON	Main motor ON/OFF signal	L:ON
2	NC	Non connection	-
3	MMTR-RFL	Main motor clock	-
4	PLL-OK	Main motor synchronized signal	L: Constant speed
5	SG	Signal ground	-
6	+5V	+5V	-

CN30 PWA-F-RLY (CN30) <-> MD-MOT-AW

Pin No	Symbol	Name	Active
1	MMTR-ON	Main motor ON/OFF signal	L:ON
2	MMTR-BRK	Non connection	-
3	MMTR-RFL	Main motor clock	-
4	PLL-OK	Main motor synchronized signal	L: Constant speed
5	SG	Signal ground	-
6	+5V	+5V	-
7	MMTR-DIR	Main motor direction signal	L:CW H:CCW
8	MMTR-FG	Not used	-

CN31 PWA-F-RLY (CN31) <-> SFB

Pin No	Symbol	Name	Active
1	SG	Signal ground	-
2	MPFCON	SFB clutch ON signal (+24V)	H
3	+24V	+24V	-
4	SG	Signal ground	-
5	MPESON	SFB paper empty detect signal	H:Empty
6	+5V	+5V	-
7	MPSS3ON	SFB paper size detect signal 3	H
8	MPSS2ON	SFB paper size detect signal 2	H
9	MPSS1ON	SFB paper size detect signal 1	H
10	MPSS0ON	SFB paper size detect signal 0	H
11	SG	Signal ground	-
12	MCONECT	SFB detect signal	L:Connected

CN32 PWA-F-RLY (CN32) <-> TC-SW

Pin No	Symbol	Name	Active
1	COS1ON	Toner cartridge detect signal	L:Present
2	SG	Signal ground	-

CN33 PWA-F-RLY (CN33) <-> FED-SEN

Pin No	Symbol	Name	Active
1	SG	Signal ground	-
2	FDS1ON	Feed sensor output signal	H:Feeding
3	+5V	+5V	-
4	SG	Signal ground	-
5	DHPON	Not used	-
6	+5V	+5V	-

CN34 PWA-F-RLY (CN34) <-> VCM-FAN

Pin No	Symbol	Name	Active
1	FANH	Vacuum fan drive voltage	-
2	FANL	Vacuum fan status signal	-

CN35 PWA-F-RLY (CN35) <-> PWA-PFC (CN202)

Pin No	Symbol	Name	Active
1	+24V	+24V	-
2	+24V	+24V	-
3	PG	Power ground	-
4	PG	Power ground	-
5	+5V	+5V	-
6	SG	Signal ground	-

CN36 PWA-F-RLY (CN36) <-> PWA-PFC (CN201)

Pin No	Symbol	Name	Active
1	PFCDET	PFC PWA detect signal	L:Connected
2	SG	Signal ground	-
3	24VCHK	Interlock switch detect signal	L:Front/Side cover open
4	PFCRST	Optional parts reset signal	L
5	RSTPR	Paper set pre-registration signal	L
6	RGTST	Registration roller clutch drive signal	H:ON
7	EXIT/SW	Exit sensor output signal	H:Feeding
8	PSTP/1	Feed sensor output signal	H:Feeding
9	PFRXD	PFC receive data signal	-
10	PFREQ	PFC request to send signal	L
11	PFACK	PFC data set ready signal	L
12	MACK/PF	PFC data terminal ready signal	L
13	PFTXD	PFC transmit data signal	-
14	MREQ/PF	System control GA request to send signal	L

CN37 PWA-F-RLY (CN37) <-> T-UP-SEN/PE-SEN/PU-CLT/T-UP-MOT/RGST-CLT

Pin No	Symbol	Name	Active
1	SG	Signal ground	-
2	+24V	+24V	-
3	LPSON	Pickup detect signal	H:Pickup completed
4	PUCON	Pickup roller clutch drive voltage (+24V)	-
5	+5V	+5V	-
6	LUMON	Tray-up motor drive voltage (+24V)	-
7	SG	Signal ground	-
8	+24V	Tray-up motor drive reverse voltage (PG)	-
9	PESON	Paper empty detect signal	H:Empty
10	+24V	+24V	-
11	+5V	+5V	-
12	PRCON	Registration roller clutch drive voltage (+24V)	-

CN38 PWA-F-RLY (CN38) <-> CST-SW

Pin No	Symbol	Name	Active
1	NC	Non connection	-
2	CASSETTE	Recording cassette detect signal	L:Present
3	SG	Signal ground	-

CN39 PWA-F-RLY (CN39) <-> TS-MOT

Pin No	Symbol	Name	Active
1	VM	+24V (When Front/Side cove open = cut off)	-
2	TSMON	Toner supply motor drive signal	H:ON
3	NC	Non connection	-

CN41 PWA-F-RLY (CN41) <-> JSP/OCT/Bridge cover (Finisher)

Pin No	Symbol	Name	Active
1	OFFSET2	OCT motor drive signal 2	H
2	OFFSET1	OCT motor drive signal 1	-
3	PG	Power ground	-
4	+24V	+24V	-
5	JSSON	JSP/Bridge cover solenoid drive voltage (+24V)	-
6	JFLS2ON	JSP stack sensor (Upper) detect signal / OCT separate sensor detect signal	H:Paper full H:Initial position
7	JOB/JAM	JSP paper jam sensor detect signal / OCT paper jam sensor detect signal / Bridge cover paper jam sensor detect signal	H:Paper jam
8	JCOSON	JSP cover open switch detect signal / OCT cover open switch detect signal / Bridge cover relay cover open switch detect signal	H:Cover open
9	JOB/SW	JSP/OCT distinction signal	L:JSP H:OCT
10	F/SELECT	Finisher detection signal	L:Connected
11	JCONECT	JSP/OCT/Finisher detection signal	L:Connected
12	SG	Signal ground	-
13	FLS1ON	JSP stack sensor (Lower) detect signal / OCT stack sensor detect signal / Bridge cover stack sensor detect signal	H:Paper full
14	+5V	+5V	-
15	JPOSON	Bridge cover exit sensor detect signal	H:Present

CN42 PWA-F-RLY (CN42) <-> Coin vendor

Pin No	Symbol	Name	Active
1	+24V	+24V	-
2	ON	Coin vendor ON/OFF control signal	-
3	PG	Power ground	-

CN44 PWA-F-RLY (CN44) <-> HEA1-THM/HEA2-THM

Pin No	Symbol	Name	Active
1	CHK	Heater thermistor connect check voltage (+3.3V)	-
2	+5V	+5V	-
3	ATH1	Heater thermistor 1 detect signal	-
4	+5V	+5V	-
5	ATH2	Heater thermistor 2 detect signal	-
6	THCHK	Heater thermistor connect detect voltage (+3.3V:Connected)	-

CN45 PWA-F-RLY (CN45) <-> EXT-SEN

Pin No	Symbol	Name	Active
1	SG	Signal ground	-
2	FDS2ON	Exit sensor output signal	H:Feeding
3	FDSLED	Exit sensor LED illuminate voltage (+5V)	-

CN47 PWA-F-RLY (CN47) <-> Speaker

Pin No	Symbol	Name	Active
1	SP+	Speaker signal (+)	-
2	SP-	Speaker signal (-)	-

CN48 PWA-F-RLY (CN48) <-> PWA-IPC (Finisher)

Pin No	Symbol	Name	Active
1	24VF2	+24V (for Finisher)	-
2	PG	Power ground	-
3	SG	Signal ground	-
4	+5V	+5V	-

CN49 PWA-F-RLY (CN49) <-> PWA-F-SLG (CN5)

Pin No	Symbol	Name	Active
1	24VF1	+24V (for Scanner unit)	-
2	24VF1	+24V (for Scanner unit)	-
3	PG	Power ground	-
4	PG	Power ground	-

CN50 PWA-F-RLY (CN50) <-> POW-FAN/PU-FAN

Pin No	Symbol	Name	Active
1	FANH	Power supply unit fan motor drive signal	-
2	FANL	Power supply unit fan motor status signal	-
3	FANH	Process unit drive signal	-
4	FANL	Process unit fan motor status signal	-

CN52 PWA-F-RLY (CN52) <-> FRCOV-SW

Pin No	Symbol	Name	Active
1	SG	Signal ground	-
2	FCOSON	Front cover detection signal	H:Open

CN53 PWA-F-RLY (CN53) <-> DRM-THM

Pin No	Symbol	Name	Active
1	+5V	+5V	-
2	DTHA	Drum thermistor detect signal	-

CN54 PWA-F-RLY (CN54) <-> PWA-F-DLE (In Process unit)

Pin No	Symbol	Name	Active
1	+24V	+24V	-
2	DEL	Discharge LED array drive signal	L:ON
3	PUF	Process unit detect voltage (+24V:New PG:Old)	-

CN206 PWA-F-PFC (CN206) <-> PFP/LCF

Pin No	Symbol	Name	Active
A1	NC	Non connection	-
A2	CLK-C	PFP/LCF DRV register control signal C	-
A3	CLK-B	PFP DRV register control signal B	-
A4	SCSW-C	PFP/LCF switch select signal C	L
A5	DRV7	PFP/LCF driver control bus 7	-
A6	DRV6	PFP/LCF driver control bus 6	-
A7	DRV5	PFP/LCF driver control bus 5	-
A8	DRV4	PFP/LCF driver control bus 4	-
A9	DRV3	PFP/LCF driver control bus 3	-
A10	DRV2	PFP/LCF driver control bus 2	-
A11	DRV1	PFP/LCF driver control bus 1	-
A12	DRV0	PFP/LCF driver control bus 0	-
A13	PFPRST	PFP/LCF reset signal	L
A14	+5V	+5V	-
A15	SG	Signal ground	-
B1	SIZE-0	PFP cassette (Upper/Lower) switch detect signal/ LCF cassette switch detect signal	L:Present
B2	SIZE-1	Not used	-
B3	SIZE-2	Not used	-
B4	SIZE-3	Not used	-
B5	RETS-0	PFP/LCF input interface bus 0	-
B6	RETS-1	PFP/LCF input interface bus 1	-
B7	RETS-2	PFP/LCF input interface bus 2	-
B8	RETS-3	PFP/LCF input interface bus 3	-
B9	RETS-4	PFP/LCF input interface bus 4	-
B10	RETS-5	PFP/LCF input interface bus 5	-
B11	RETS-6	PFP/LCF input interface bus 6	-
B12	RETS-7	PFP/LCF input interface bus 7	-
B13	SCSW-B	PFP/LCF switch select signal B	L
B14	NC	Non connection	-
B15	LCFCNT	LCF connect signal	L:Connected

CN207 PWA-F-PFC (CN207) <-> PFP/LCF

Pin No	Symbol	Name	Active
1	+24V	+24V	-
2	+24V	+24V	-
3	PG	Power ground	-
4	PG	Power ground	-

CN208 PWA-F-PFC (CN208) <-> PFU

Pin No	Symbol	Name	Active
A1	SG	Signal ground	-
A2	PFUPEMP	PFU paper empty sensor detect signal	H:Empty
A3	+5V	+5V	-
A4	SG	Signal ground	-
A5	PFUTUP	PFU pickup sensor detect signal	H:Pickup completed
A6	+5V	+5V	-
A7	PFUPCLT	PFU pickup clutch drive signal	L:ON
A8	+24V	+24V	-
A9	+5V	+5V	-
A10	SIZPFU1	Not used	-
A11	SG	Signal ground	-
B1	PFUCNT	PFU connect signal	L:Connected
B2	NC	Non connection	-
B3	SIZUPFU0	PFU cassette switch detect signal	L:Present
B4	SG	Signal ground	-
B5	PFUCOV	PFU cover open switch detect signal	H:Open
B6	SG	Signal ground	-
B7	NC	Non connection	-
B8	PFUTRM-A	PFU tray-up motor drive signal A	L:OFF/Forword H:Brake
B9	PFUTRM-B	PFU tray-up motor drive signal B	L:OFF H:Forword/Brake
B10	NC	Non connection	-
B11	SG	Signal ground	

APPENDIX

Appendix A. Specifications

- Copy process ..... Indirect electrophotographic process (dry)
- Type ..... Desktop type (console type when the paper feed pedestal and Large capacity feeder are installed)
- Original table ..... Fixed table (the left rear corner used for standard original placement)
- Acceptable originals ..... Type: sheet, book, and 3-dimensional object.
  However, the automatic document feeder (option) only accepts sheets of paper (Multi-sheet: 50 - 105 g/m^2, or 13 - 29 lb/Single-sheet: 105 - 127 g/m^2, or 29 - 34 lb.), excluding carbon paper, pasted sheets and stapled sheets.
  Max size: A3/LD

- Copy speed

e-STUDIO160 series (Copies/min.)

Paper supply / Paper size	Upper cassette	PFU	PFP		LCF	Bypass feeding (SFB)	
			Upper cassette	Lower cassette (with CM)		No paper size designated	Paper size designated
A4, LT	16	16	16	-	-	9	16
A4-R	12	12	12	-	-	9	12
LT-R	13	13	13	-	-	9	13
B4	11	11	11	-	-	9	11
LG	11	11	11	-	-	9	11
A3, LD	9	9	9	-	-	9	9

e-STUDIO200 series (Copies/min.)

Paper supply / Paper size	Upper cassette	PFU	PFP		LCF	Bypass feeding (SFB)	
			Upper cassette	Lower cassette (with CM)		No paper size designated	Paper size designated
A4, LT	20	20	20	20	20	12	20
A4-R	16	16	16	16	-	12	16
LT-R	16	16	16	16	-	12	16
B4	14	14	14	14	-	12	14
LG	14	14	14	14	-	12	14
A3, LD	12	12	12	12	-	12	12

e-STUDIO250 series (Copies/min.)

Paper supply / Paper size	Upper cassette	PFU	PFP		LCF	Bypass feeding (SFB)	
			Upper cassette	Lower cassette (with CM)		No paper size designated	Paper size designated
A4, LT	24.6	24.6	24.6	24.6	24.6	14	24.6
A4-R	19	19	19	19	-	14	19
LT-R	20	20	20	20	-	14	20
B4	16	16	16	16	-	14	16
LG	16	16	16	16	-	14	16
A3, LD	14	14	14	14	-	14	14

* "-" shows "Cannot be used".
* The copy speeds in the above table are available when originals are manually placed for single-side, multiple copying.

• System copy speed (Copies/min.)

Copy mode		e-STUDIO160 series	e-STUDIO200 series	e-STUDIO250 series
Single-sided originals ↓ Single-sided copies (Non sort)	1 set	12	15	15
	3 sets	14	17	19
	5 sets	15	18	21
Single-sided originals ↓ Two-sided copies (Sort)	1 set	5	6	6
	3 sets	8	10	11
	5 sets	9	12	13
Two-sided originals ↓ Single-sided copies (Sort)	1 set	6	7	7
	3 sets	10	12	14
	5 sets	12	14	17
Two-sided originals ↓ Two-sided copies (Sort)	1 set	5	6	6
	3 sets	8	11	11
	5 sets	10	12	13

* Copy speeds include the first copy time.
  They are available when the copy modes in the above table are selected and 10 LT-size originals are set in the automatic document feeder.

• Copy paper

	Cassette	Duplexing	Bypass copy	Remarks
Size	A3 - A5-R, FOLIO LD - ST-R, COM		A3 - A5-R, FOLIO LD - ST-R, COM	
Weight	64 - 80 g/m^2 17 - 21 lbs		Continuous copy: 64 - 80 g/m^2, 17 - 21 lbs Single copy: 80 - 163 g/m^2, 21 - 43 lbs	
Special paper	—	—	Recommended OHP film/Thick paper	

- First copy time ..... e-STUDIO160 series: Less than 7.9 seconds (A4/LT, the Upper cassette, 100%, original placed manually)
  e-STUDIO200 series: Less than 7.0 seconds (A4/LT, the Upper cassette, 100%, original placed manually)
  e-STUDIO250 series: Less than 7.0 seconds (A4/LT, the Upper cassette, 100%, original placed manually)
- Warming-up time ..... e-STUDIO160 series: Less than 60 seconds
  e-STUDIO200 series: Less than 75 seconds
  e-STUDIO250 series: Less than 75 seconds
- Multiple copying ..... Up to 999 copies; entry by numeric keys
- Reproduction ratio ..... Actual ratio: 100%
  Zooming: 50 - 200% in increments of 1%
  25 - 400% in increments of 1%
  (for e-STUDIO200/250 series; with original cover)
- Resolution/Gradation ..... Read: 600 dpi x 600 dpi
  Copy: 600 dpi x 600 dpi
  Printer: 1200 dpi x 600 dpi
  Fax: 16 dot/mm x 15.4 dot/mm (406 dpi x 392 dpi)
- Paper feeding ..... Automatic feeding: Copier's cassette 1 piece standard
  e-STUDIO160 series: Expandable up to 3 pieces by installing optional cassettes.
  e-STUDIO200/250 series: Expandable up to 4 pieces by installing optional cassettes.
  PFU-optional (Stack height 60.5 mm, Equivalent to 550 sheets; 64 to 80 g/m^2 (17 to 21 lb.))
  PFP-optional (Stack height 60.5 mm, Equivalent to 550 sheets; 64 to 80 g/m^2 (17 to 21 lb.))
  LCF-optional (Stack height 165 mm, Equivalent to 1250 x 2 sheets; 64 to 80 g/m^2 (17 to 21 lb.))
  Bypass feeding (Stack height 16 mm, Equivalent to 100 sheets; 64 to 80 g/m^2 (17 to 21 lb.))
- Capacity of originals of automatic document feeder .. A4, A4-R, B5, B5-R, A5-R, LT, LT-R, ST-R: 50 sheets (with ADF)
  B4, Folio, LG, Comp, A3, LD: 50 sheets (with ADF)
  A4, A4-R, B5, B5-R, A5-R, LT, LT-R, ST-R: 100 sheets (with RADF)
  B4, Folio, LG, Comp, A3, LD: 100 sheets (with RADF)
- Toner supplying ..... Automatic toner sensor detection
- Density control ..... Automatic density mode and manual density mode selectable in 7 steps

- Weight ..... Standard: 50 Kg (110 lb.) (with Process unit/Toner cartridge)
  Full system: 92 Kg (203 lb.) (e-STUDIO160 series)/
  124 Kg (273 lb.) (e-STUDIO200/250 series)
- Power requirements 115VAC, 50Hz/60Hz
  120VAC, 50Hz/60Hz
  127VAC, 50Hz/60Hz
  220-240VAC, 50Hz/60Hz
- Power consumption ..... 1.4 KW or less
- Dimensions: ..... (W) x (D) x (H) mm

	e-STUDIO160 series	e-STUDIO200/250 series
Standard	530 x 554 x 600 mm	530 x 554 x 600 mm
Standard + Original cover	530 x 554 x 643 mm	530 x 554 x 643 mm
Standard + ADF	530 x 554 x 731 mm	530 x 554 x 731 mm
Standard + RADF	545 x 599 x 772 mm	545 x 599 x 772 mm
Standard + ADU + RADF	607 x 599 x 772 mm	607 x 599 x 772 mm
Standard + Original cover + PFU	530 x 554 x 757 mm	530 x 554 x 757 mm
Standard + Original cover + PFU + PFP	530 x 554 x 1039 mm	530 x 554 x 1039 mm
Standard + Original cover + JSP	604 x 554 x 643 mm	604 x 554 x 643 mm
Standard + Original cover + SFB	801 x 554 x 643 mm	801 x 554 x 643 mm
Standard + Original cover + OCT	604 x 554 x 643 mm	604 x 554 x 643 mm
Standard + Original cover + Stapler	787 x 554 x 676 mm	787 x 554 x 676 mm
Standard + Original cover + Finisher	-----	957 x 554 x 643 mm

e-STUDIO160 series

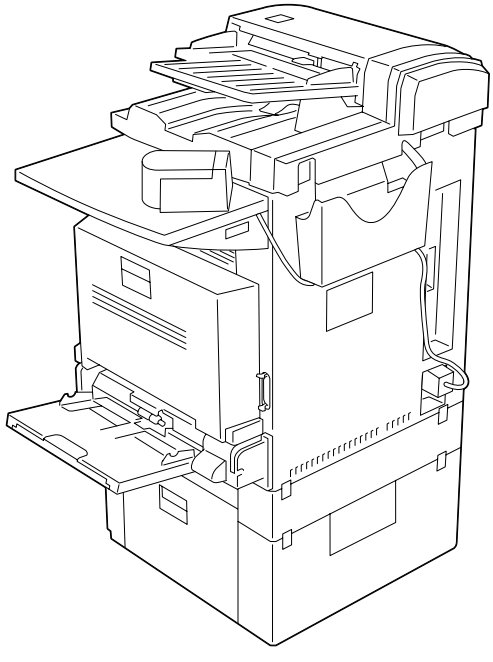

03-3

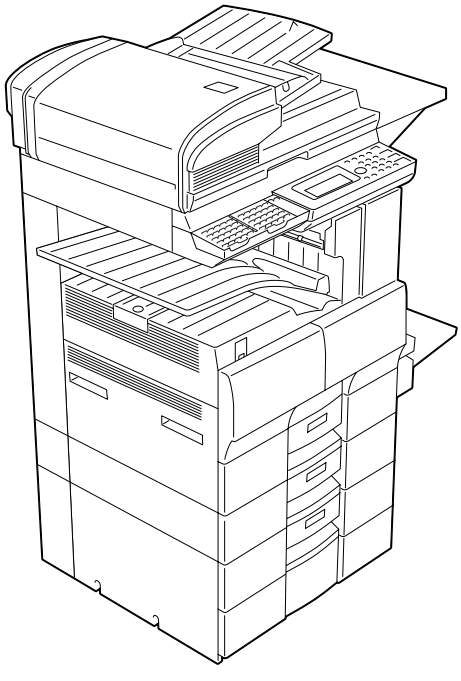

03-4

e-STUDIO200/250 series

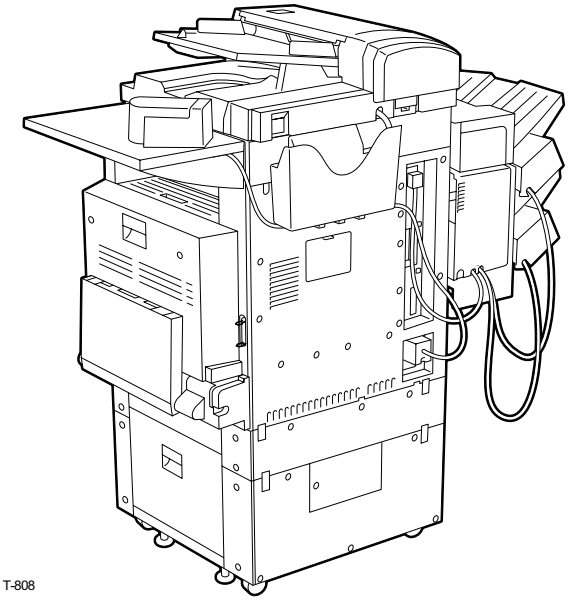

T-808

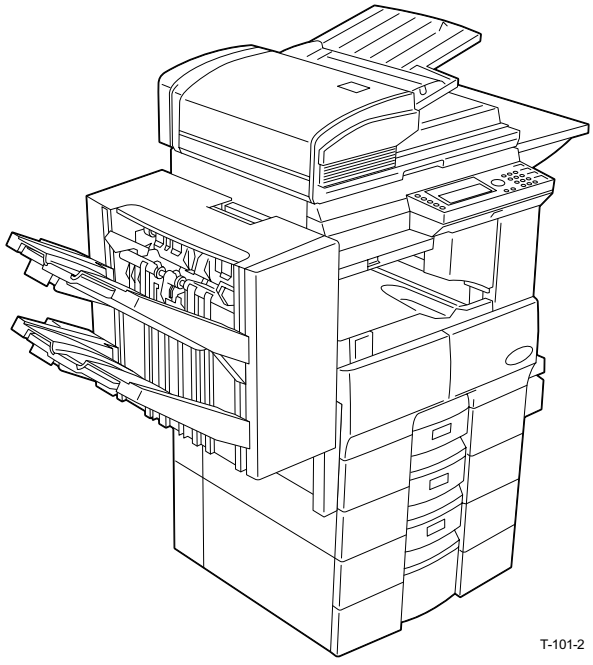

T-101-2

Appendix B. Accessories

Setup instructions	1pc.
Operator's manual	1pc.
Setup report	1pc. (for NAD and MJD)
Warranty sheet	1pc. (for NAD)
CS card	1pc. (for MJD)
Process unit	1pc.
Toner cartridge	1pc.
Detouchable power cord	1pc.

* Machine version

NAD: North America

MJD: Europe

AUD: Australia

ASD: Asia

SAD: Saudi Arabia

CND: China

Appendix C. Options

Original cover	KA-1600PC, KA-1600PC-N
Paper feed pedestal-1 (PFP)	KD-1009, KD-1009-N
Automatic duplexing unit-1(ADU)	MD-0101, MD-0101-N
Automatic document feeder (ADF)	MR-2012, MR-2012-N
Reverse automatic document feeder-1 (RADF)	MR-3011
Paper feed unit (PFU)	MY-1015, MY-1015-N
Cassette module (CM)	MY-1017, MY-1017-N (for e-STUDIO200/250 series)
Large capacity feeder (LCF)	KD-1010, KD-1010-N (for e-STUDIO200/250 series)
Paper feed controller (PFC)	GH-1030, GH-1030-N
Job separator (JSP)	MJ-5001, MJ-5001-N
Offset tray	MJ-5002, MJ-5002-N
Stack feed bypass (SFB)	MY-1016, MY-1016-N
Printer kit (Printer control)	GA-1031
Memory kit	GC-1050, GC-1050-N
Fax board kit	GD-1061-EU, GD-1061-NA, GD-1061-AU, GD-1060-SA, GD-1061C
Internet fax kit	GD-1070
NIC kit (Network interface card)	GF-1110
Staple with surface	KK-1600
Finisher	MJ-1011 (for e-STUDIO200/250 series)

Appendix D. Replacement Units/Supplies

(1) Replacement units

Fuser unit	FUSER-1600-120, FUSER-1600-240 (for e-STUDIO160 series)
	FUSER-2500-120, FUSER-2500-240 (for e-STUDIO200/250 series)
Transfer charger unit	MAIN-CH-1600

(2) Process unit

Process unit	PU-1610S, PU-1610ES, PU-1610DS, PU-1610DSN, PU-1610CS

(3) Supplies

Toner cartridge	T-1600, T-1600E, T-1600D, T-1600C (for e-STUDIO160 series)
	T-2500, T-2500E, T-2500D, T-2500C (for e-STUDIO200/250 series)

Appendix E. System List

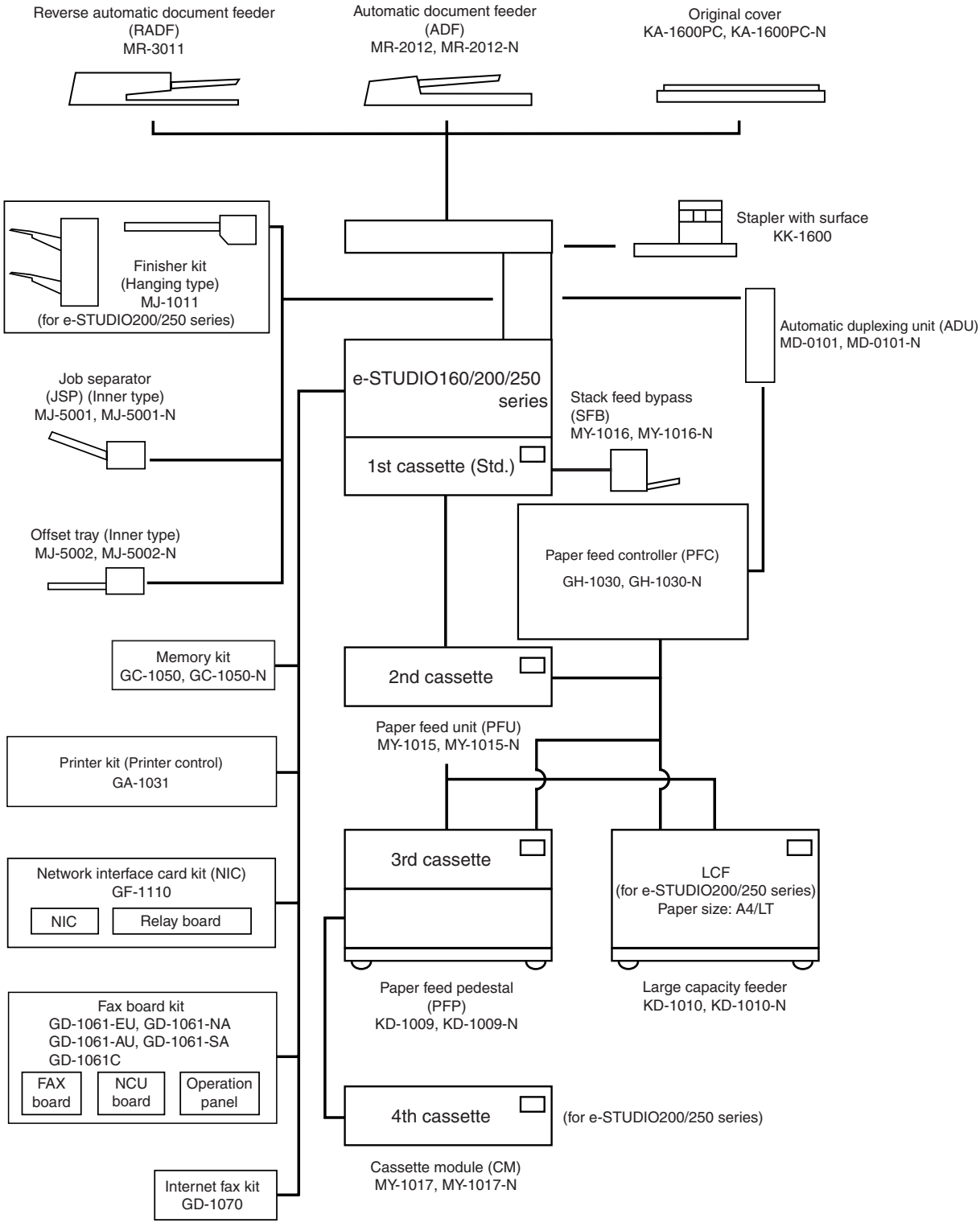

Fig. E-1

Appendix F. Power Supply Unit

1. Outline

The power supply unit provides AC and DC power for each part of this machine. The unit is made up of the following circuits.

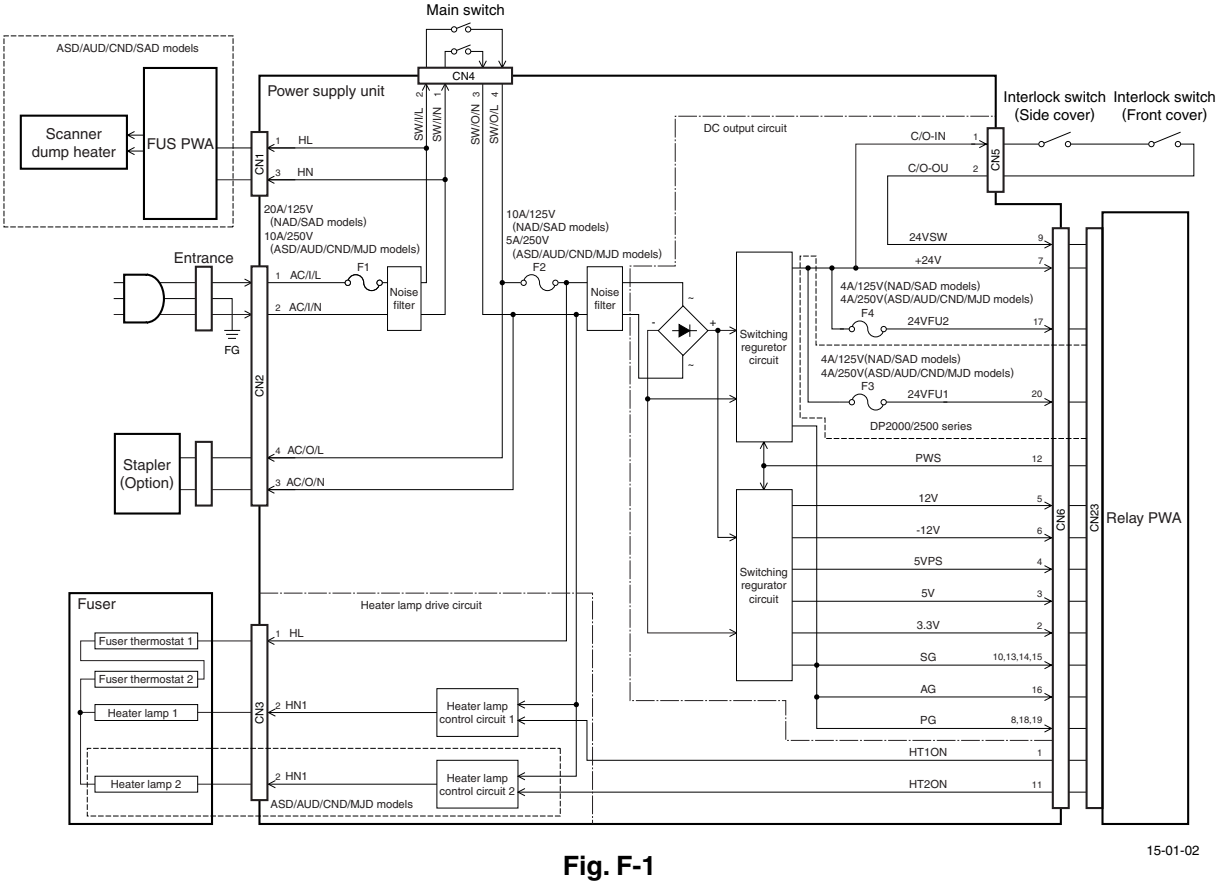

Fig. F-1

2. DC Output Circuit

This circuit converts the AC voltage input from the inlet to each DC voltage (+24V, +12V, -12V, +5V, +3.3V) and delivers it to each part of the machine. Turning on the main switch causes the supply of all DC voltages to begin.

Each DC voltage is supplied or cut off when the Power Save mode is activated or the following covers are opened or closed as shown in the table below.

DC Voltage	Voltage Value (V)	In Power Save mode (PWS signal = Low)	Front Cover = Open	Side Cover = Open
24VSW	+24	-	-	-
24VFU2	+24	-	○	○
24VFU1	+24	-	○	○
24V	+24	-	○	○
12V	+12	-	○	○
-12V	-12	-	○	○
5VPS	+5	○	○	○
5V	+5	-	○	○
3.3V	+3.3	-	○	○

○ : Output - : Cut off

Output Protection

An overcurrent and an overvoltage protective circuit are configured for each DC voltage output. If the output is shorted for some reason or an abnormal condition occurs in a circuit, these circuits prevent overcurrent and overvoltage from flowing through the entire circuitry of this machine.

TOSHIBA

TOSHIBA TEC CORPORATION
1-1, KANDA NISHIKI-CHO, CHIYODA-KU, TOKYO, 101-8842 JAPAN