TOSHIBA

SERVICE MANUAL

MULTIFUNCTIONAL DIGITAL COLOR SYSTEMS

e-STUDIO4500c/5500c



File No. SME060023C0
R060621C2200-TTEC
Ver03_2007-04

Downloaded from www.Manualslib.com manuals search engine

TRADEMARKS

- The official name of Windows 95 is Microsoft Windows 95 Operating System.
- The official name of Windows 98 is Microsoft Windows 98 Operating System.
- The official name of Windows Me is Microsoft Windows Millennium Edition Operating System.
- The official name of Windows 2000 is Microsoft Windows 2000 Operating System.
- The official name of Windows XP is Microsoft Windows XP Operating System.
- Microsoft, Windows, Windows NT and the brand names and product names of other Microsoft products are trademarks or registered trademarks of Microsoft Corporation in the U.S. and/or other countries.
- Apple, AppleTalk, Macintosh, and Mac are trademarks of Apple Computer, Inc. in the U.S. and other countries.
- PostScript is a trademark of Adobe Systems Incorporated.
- NOVELL, NetWare, and NDS are trademarks or registered trademarks of Novell, Inc.
- Ricoh Corporation or other company names and product names in this manual are the trademarks of their respective companies.

© 2006 TOSHIBA TEC CORPORATION All rights reserved

Under the copyright laws, this manual cannot be reproduced in any form without prior written permission of TOSHIBA TEC CORPORATION. No patent liability is assumed, however, with respect to the use of the information contained herein.

Downloaded from www.Manualslib.com manuals search engine

1. CONVENTIONS

Conventions Used in this Manual

This manual uses several symbols.

Symbol	What it means
☛	Refer to section number
CT	See Core Tech Manual for details
	Screw
	Connector
	E-ring
	Clip ring
	Clamp

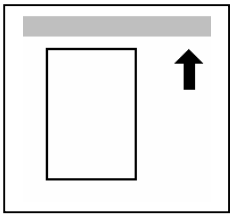

Lengthwise, SEF
(Short Edge Feed)

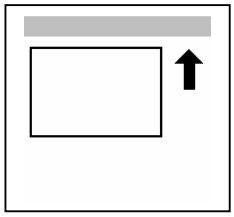

Sideways, LEF
(Long Edge Feed)

Cautions, Notes, etc.

The following headings provide special information:

⚠WARNING

FAILURE TO OBEY WARNING INFORMATION COULD RESULT IN SERIOUS INJURY OR DEATH.

⚠CAUTION

Obey these guidelines to ensure safe operation and prevent minor injuries.

Important

- Obey these guidelines to avoid problems such as misfeeds, damage to originals, loss of valuable data and to prevent damage to the machine.

IMPORTANT

- **ALWAYS OBEY THESE GUIDELINES TO AVOID SERIOUS PROBLEMS SUCH AS MISFEEDS, DAMAGE TO ORIGINALS, LOSS OF VALUABLE DATA AND TO PREVENT DAMAGE TO THE MACHINE. BOLD IS ADDED FOR EMPHASIS.**

NOTE: This information provides tips and advice about how to best service the machine.

Downloaded from www.Manualslib.com manuals search engine

Commonly Used Terms

In the SP tables, the finishers are referred to by number, and some devices that appear in the SP tables are not supported overseas:

Finisher 1	3000/2000-Sheet Finisher B700/B701. The B700 supports corner stapling, booklet stapling and booklet folding. The B701 supports corner stapling only.
Finisher 2	3000-Sheet Finisher B706.
Z-Fold	This refers to the Z-Folding unit. The copier does not support this peripheral device at this time. Please ignore references to "Z-Fold" in the SP tables.
QL	Quenching Lamp
ITB	Image Transfer Belt
PTR	Paper Transfer Roller
PCU	Photoconductor Unit
IDU	Image Discrimination Unit
SBU	Sensor Board Unit
NIB	Network Interface Board
STC	Soft Toner Cartridge
TD	Toner Density
ADS	Auto image Density Selection
M/A	Mass per Area
MUSIC	Mirror Unit Skew Interval Correction
DFU	Design or Factory Use (Denote: Do not change the value.)
EM	Emergency Maintenance

Downloaded from www.Manualslib.com manuals search engine

2. GENERAL SAFETY INSTRUCTIONS

For your safety, please read this manual carefully before you use this product. Keep this manual handy for future reference.

Safety Information

Always obey the following safety precautions when using this product.

Safety During Operation

In this manual, the following important symbols and notations are used.

> **⚠ WARNING**
> A Warning indicates a potentially hazardous situation. Failure to obey a Warning could result in death or serious injury.

> **⚠CAUTION**
> A Caution indicates a potentially hazardous situation. Failure to obey a Caution could result in minor or moderate injury or damage to the machine or other property.

Switches and Symbols

Where symbols are used on or near switches on machines for Europe and other areas, the meaning of each symbol conforms with IEC60417.

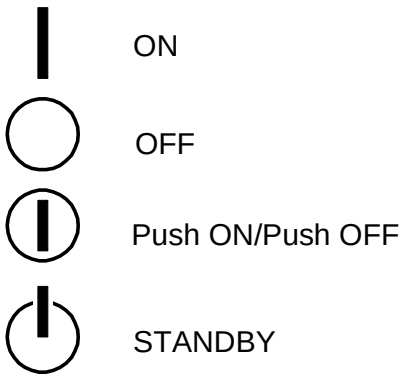

SAFE-SYM.WMF

Downloaded from www.Manualslib.com manuals search engine

2.1 RESPONSIBILITIES OF THE SERVICE ENGINEER

2.1.1 SERVICE ENGINEER

Maintenance shall be done only by trained service engineers who have completed service training for the machine and all optional devices designed for use with the machine.

2.1.2 REFERENCE MATERIAL FOR MAINTENANCE

Maintenance shall be done using the special tools and procedures prescribed for maintenance of the machine described in the reference materials (service manuals, technical bulletins, operating instructions, and safety guidelines for service engineers).

In regard to other safety issues not described in this document, all service engineers shall strictly obey procedures and recommendations described the “CE Safety Guide”.

Use only consumable supplies and replacement parts designed for use of the machine.

Downloaded from www.Manualslib.com manuals search engine

2.2 BEFORE INSTALLATION, MAINTENANCE

2.2.1 SHIPPING AND MOVING THE MACHINE

⚠CAUTION

1. Work carefully when lifting or moving the machine. If the machine is heavy, two or more service engineers may be required to prevent injuries (muscle strains, spinal injuries, etc.) or damage to the machine if it is dropped or tipped over.
2. Personnel moving or working around the machine should always wear proper clothing and footwear. Never wear loose fitting clothing or accessories (neckties, loose sweaters, bracelets, etc.) or casual footwear (slippers, sandals, etc.) when lifting or moving the machine.
3. Always unplug the power cord from the power source before you move the product. Before you move the product, arrange the power cord so it will not fall under the product.
4. Be sure not to hold the movable parts or units (e.g. the doors, ARDF) when transporting the copier.
5. The copier is quite heavy and weighs approximately 298 kg (655.6 lb.), therefore pay full attention when handling it.
6. When transporting/installing the equipment, employ four persons.

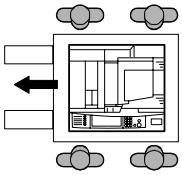

2.2.2 POWER

Warning

1. Always disconnect the power plug before doing any maintenance procedure. After switching off the machine, power is still supplied to the main machine and other devices. To prevent electrical shock, switch the machine off, wait for a few seconds, then unplug the machine from the power source.
2. Before you do any checks or adjustments after turning the machine off, work carefully to avoid injury. After removing covers or opening the machine to do checks or adjustments, never touch electrical components or moving parts (gears, timing belts, etc.).
3. After turning the machine on with any cover removed, keep your hands away from electrical components and moving parts. Never touch the cover of the fusing unit, gears, timing belts, etc.
4. Be sure to use a dedicated outlet with AC 120 V / 20 A for its power source.

Downloaded from www.Manualslib.com manuals search engine

2.2.3 INSTALLATION, DISASSEMBLY, AND ADJUSTMENTS

⚠CAUTION

1. After installation, maintenance, or adjustment, always check the operation of the machine to make sure that it is operating normally. This ensures that all shipping materials, protective materials, wires and tags, metal brackets, etc., removed for installation, have been removed and that no tools remain inside the machine. This also ensures that all release interlock switches have been restored to normal operation.
2. Never use your fingers to check moving parts causing spurious noise. Never use your fingers to lubricate moving parts while the machine is operating.
3. When the parts are disassembled, reassembly is the reverse of disassembly unless otherwise noted in this manual or other related documents. Be careful not to install small parts such as screws, washers, pins, E-rings, star washers in the wrong places.
4. Basically, the equipment should not be operated with any parts removed or disassembled.
5. Return the equipment to the original state and check the operation when the service is finished.
6. Be careful when removing the covers since there might be the parts with very sharp edges underneath.

2.2.4 SPECIAL TOOLS

⚠CAUTION

1. Use only standard tools approved for machine maintenance.
2. For special adjustments, use only the special tools and lubricants described in the service manual. Using tools incorrectly, or using tools that could damage parts, could damage the machine or cause injuries.

Downloaded from www.Manualslib.com manuals search engine

2.3 DURING MAINTENANCE

2.3.1 GENERAL

⚠CAUTION

1. Before you begin a maintenance procedure:
   - Switch the machine off.
   - Disconnect the power plug from the power source.
   - Allow the machine to cool for at least 10 minutes.
2. Avoid touching the components inside the machine that are labeled as hot surfaces.
3. Be sure not to touch high-temperature sections such as the exposure lamp, heater and fuser unit areas around them.
4. Be sure not to touch high-voltage sections such as the chargers, transfer belt, developer, high-voltage transformer, exposure lamp, inverter for the LCD back-light and power supply unit. Especially, the board of these components should not be touched since the electric charge may remain in the capacitors, etc. on them even after the power is turned OFF.
5. Be very careful to treat the touch panel gently and never hit it. Breaking the surface could cause malfunctions.

2.3.2 SAFETY DEVICES

⚠ WARNING

1. Never remove any safety device unless it requires replacement. Always replace safety devices immediately.
2. Never do any procedure that defeats the function of any safety device. Modification or removal of a safety device (fuse, switch, etc.) could lead to a fire and personal injury. Always test the operation of the machine to ensure that it is operating normally and safely after removal and replacement of any safety device.
3. For replacements use only the correct fuses or circuit breakers rated for use with the machine. Using replacement devices not designed for use with the machine could lead to a fire and personal injuries.
4. During servicing, be sure to check the rating plate and cautionary labels such as “CAUTION. HOT”, “CAUTION. HIGH VOLTAGE”, “CAUTION. LASER BEAM”, etc. to see if there is any dirt on their surface and if they are properly stuck to the equipment.

Downloaded from www.Manualslib.com manuals search engine

2.3.3 ORGANIC CLEANERS

⚠CAUTION

1. During preventive maintenance, never use any organic cleaners (alcohol, etc.) other than those described in the service manual.
2. Make sure the room is well ventilated before using any organic cleaner. Use organic solvents in small amounts to avoid breathing the fumes and becoming nauseous.
3. Switch the machine off, unplug it, and allow it to cool before doing preventive maintenance. To avoid fire or explosion, never use an organic cleaner near any part that generates heat.
4. Wash your hands thoroughly after cleaning parts with an organic cleaner to contamination of food, drinks, etc. which could cause illness.
5. Clean the floor completely after accidental spillage of silicone oil or other materials to prevent slippery surfaces that could cause accidents leading to hand or leg injuries. Use “My Ace” Silicone Oil Remover (or dry rags) to soak up spills. For more details, please refer to Technical Bulletin “Silicone Oil Removal” (A024-50).

2.3.4 LITHIUM BATTERIES

⚠WARNING

1. Always replace a lithium battery on a PCB with the same type of battery prescribed for use on that board. Replacing a lithium battery with any type other than the one prescribed for use on the board could lead to an explosion or damage to the PCB.
2. Never discard used batteries by mixing them with other trash. Remove them from the work site and dispose of them in accordance with local laws and regulations regarding the disposal of such items.

2.3.5 OZONE FILTERS

⚠CAUTION

1. Always replace ozone filters as soon as their service life expires (as described in the service manual). An excessive amount of ozone can build up around machines that use ozone filters if they are not replaced at the prescribed time. Excessive ozone could cause personnel working around the machine to feel unwell.
2. Provide proper ventilation since the equipment emits a slight amount of ozone.

Downloaded from www.Manualslib.com manuals search engine

2.3.6 POWER PLUG AND POWER CORD

⚠WARNING

1. Before serving the machine (especially when responding to a service call), always make sure that the power plug has been inserted completely into the power source. A partially inserted plug could lead to heat generation (due to a power surge caused by high resistance) and cause a fire or other problems.
2. Always check the power plug and make sure that it is free of dust and lint. Clean it if necessary. A dirty plug can generate heat which could cause a fire.
3. Inspect the length of the power cord for cuts or other damage. Replace the power cord if necessary. A frayed or otherwise damaged power cord can cause a short circuit which could lead to a fire or personal injury from electrical shock.
4. Check the length of the power cord between the machine and power supply. Make sure the power cord is not coiled or wrapped around any object such as a table leg. Coiling the power cord can cause excessive heat to build up and could cause a fire.
5. Make sure that the area around the power source is free of obstacles so the power cord can be removed quickly in case of an emergency.
6. Make sure that the power cord is grounded (earthed) at the power source with the ground wire on the plug.
7. Connect the power cord directly into the power source. Never use an extension cord.
8. When you disconnect the power plug from the power source, always pull on the plug, not the cable.
9. The copier shall be installed near the socket outlet and shall be accessible.
10. Be sure to fix and plug in the power cord securely after the installation so that no one trips over it.

Downloaded from www.Manualslib.com manuals search engine

2.4 AFTER INSTALLATION, SERVICING

2.4.1 DISPOSAL OF USED ITEMS

⚠WARNING

Never incinerate used toner or toner cartridges. Toner or toner cartridges thrown into a fire can ignite or explode and cause serious injury. At the work site always carefully wrap used toner and toner cartridges with plastic bags to avoid spillage before disposal or removal.

⚠CAUTION

1. Always dispose of used items (developer, toner, toner cartridges, OPC drums, packing materials, used batteries, IC-RAMs including lithium batteries, etc.) follow the local laws and regulations regarding the disposal of such items.
2. To protect the environment, never dispose of this product or any kind of waste from consumables at a household waste collection point. Dispose of these items at one of our dealers or at an authorized collection site.
3. Return used selenium drums to the service center for handling in accordance with company policy regarding the recycling or disposal of such items.

Caution:
Dispose of used batteries and IC-RAMs including lithium batteries according to this manual.
Attention:
Se débarrasser de batteries et IC-RAMs usés y compris les batteries en lithium selon ce manuel.
Vorsicht:
Entsorgung der gebrauchten Batterien und IC-RAMs (inclusive der Lithium-Batterie) nach diesem Handbuch.

Downloaded from www.Manualslib.com manuals search engine

2.4.2 POINTS TO CONFIRM WITH OPERATORS

At the end of installation or a service call, instruct the user about use of the machine. Emphasize the following points.

- Show operators how to remove jammed paper and troubleshoot other minor problems by following the procedures described in the operating instructions.
- Point out the parts inside the machine that they should never touch or attempt to remove.
- Confirm that operators know how to store and dispose of consumables.
- Make sure that all operators have access to an operating instruction manual for the machine.
- Confirm that operators have read and understand all the safety instructions described in the operating instructions.
- Demonstrate how to turn off the power and disconnect the power plug (by pulling the plug, not the cord) if any of the following events occur:
  1) Something has spilled into the product.
  2) Service or repair of the product is necessary.
  3) The product cover has been damaged.
- Caution operators about removing paper fasteners around the machine. They should never allow paper clips, staples, or any other small metallic objects to fall into the machine.

Downloaded from www.Manualslib.com manuals search engine

2.5 SPECIAL SAFETY INSTRUCTIONS FOR TONER

This section describes information for users in regard to the use of toner.

2.6 ACCIDENTAL PHYSICAL EXPOSURE

⚠CAUTION

1. Work carefully when removing paper jams or replacing toner bottles or cartridges to avoid spilling toner on clothing or the hands.
2. If toner is inhaled, immediately gargle with large amounts of cold water and move to a well ventilated location. If there are signs of irritation or other problems, seek medical attention.
3. If toner gets on the skin, wash immediately with soap and cold running water.
4. If toner gets into the eyes, flush the eyes with cold running water or eye wash. If there are signs of irritation or other problems, seek medical attention.
5. If toner is swallowed, drink a large amount of cold water to dilute the ingested toner. If there are signs of any problem, seek medical attention.
6. If toner spills on clothing, wash the affected area immediately with soap and cold water. Never use hot water! Hot water can cause toner to set and permanently stain fabric.

2.7 HANDLING AND STORING TONER

⚠WARNING

Toner, used toner, and developer are extremely flammable. Never store toner, developer, toner cartridges, or toner bottles (including empty toner bottles or cartridges) in a location where they will be exposed to high temperature or an open flame.

⚠CAUTION

1. Always store toner and developer supplies such as toner and developer packages, cartridges, and bottles (including used toner and empty bottles and cartridges) out of the reach of children.
2. Always store fresh toner supplies or empty bottles or cartridges in a cool, dry location that is not exposed to direct sunlight.

Downloaded from www.Manualslib.com manuals search engine

2.8 TONER DISPOSAL

⚠WARNING

1. Never attempt to incinerate toner, used toner, or empty toner containers (bottles or cartridges). Burning toner can explode and scatter, causing serious burns.
2. Always wrap used toner and empty toner bottles and cartridges in plastic bags to avoid spillage. Follow the local laws and regulations regarding the disposal of such items.
3. Dispose of used toner and toner cartridges at one of our dealers or at an authorized collection site. Always dispose of used toner cartridges and toner bottles in accordance with the local laws and regulations regarding the disposal of such items.

Downloaded from www.Manualslib.com manuals search engine

2.8.1 SAFETY INSTRUCTIONS FOR THIS MACHINE

⚠IMPORTANT SAFETY NOTICES

PREVENTION OF PHYSICAL INJURY

1. Before disassembling or assembling parts of the copier and peripherals, make sure that the copier power cord is unplugged.
2. The wall outlet should be near the copier and easily accessible.
3. Note that some components of the copier and the paper tray unit are supplied with electrical voltage even if the main power switch is turned off.
4. If any adjustment or operation check has to be made with exterior covers off or open while the main switch is turned on, keep hands away from electrified or mechanically driven components.
5. The inside and the metal parts of the fusing unit become extremely hot while the copier is operating. Be careful to avoid touching those components with your bare hands.

HEALTH SAFETY CONDITIONS

1. Never operate the copier without the ozone filters installed.
2. Toner and developer are non-toxic, but if you get either of them in your eyes by accident, it may cause temporary eye discomfort. Try to remove with eye drops or flush with water as first aid. If unsuccessful, get medical attention.

OBSERVANCE OF ELECTRICAL SAFETY STANDARDS

1. The copier and its peripherals must be installed and maintained by a customer service representative who has completed the training course on those models.
2. The NVRAM on the system control board has a lithium battery which can explode if replaced incorrectly. Replace the NVRAM only with an identical one. The manufacturer recommends replacing the entire NVRAM. Do not recharge or burn this battery. Used NVRAM must be handled in accordance with local regulations.

Downloaded from www.Manualslib.com manuals search engine

SAFETY AND ECOLOGICAL NOTES FOR DISPOSAL

1. Do not incinerate toner bottles or used toner. Toner dust may ignite suddenly when exposed to an open flame.
2. Dispose of used toner, developer, and organic photoconductors in accordance with local regulations. (These are non-toxic supplies.)
3. Dispose of replaced parts in accordance with local regulations.
4. When keeping used lithium batteries in order to dispose of them later, do not put more than 100 batteries per sealed box. Storing larger numbers or not sealing them apart may lead to chemical reactions and heat build-up.

LASER SAFETY

The Center for Devices and Radiological Health (CDRH) prohibits the repair of laser-based optical units in the field. The optical housing unit can only be repaired in a factory or at a location with the requisite equipment. The laser subsystem is replaceable in the field by a qualified Service engineer. The laser chassis is not repairable in the field. Service engineers are therefore directed to return all chassis and laser subsystems to the factory or service depot when replacement of the optical subsystem is required.

⚠WARNING

Use of controls, or adjustment, or performance of procedures other than those specified in this manual may result in hazardous radiation exposure.

⚠WARNING

WARNING: Turn off the main switch before attempting any of the procedures in the Laser Unit section. Laser beams can seriously damage your eyes.

Caution Label:

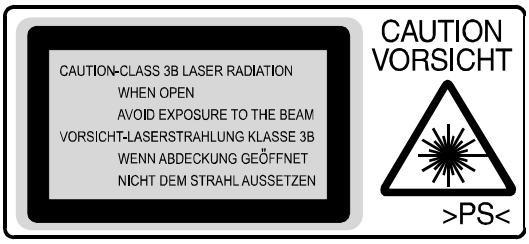

Downloaded from www.Manualslib.com manuals search engine

⚠WARNING

1. Avoid expose to laser beam during service. This equipment uses a laser diode. Be sure not to expose your eyes to the laser beam. Do not insert reflecting parts or tools such as a screwdriver on the laser beam path. Remove all reflecting metals such as watches, rings, etc. before starting service.
2. Make sure that the equipment will not operate before touching potentially dangerous places such as laser beam exit of the laser optical unit.

Downloaded from www.Manualslib.com manuals search engine

TABLE OF CONTENTS

1. INSTALLATION 1-1

1.1 INSTALLATION REQUIREMENTS 1-1
1.1.1 OPERATING ENVIRONMENT 1-1
1.1.2 MACHINE LEVEL 1-2
1.1.3 MINIMUM SPACE REQUIREMENTS 1-3
1.1.4 DIMENSIONS 1-4
1.1.5 POWER REQUIREMENTS 1-5
1.2 COPIER AND PERIPHERALS 1-6
1.3 COPIER e-STUD4500c/5500c 1-7
1.3.1 ACCESSORIES 1-7
1.3.2 INSTALLATION 1-8
Tapes and packing material 1-8
Shipping Retainer Removal 1-12
Developer Cartridge Installation 1-15
Reassemble the PCU 1-20
Reattach the Face Plate 1-22
Remove the Retainers in the Drawer Unit 1-23
Reinstall the Toner Hopper 1-26
STC (Soft Toner Cartridge) Installation 1-27
Make the Machine Level 1-28
Attach the PCU Stand Rack 1-29
Attach Decals 1-30
Initializing Developer and Toner 1-31
Load the Paper Trays 1-33
Make a Test Color Print 1-33
ACC (Automatic Color Calibration) Adjustment 1-33
Counter Display Setting 1-35
Print an SMC Report 1-35
Connect the Upper and Lower Tray Heaters 1-36
1.3.3 BREAKER SWITCH TEST PROCEDURE 1-37
How to Test the Electrical Breaker Switch 1-37
To return the switch to the ON position: 1-38
1.4 COPY TRAY (B756) 1-39
1.4.1 ACCESSORIES 1-39
1.4.2 INSTALLATION 1-40
1.5 A3/11" X 17" PAPER SIZE TRAY (B331) 1-43
1.5.1 ACCESSORIES 1-43
1.5.2 INSTALLATION 1-44
1.6 LCT (B473), LCT ADAPTER (B699) 1-49
1.6.1 ACCESSORIES 1-49
LCT (B473) 1-49
LCT Adapter (B699) 1-50

Downloaded from www.Manualslib.com manuals search engine

1.6.2 INSTALLATION 1-51
Removing Tape and Accessories 1-51
LCT Adapter (B699) Installation 1-52
LCT Installation 1-53
LCT (B473): Paper size change from A4 to 8 1/2” x 11” (LT) 1-56
1.7 8 1/2" X 14"/B4 PAPER SIZE TRAY (B474) 1-59
1.7.1 ACCESSORIES 1-59
1.7.2 INSTALLATION 1-60
LCT Connected to the Machine 1-60
1.8 2000/3000 SHEET FINISHERS (B700/B701) 1-63
1.8.1 ACCESSORIES 1-63
1.8.2 INSTALLATION 1-64
Removing Tapes and Packing Materials 1-65
Docking the Finisher to the Copier 1-67
Attaching the Trays 1-70
Leveling the Finisher 1-71
Support tray 1-72
Selecting the Staple Supply Name 1-73
Enabling Booklet Binding (B700 Only) 1-73
1.9 PUNCH UNIT (B702) 1-74
1.9.1 ACCESSORIES 1-74
1.9.2 INSTALLATION 1-75
1.10 MAIL BOX (B762) 1-78
1.10.1 ACCESSORIES 1-78
1.10.2 INSTALLATION 1-79
1.11 3000-SHEET FINISHER (B706), FINISHER ADAPTER (B698) 1-82
1.11.1 ACCESSORIES 1-82
3000-Sheet Finisher B706 Accessories 1-82
Finisher Adapter Kit B698 Accessories 1-83
1.11.2 INSTALLATION 1-84
Shipping tape and retainers 1-84
Finisher Adapter Kit B698 Installation 1-86
Finisher Installation 1-90
Selecting the Staple Supply Name 1-93
Stopper bracket (Co-packed with B695) Installation 1-93
1.12 PUNCH UNIT B531 1-95
1.12.1 ACCESSORIES 1-95
1.12.2 INSTALLATION 1-96
1.13 OUTPUT JOGGER UNIT (B703/B513) 1-100
1.13.1 ACCESSORIES 1-101
1.13.2 INSTALLATION 1-100

Downloaded from www.Manualslib.com manuals search engine

1.14 COVER INTERPOSER TRAY (B704) 1-103
1.14.1 ACCESSORIES 1-102
1.14.2 INSTALLATION 1-104
Removing Tapes and Packing Materials 1-104
Preparing the Finisher (B700/B701/B706) 1-105
Attaching the Extensions for the B706 1-106
Attaching the Extensions for the B700/B701 1-109
Attaching the Interposer Tray (B700/B701/B706) 1-110
Attaching the Corner Plates for the B706 1-111
Docking Finisher/Interposer with the Machine (B700/B701/B706) 1-113
1.15 MFP CONTROLLER OPTIONS 1-115
1.15.1 OVERVIEW 1-115
1.15.2 ACCESSORY CARDS 1-116
1.15.3 APPLICATIONS PROVIDED ON SD CARDS 1-117
1.15.4 HANDLING DIMMS AND SD CARDS 1-118
DIMMs 1-118
SD cards 1-118
1.15.5 MERGING APPLICATIONS ON ONE SD CARD 1-119
Overview 1-119
Merging Applications 1-120
Undo Exec 1-121
Storing SD Application Cards on Site 1-122
1.15.6 PRINTER/SCANNER UNIT GM-2100 (N737) 1-123
Accessories 1-123
Installation 1-124
USB SP Settings 1-126
1.15.7 POSTSCRIPT3 UNIT TYPE 3260 (B761) 1-127
Accessory Check 1-127
1.16.8 DATAOVERWRITESECURITY UNIT TYPE C (B735) 1-128
Accessory Check 1-128
Before You Begin… 1-128
Seal Check And Removal 1-129
Installation Procedure 1-130
1.15.9 COPY CONNECTOR TYPE 3260 (B328) 1-132
1.15.10 EFI PRINTER CONTROLLER (G815) 1-134

2. PREVENTIVE MAINTENANCE 2-1
2.1 OVERVIEW 2-1
2.2 PM COUNTER 2-2
2.2.1 DISPLAYING THE PM COUNTER 2-2
2.2.2 PM PARTS SCREEN DETAILS 2-3
All PM Parts list: Main Menu 2-3
Number button submenu 2-4
Parts list for PM yield indicator 2-5
2.3 PM TABLES 2-6
2.3.1 MAIN MACHINE 2-6
Copier PM Parts 2-6
ARDF PM Parts 2-10

Downloaded from www.Manualslib.com manuals search engine

2.3.2 2000/3000-SHEET BOOKLET FINISHER B700/B701....2-11
2.3.3 PUNCH B702....2-11
2.3.4 3000-SHEET FINISHER B706....2-11
2.3.5 PUNCH B531....2-11
2.3.6 COVER INTERPOSER TRAY B704....2-12
2.3.7 LCT B473....2-12
2.4 LUBRICATION POINTS....2-13
2.4.1 COPIER....2-13
OPC, ITB Replacement....2-13
Fusing Unit....2-14

3. REPLACEMENT AND ADJUSTMENT....3-1
3.1 GENERAL CAUTIONS....3-1
3.1.1 DRUM....3-1
3.1.2 PCU....3-1
3.1.3 TRANSFER BELT UNIT....3-2
3.1.4 SCANNER UNIT....3-2
3.1.5 LASER UNIT....3-2
3.1.6 DEVELOPMENT....3-3
3.1.7 CLEANING....3-4
3.1.8 FUSING UNIT....3-4
3.1.9 PAPER FEED....3-4
3.1.10 USED TONER (WASTE TONER)....3-4
3.2 COMMON REMOVAL PROCEDURES....3-5
3.2.1 ARDF....3-5
3.2.2 OPERATION PANEL, TOP COVERS....3-6
3.2.3 LEFT COVERS....3-7
3.2.4 FRONT DOOR....3-8
3.2.5 RIGHT COVERS....3-9
3.2.6 REAR COVERS....3-10
3.2.7 TONER HOPPER, FACEPLATE, PCU....3-11
Removing Toner Hopper, Face plate, PCU....3-11
Reinstalling PCU, Face plate, Toner Hopper....3-15
3.2.8 IMAGE TRANSFER UNIT....3-18
3.2.9 DRAWER UNIT....3-20
3.2.10 DUPLEX UNIT....3-22
3.2.11 OPENING AND LOCKING THE CONTROLLER BOX COVER....3-23
3.2.12 SD CARD STORAGE....3-24
3.3 SCANNER UNIT....3-25
3.3.1 EXPOSURE GLASS....3-25
3.3.2 LENS BLOCK, PAPER SIZE SENSORS....3-26
3.3.3 EXPOSURE LAMP....3-27
3.3.4 SCANNER MOTOR....3-28
3.3.5 SCANNER HP SENSOR....3-29
3.3.6 SCANNER INTERFACE BOARD (SIOB)....3-30
3.3.7 SCANNER WIRE....3-31
Scanner Wire Removal....3-31
Scanner Wire Reinstallation and Scanner Position Adjustment....3-32
3.4 LASER UNIT....3-34

Downloaded from www.Manualslib.com manuals search engine

3.4.1 CAUTION DECALS 3-34
3.4.2 POLYGON MOTOR....3-35
3.4.3 LASER UNIT....3-36
Adjustments After Laser Unit Replacement 3-39
3.4.4 LASER SYNCHRONIZATION DETECTOR....3-40
3.5 PCU (POTO CONDUCTOR UNITS) 3-41
3.5.1 DEVELOPER REPLACEMENT 3-41
3.5.2 DEVELOPMENT GEARS 3-49
3.5.3 CHARGE ROLLER UNIT....3-50
3.5.4 DRUM AND CLEANING BLADE....3-51
Removing the OPC Drum 3-51
Removing the Cleaning Blade....3-52
3.5.5 PCU CLEANING UNIT....3-54
3.5.6 TD SENSOR....3-56
3.5.7 AFTER REPLACING THE PCU COMPONENTS AND DEVELOPER 3-57
3.6 TONER SUPPLY UNIT 3-59
3.6.1 STC PORT CLEANING 3-59
3.6.2 CONNECTOR BOARD (CNB) 3-60
3.6.3 TONER PUMP....3-61
3.6.4 TONER END SENSOR....3-62
3.6.5 TONER HOPPER MOTOR....3-63
3.7 PAPER TRANSFER UNIT 3-64
3.7.1 RELAY SENSOR....3-64
3.7.2 DOUBLE-FEED DETECTION SENSOR, REGISTRATION SENSOR....3-65
3.7.3 PAPER TRANSFER UNIT 3-66
3.7.4 PAPER TRANSFER ROLLER, DISCHARGE PLATE 3-68
3.7.5 LUBRICANT BAR 3-69
3.7.6 CLEANING BLADE....3-70
3.7.7 PTR CLEANING BRUSH ROLLER 3-71
3.7.8 PAPER TRANSPORT BELT, SEPARATION POWER PACK 3-72
3.7.9 REGISTRATION MOTOR 3-73
3.7.10 DOUBLE-FEED DETECTION LED....3-74
3.8 IMAGE TRANSFER UNIT....3-75
3.8.1 ITB (Image Transfer Belt), BELT CLEANING UNIT 3-75
Disassembly and ITB Replacement 3-75
Reassembly of the Image ITB Unit and Belt Cleaning Unit 3-77
Dusting the ITB with Lubricant Powder 3-79
3.8.2 ITB CLEANING BLADE, DUST COLLECTION UNIT 3-81
3.8.3 ITB CLEANING ROLLER, SCRAPER BLADE....3-82
3.8.4 MUSIC AND ID SENSORS....3-83
3.8.5 IMAGE TRANSFER POWER PACK....3-84
3.8.6 BELT POSITION SENSORS 3-85
3.9 FUSING UNIT....3-86
3.9.1 FUSING BELT STRIPPERS....3-86
3.9.2 FUSING UNIT....3-87
3.9.3 FUSING EXIT SENSOR, ACCORDION JAM SENSOR 3-88
3.9.4 PRESSURE ROLLER THERMOSTATS, THERMISTOR 3-89

Downloaded from www.Manualslib.com manuals search engine

3.9.5 FUSING CLEANING UNIT....3-90
3.9.6 FUSING BELT THERMOSTATS....3-91
3.9.7 FUSING THERMISTORS, HEATING ROLLER TEMPERATURE SENSOR....3-92
3.9.8 FUSING BELT LUBRICATION ROLLER, CLEANING ROLLER....3-93
3.9.9 PRESSURE ROLLER CLEANING FELT ROLLER....3-94
3.9.10 HOT ROLLER, HEATING ROLLER FUSING LAMPS....3-96
3.9.11 PRESSURE ROLLER FUSING LAMP....3-98
3.9.12 HEATING ROLLER, FUSING BELT, HOT ROLLER....3-99
3.9.13 PRESSURE ROLLER....3-102
3.9.14 PRESSURE ROLLER STRIPPER....3-103
3.10 DUPLEX UNIT....3-104
3.10.1 DUPLEX INVERTER MOTOR....3-104
3.10.2 DUPLEX TRANSPORT MOTOR....3-105
3.10.3 DUPLEX UNIT SENSORS....3-106
Duplex Entrance Sensor....3-106
Transport Sensor 1, 2, Inverter Exit Sensor....3-107
Transport Sensor 3....3-109
3.10.4 DUPLEX JOGGER MOTOR....3-110
3.10.5 DUPLEX JOGGER BELT....3-111
3.11 TANDEM TRAY (TRAY 1)....3-112
3.11.1 TANDEM TRAY....3-112
3.11.2 REAR FENCE RETURN SENSOR REPLACEMENT....3-114
3.11.3 REAR FENCE HP SENSOR REPLACEMENT....3-115
3.11.4 TANDEM RIGHT TRAY PAPER SENSOR REPLACEMENT....3-116
3.11.5 BOTTOM PLATE LIFT WIRE REPLACEMENT....3-117
3.11.6 TANDEM TRAY PAPER SIZE CHANGE....3-119
3.12 PAPER FEED (TRAYS 2, 3)....3-122
3.12.1 PICKUP, FEED, SEPARATION ROLLERS....3-122
3.12.2 FEED UNIT....3-123
3.12.3 SEPARATION ROLLER PRESSURE ADJUSTMENT....3-125
3.12.4 PAPER END, TRAY LIFT, PAPER FEED SENSORS....3-126
3.12.5 VERTICAL TRANSPORT SENSOR....3-127
3.13 BYPASS UNIT....3-128
3.13.1 BYPASS PICK-UP, FEED, SEPARATION ROLLERS....3-128
3.13.2 BYPASS AUTO PAPER SIZE DETECTION SWITCHES....3-129
3.13.3 BYPASS UNIT....3-130
3.13.4 BYPASS PAPER END SENSOR, FEED SENSOR....3-131
3.13.5 BYPASS FEED CLUTCH....3-132
3.14 BOARDS....3-133
3.14.1 CONTROLLER UNIT....3-133
3.14.2 CONTROLLER BOARD, 256 MB MEMORY, NVRAM....3-134
3.14.3 NVRAM REPLACEMENT....3-135
Upload NVRAM Data -> SD Card....3-135
Replace NVRAM....3-135
Restore NVRAM Data to the New NVRAM....3-135
3.14.4 CONTROLLER BOX COVER, BICU, IOB....3-136
3.14.5 RDS BOARD, JUMPER....3-138
3.14.6 INTERFACE BOARD, MOTHER BOARD....3-139

Downloaded from www.Manualslib.com manuals search engine

3.14.7 HVPS, PFC BOARD 3-140
3.14.8 PSU 3-141
3.14.9 AC DRIVE BOARD 3-142
3.14.10 TRANSFER MOTOR, DRIVE, DRIVE MOTOR BOARDS 3-143
3.15 HDD UNIT....3-144
Disposal of HDD Units 3-145
Reinstallation 3-145
3.16 MOTORS....3-146
3.16.1 PCU MOTOR, DRUM MOTOR 3-146
3.16.2 PAPER TRANSFER MOTOR 3-148
3.16.3 IMAGE TRANSFER MOTOR....3-149
3.16.4 WASTE TONER TRANSPORT MOTOR, WASTE TONER DISTRIBUTION MOTOR 3-150
3.16.5 BOTTOM PLATE LIFT MOTOR (TRAYS 1, 2, 3) 3-151
3.16.6 ITB DRIVE MOTOR 3-152
3.17 AIR FILTERS....3-153
3.17.1 TONER HOPPER FILTER....3-153
3.17.2 OZONE FILTER, DUST FILTERS 3-154
3.17.3 SCANNER FILTER....3-155
3.18 ARDF....3-156
3.18.1 ARDF COVERS....3-156
3.18.2 ORIGINAL FEED UNIT....3-157
3.18.3 FEED BELT, PICK-UP ROLLER....3-158
3.18.4 BOTTOM PLATE POSITION SENSOR 3-159
3.18.5 INTERVAL, ORIGINAL WIDTH, SKEW CORRECTION SEPARATION SENSORS 3-160
3.18.6 ORIGINAL LENGTH SENSORS....3-161
3.18.7 COVER OPEN, ORIGINAL SET, BOTTOM PLATE, PICK-UP ROLLER HP, UPPER INVERTER SENSORS 3-162
3.18.8 ARDF POSITION SENSOR, APS START SENSOR 3-164
3.18.9 ORIGINAL REGISTRATION, EXIT SENSORS....3-165
3.18.10 ARDF SEPARATION ROLLER....3-167
3.18.11 ARDF TRANSPORT BELT 3-168
Removing the ARDF Transport Belt Assembly 3-168
Removing the Belt....3-169
Reinstalling the Belt 3-171
Reattaching the White Cover 3-172
3.18.12 ARDF CONTROL BOARD....3-173
3.18.13 ARDF BOTTOM PLATE LIFT MOTOR....3-174
3.18.14 ARDF FEED MOTOR, ARDF TRANSPORT MOTOR 3-175
3.18.15 ARDF PICK-UP ROLLER LIFT MOTOR....3-176
3.19 IMAGE ADJUSTMENTS....3-177
3.19.1 SCANNING....3-177
Scanner sub-scan magnification 3-177
Scanner leading edge and side-to-side registration 3-177
Main scan dot position correction....3-178

Downloaded from www.Manualslib.com manuals search engine

3.19.2 ARDF 3-179
ARDF side-to-side and leading edge registration 3-179
3.19.3 REGISTRATION 3-180
Image Area 3-180
Leading Edge 3-180
Side to Side 3-180
Adjustment Standards 3-180
Paper Registration Standard 3-180
Adjustment Procedure 3-181
3.19.4 COLOR REGISTRATION 3-182
Forced MUSIC Adjustment 3-182
Adjustment of Line Speed for Thick Paper 3-182
Color Registration Test and Error Adjustment 3-182
3.19.5 SKEW ADJUSTMENT AFTER LASER UNIT REPLACEMENT ..3-183
3.19.6 PRINTER GAMMA CORRECTION 3-185
Copy Mode 3-185
Printer Mode 3-189
Adjustment Reference For Gamma Correction 3-190
3.20 TOUCH SCREEN CALIBRATION 3-191

4. TROUBLESHOOTING 4-1
4.1 PROGRAM DOWNLOAD 4-1
4.1.1 OVERVIEW 4-1
4.1.2 RECOVERY METHODS 4-1
4.1.3 DOWNLOAD ERROR CODES 4-2
4.1.4 IMPORTANT SP CODES 4-5
4.2 SPECIAL PROCEDURES 4-6
4.2.1 SP2181 030 (ALIGNMENT RESULT) ERRORS 4-6
4.2.2 COLOR REGISTRATION ERROR ADJUSTMENT 4-10
Color Registration Error Correction 4-10
Color Skew Error Correction 4-12
Overall Check 4-13
Color Registration at the Left and Right Folds of the Test Pattern 4-13
4.2.3 SP3812 001 (DevSetup Execute) ERRORS 4-15
4.2.4 PROCESS CONTROL TROUBLESHOOTING 4-16
Summary of Process Control SC Codes 4-16
Process Control Self-Check: SP3821 4-17
4.2.5 COLOR ADJUSTMENT FOR CONNECTED COPIERS 4-23
4.3 SERVICE CALL CONDITIONS 4-25
4.3.1 SERVICE MODE LOCK/UNLOCK 4-25
4.3.2 SERIES SERVICE CALL CONDITIONS 4-26

Downloaded from www.Manualslib.com manuals search engine

4.3.3 SC CODE DESCRIPTIONS....4-27
SC codes Group 1: Scanning....4-28
SC codes Group 2: Exposure....4-30
SC codes Group 3: Image Development - 1....4-37
SC codes Group 4: Image Development - 2....4-42
SC codes Group 5: Paper Feed....4-47
SC codes Group 6: Device Communication....4-55
SC codes Group 7: Peripherals....4-58
SC800: Overall System....4-65
SC900: Miscellaneous....4-71
4.3.4 ADDITIONAL SC CODES PRINTED IN SMC REPORTS....4-75
4.4 ADDITIONAL INFORMATIONS....4-76
4.4.1 TRAY PAPER SIZE SETTING....4-76
SYMPTOM:....4-76
CAUSE:....4-76
ACTION:....4-76
4.4.2 PAPER MISFEED (J098/099)....4-77
SYMPTOM:....4-77
CAUSE:....4-77
ACTION:....4-78
How to Change the “Paper Thickness” and “Paper Type” Settings:....4-79
How to Change the “Paper Type Detect” or “Double Feed Detect” Settings:....4-79
4.4.3 PAPER FEED SKEW....4-80
SYMPTOM:....4-80
CAUSE:....4-80
SOLUTION:....4-80
HOW TO CHECK THE POSITION OF THE REAR REGISTRATION PRESSURE SPRING:....4-80
4.4.4 WHITE LINE IN SUB-SCAN DIRECTION ON SINGLE COLOR SOLID IMAGE....4-84
SYMPTOM:....4-84
CAUSE:....4-84
ACTION:....4-84
4.4.5 DIRTY BLACK LINE IN SUB-SCAN DIRECTION OR DIRTY BACKGROUND....4-85
SYMPTOM:....4-85
CAUSE:....4-85
ACTION:....4-85
APPENDIX:....4-89
4.4.6 EXPANDED SOFT TONER CARTRIDGE....4-90
SYMPTOM:....4-90
CAUSE:....4-90
ACTION:....4-90
4.4.7 SYTEM STOP CONTROL DUE TO THE TEMPERATURE LIMITATION....4-91
OVERVIEW:....4-91
ACTION:....4-91

Downloaded from www.Manualslib.com manuals search engine

4.4.8 LOW PAWER MODE TEMPERATURE 4-92
SYMPTOM: 4-92
CAUSE: 4-92
ACTION: 4-92
4.4.9 POOR FUSING ON 100g/m^2 PAPER 4-94
SYMPTOM: 4-94
CAUSE: 4-94
SOLUTION: 4-94
ACTION: 4-94
IMPORTANT: 4-94
Final Solution: Middle Thickness Paper Mode 4-95
APPENDIX: 4-99
4.4.10 ABNORMAL SHIFT TRAY MOVEMENT OF SR842 (B706) WITH EFI PRINTER CONTROLLER (E-7000) 4-100
SYMPTOM: 4-100
CAUSE: 4-100
SOLUTION: 4-100
4.4.11 POOR FUSING ON 100G/M2 PAPER.....4-101
SYMPTOM:.....4-101
CAUSE and SOLUTION: 4-102
Fusing Anti-glossy Streak Kit (P/N B1329713):.....4-103
4.4.12 COPIER FIRMWARE UPDATE NOTICE WHEN COLOR CONTROLLER E-7000 IS INSTALLED.....4-105
REASON:.....4-105
PROCEDURE: 4-105
4.4.13 POOR FUSING ON 100g/m^2 PAPER.....4-107
SYMPTOM:.....4-107
CAUSE:.....4-107
SOLUTION:.....4-107
4.4.14 NIP WIDTH ADJUSTMENT 4-112
MEASURING THE NIP WIDTH:.....4-112
NIP WITH SPECIFICATIONS: 4-113
ADJUSTING THE NIP WIDTH:.....4-114

5. SERVICE TABLES 5-1

5.1 SERVICE PROGRAM MODE.....5-1
5.1.1 SERVICE PROGRAM MODE OPERATION.....5-1
Service Mode Lock/Unlock.....5-1
To Enter and Exit the Service Mode.....5-2
To Switch to the Copy Window for Test Printing 5-2
Using the SP Mode 5-2
SP Mode Button Summary.....5-4
SP Mode Print (SMC Print) 5-5
5.2 RESETS 5-6
5.2.1 MEMORY ALL CLEAR: SP5801.....5-6

Downloaded from www.Manualslib.com manuals search engine

5.2.2 SOFTWARE AND SETTING RESET....5-8
Software Reset....5-8
Resetting the User Tool Settings....5-8
Resetting Copy/Document Server Features Only....5-8
Resetting Scanner Features Only....5-8
5.3 TEST PATTERN PRINTING....5-9
5.3.1 PRINTING TEST PATTERN: SP2109 002....5-9
Test Pattern Table....5-9
5.3.2 IPU TEST PATTERNS: SP4417....5-10
5.4 FIRMWARE UPDATE....5-11
5.4.1 FIRMWARE UPDATE PROCEDURE....5-11
Firmware Update Procedure....5-12
Verifying the Firmware Update....5-15
5.4.2 DOWNLOADING STAMP DATA....5-17
5.4.3 UPLOADING AND DOWNLOADING NVRAM DATA....5-18
Uploading NVRAM Data to an SD card....5-18
Downloading an SD Card to NVRAM....5-19
5.5 SERVICE PROGRAM TABLES....5-20
5.5.1 SERVICE TABLE KEY....5-20
5.5.2 COPIER SERVICE TABLES....5-22
Group 1000....5-22
Group 2000....5-33
Group 3000....5-80
Group 4000....5-96
Group 5000....5-106
Group 6000....5-132
Group 7000....5-141
Group 8000....5-151
Group 9000....5-186
5.5.3 PRINTER SERVICE TABLE....5-188
Group 1 (Printer)....5-188
5.5.4 SCANNER SERVICE TABLE....5-190
Group 1 (Scanner)....5-190
Group 2 (Scanner)....5-190
5.6 COPIER INPUT/OUTPUT CHECK....5-191
5.6.1 COPIER INPUT CHECK: SP5803....5-191
5.6.2 COPIER OUTPUT CHECK: SP5804....5-200
5.7 ARDF INPUT/OUTPUT CHECK....5-202
5.7.1 ADF INPUT CHECK: SP6007....5-202
5.7.2 ADF OUTPUT CHECK: SP6008....5-203
5.8 FINISHER 1 (B700/B701) INPUT/OUTPUT CHECK....5-204
5.8.1 INPUT CHECK: FINISHER 1 (B700/B701) SP6121....5-204
5.8.2 OUTPUT CHECK FINISHER 1: (B700/B701) SP6123....5-205
5.9 FINISHER 2 (B706) INPUT/OUTPUT CHECK....5-206
5.9.1 INPUT CHECK FINISHER 2: (B706) SP6122....5-206
5.9.2 OUTPUT CHECK FINISHER 2 (B706) SP6125....5-207
5.10 USING THE DEBUG LOG....5-208
5.10.1 SWITCHING ON AND SETTING UP SAVE DEBUG LOG....5-208
5.10.2 RETRIEVING THE DEBUG LOG FROM THE HDD....5-211

Downloaded from www.Manualslib.com manuals search engine

5.10.3 RECORDING ERRORS MANUALLY 5-212
5.10.4 NEW DEBUG LOG CODES 5-213
SP5857-015 Copy SD Card-to-SD Card: Any Desired Key 5-213
SP5857-016 Create a File on HDD to Store a Log 5-213
SP5857-017 Create a File on SD Card to Store a Log.....5-213
5.11 USER TOOLS.....5-214
5.11.1 OVERVIEW 5-214
5.11.2 SYSTEM SETTINGS 5-215
5.11.3 MAINTENANCE.....5-217
5.11.4 COPIER/DOCUMENT SERVER FEATURES.....5-218
5.11.5 PRINTER FEATURES 5-221
5.11.6 SCANNER FEATURES 5-223
5.11.7 INQUIRY.....5-224
5.11.8 COUNTER 5-224

6. DETAILS.....6-1
6.1 GENERAL OVERVIEW 6-1
6.1.1 MAIN MACHINE 6-1
6.1.2 PAPER PATH: COVER INTERPOSER TRAY.....6-3
6.1.3 PAPER PATH: 9-BIN MAILBOX 6-4
6.1.4 DRIVE LAYOUT.....6-5
6.2 BOARDS.....6-6
6.2.1 BLOCK DIAGRAM.....6-6
6.2.2 COMPONENT DESCRIPTIONS.....6-7
6.2.3 CONTROLLER BOX VENTILATION 6-9
6.3 COPY PROCESS OVERVIEW.....6-10
6.4 ARDF.....6-13
6.4.1 OVERVIEW 6-13
6.4.2 ARDF ELECTRICAL COMPONENTS 6-14
Components View 1: Sensors.....6-14
Components View 2: Motors, Sensors, Other 6-15
ARDF Components View 3: Drive Motors 6-16
6.4.3 ORIGINAL SIZE DETECTION 6-17
6.4.4 PICK-UP ROLLER.....6-20
6.4.5 BOTTOM PLATE LIFT.....6-21
6.4.6 ORIGINAL FEED AND SEPARATION.....6-22
6.4.7 ORIGINAL FEED AND SKEW CORRECTION 6-23
6.4.8 SLIP DETECTION 6-24
6.4.9 ORIGINAL TRANSPORT (ONE-SIDED) 6-25
6.4.10 DUPLEX SCANNING.....6-26
6.4.11 ARDF JAM DETECTION 6-28
Jam Detection Sensor Layout 6-28
Jam Detection Table 6-29
6.5 SCANNER UNIT.....6-30
6.5.1 OVERVIEW 6-30
6.5.2 ORIGINAL SIZE DETECTION 6-31
Detection Timing 6-33
6.5.3 SCANNER DRIVE 6-34
6.5.4 SCANNER UNIT FANS AND ANTI-CONDENSATION HEATER ...6-35

Downloaded from www.Manualslib.com manuals search engine

6.5.5 DUST DETECTION 6-36
Overview 6-36
What Happens if Dust is Detected? 6-37
How is the Dust Detected? 6-38
The Effects of SP Mode Settings on Dust Detection 6-39
6.6 IMAGE PROCESSING 6-40
6.6.1 OVERVIEW 6-40
6.6.2 SBU (SENSOR BOARD UNIT) 6-41
SBU 6-41
Operation Summary 6-41
Storing Operation Settings 6-41
SBU Test Mode 6-41
6.6.3 IPU (IMAGE PROCESSING UNIT) 6-42
6.7 LASER UNIT 6-43
6.7.1 OVERVIEW 6-43
6.7.2 LD UNIT 6-44
Dual Beam Writing 6-44
LD Safety Switches 6-44
6.7.3 OPTICAL PATHS 6-45
Optical Path 6-46
6.7.4 IMAGE POSITION CORRECTION (MUSIC) 6-47
What does MUSIC do? 6-47
When is MUSIC done? 6-47
Location of the MUSIC Sensors 6-48
How is MUSIC Done? 6-49
3rd Mirror Position Adjustment 6-51
Exposure Unit Temperature Sensors 6-51
6.8 PHOTOCONDUCTOR UNITS (PCU) 6-52
6.8.1 OVERVIEW OF TANDEM PCU UNITS 6-52
6.8.2 AROUND THE DRUM 6-53
Drum Drive 6-54
Drum Charge 6-55
Drum Cleaning 6-56
Drum Ventilation 6-57
Ozone Ventilation 6-59
6.8.3 DEVELOPMENT UNIT 6-60
Overview 6-60
Development Unit Operation 6-61
Development, PCU Drive 6-62
6.9 TONER SUPPLY 6-63
6.9.1 OVERVIEW 6-63
6.9.2 TONER SUPPLY MECHANISM 6-65
6.9.3 TONER CARTRIDGE 6-66
6.9.4 TONER END SENSORS 6-68
Toner near-end 6-68
Toner end 6-69
Toner End Recovery 6-69
6.10 WASTE TONER COLLECTION 6-70
6.10.1 WASTE TONER PATH 6-70

Downloaded from www.Manualslib.com manuals search engine

6.10.2 WASTE TONER UNIT MOTORS....6-72
6.10.3 WASTE TONER COLLECTION UNIT SENSORS....6-73
Waste Toner Bottle Set Sensor....6-73
Waste Toner Bottle Near-Full Sensor....6-74
Waste Toner Bottle Full Sensor....6-74
Waste Toner Bottle Lock Sensor....6-74
Waste Toner Bottle Transport Motor....6-74
6.11 PROCESS CONTROL....6-75
6.11.1 OVERVIEW....6-75
6.11.2 COMPONENTS USED DURING PROCESS CONTROL....6-76
Potential Sensor....6-76
ID Sensors....6-77
TD Sensor....6-79
Temperature/Humidity Sensors....6-79
List of Process Control Acronyms....6-80
Important SP Codes Related to Process Control....6-81
6.11.3 POTENTIAL CONTROL....6-82
When is Potential Control Done?....6-82
What is Done During Potential Control?....6-83
6.11.4 TONER SUPPLY CONTROL....6-87
Overview....6-87
Toner Supply Operation Flow....6-89
6.12 IMAGE TRANSFER AND PAPER TRANSFER....6-90
6.12.1 OVERVIEW....6-90
6.12.2 ITB DRIVE....6-93
6.12.3 ITB LIFT....6-94
6.12.4 TRANSFER POWER PACK....6-96
6.12.5 PAPER TRANSFER AND SEPARATION....6-97
6.12.6 PTR CLEANING....6-98
6.12.7 ITB CLEANING....6-99
6.12.8 ITB SPEED CONTROL....6-100
6.12.9 ITB VENTILATION....6-101
6.13 PAPER FEED....6-102
6.13.1 OVERVIEW....6-102
6.13.2 DRIVE....6-104
6.13.3 TRAY AND PAPER LIFT MECHANISM – TRAY 2,3....6-105
Bottom Plate Lift....6-105
Lift Sensor....6-106
6.13.4 PAPER FEED AND SEPARATION MECHANISM....6-107
Feed and Separation at Standby: No Paper Present....6-107
Paper Feed and Separation....6-108
Separation Roller Release Mechanism....6-109
6.13.5 PAPER NEAR-END AND PAPER END – TRAYS 2 AND 3....6-110
6.13.6 PAPER SIZE DETECTION....6-111
Tandem Tray (Tray 1)....6-111
Universal Cassettes (Tray 2, 3)....6-111
6.13.7 PAPER TRAY HEATERS....6-113
6.13.8 TANDEM TRAY – TRAY 1....6-114
Overview....6-114

Downloaded from www.Manualslib.com manuals search engine

Connecting the Left and Right Sides of the Tray....6-115
Paper Lift/Remaining Paper Detection....6-116
Fence Drive....6-118
Rear Fence Drive....6-119
Tray Side-to-side Positioning....6-120
6.13.9 TRAY POSITIONING MECHANISM – TRAYS 1 TO 3....6-121
6.13.10 BYPASS TRAY....6-122
Bypass Feed and Separation....6-122
Bypass Tray Paper End Detection....6-123
Bypass Paper Size Detection....6-124
6.13.11 PAPER REGISTRATION....6-126
Overview....6-126
Paper Registration Drive....6-127
Jam Removal at Paper Registration....6-128
6.13.12 PAPER TYPE AND DOUBLE-FEED DETECTION....6-129
6.14 FUSING, PAPER EXIT....6-132
6.14.1 OVERVIEW....6-132
6.15 THERMISTORS, THERMOSTATS....6-134
6.15.1 FUSING UNIT DRIVE....6-135
6.15.2 LUBRICATION AND CLEANING....6-136
Stripper Retraction....6-137
6.15.3 FUSING TEMPERATURE CONTROL....6-138
Basic Temperature Control....6-138
Correction for Machine Internal Temperature....6-140
Copy Speed Reduction (CPM Down Mode)....6-140
6.15.4 FUSING UNIT VENTILATION....6-141
6.16 DUPLEX UNIT....6-142
6.16.1 OVERVIEW....6-142
6.16.2 DUPLEX DRIVE....6-143
6.16.3 INVERTER OPERATION....6-144
Inverter Feed-in and Jogging....6-144
Inverter Feed-out....6-145
6.16.4 DUPLEX TRAY FEED....6-146
6.16.5 DUPLEX INTERLEAVE FEED....6-147
6.16.6 DUPLEX UNIT VENTILATION....6-149
6.17 PAPER EXIT....6-150
6.17.1 FACE UP EXIT MECHANISM....6-150
6.17.2 DE-CURL MECHANISM....6-151
6.17.3 PAPER EXIT COOLING....6-152
6.17.4 ENERGY SAVER MODES....6-153

A3/11”X17 PAPER SIZE TRAY

1. INSTRALLATION B331-1

2. REPLACEMENT AND ADJUSTMENT B331-2
2.1 BOTTOM PLATE LIFT WIRE REPLACEMENT.... B331-2

Downloaded from www.Manualslib.com manuals search engine

3. DETAILED DESCRIPTIONS..... B331-4
3.1 SECTIONAL DESCRIPTION.....B331-4LCT (LARGE CAPACITY TRAY)

1. REPLACEMENT AND ADJUSTMENT B473-1
1.1 EXTERNAL COVERS..... B473-1
1.2 PICK-UP/FEED/SEPARATION ROLLERS..... B473-2
1.3 PICK-UP SOLENOID..... B473-3
1.4 PAPER END SENSOR, UPPER COVER SWITCHES..... B473-4
1.5 TRAY MOTOR..... B473-5
1.6 PAPER STACK SENSOR..... B473-5
1.7 PAPER SIZE ADJUSTMENT..... B473-6

2. DETAILS..... B473-7
2.1 OVERVIEW B473-7
2.1.1 LCT MAIN COMPONENTS B473-7
2.1.2 LCT DRIVE LAYOUT..... B473-9
2.2 PAPER FEED AND SEPARATION B473-10
2.2.1 STARTING PAPER FEED B473-10
2.2.2 FEED AND SEPARATION..... B473-11
2.3 PAPER LIFT B473-12
2.4 PAPER HEIGHT DETECTION B473-14
2.5 PAPER END DETECTION B473-15

2000/3000-SHEET FINISHER

1. 1. REPLACEMENT AND ADJUSTMENT B700-1
1.1 BASIC PROCEDURES..... B700-1
1) 1.1.1 COVERS..... B700-1
2) 1.1.2 UPPER TRAY, END FENCE B700-2
1.2 UPPER TRAY LIMIT SENSOR, LIMIT SWITCH B700-4
1.3 POSITIONING ROLLER..... B700-5
1.4 PROOF TRAY EXIT SENSOR B700-6
1.5 UPPER TRAY HEIGHT SENSORS 1, 2..... B700-7
1.6 EXIT GUIDE PLATE, UPPER TRAY EXIT SENSOR B700-8
1.7 PROOF TRAY FULL SENSOR..... B700-9
1.8 FINISHER ENTRANCE SENSOR B700-10
1.9 PRE-STACK TRAY EXIT SENSOR..... B700-11
1.10 FOLD UNIT EXIT SENSOR..... B700-12
1.11 FOLD ADJUSTMENTS (B700 ONLY) B700-13
1) 1.11.1 FOLDING HORIZONTAL SKEW ADJUSTMENT B700-13
2) 1.11.2 FOLD VERTICAL SKEW ADJUSTMENT B700-16
1.12 CORNER STAPLER..... B700-17
1.13 FOLD UNIT..... B700-18
1.14 FOLD UNIT ENTRANCE SENSOR..... B700-20
1.15 STACK PRESENT SENSOR..... B700-21

Downloaded from www.Manualslib.com manuals search engine

1.16 BOOKLET STAPLER, BOOKLET STAPLER MOTOR B700-22
1) 1.16.1 BOOKLET STAPLER B700-22
2) 1.16.2 BOOKLET STAPLER MOTOR B700-23

1. 2. DETAILS B700-24
2.1 GENERAL LAYOUT B700-24
2.2 ELECTRICAL COMPONENTS B700-26
1) 2.2.1 UPPER AREA B700/B701 ..... B700-26
2) 2.2.2 LOWER AREA B700/B701 ..... B700-27
3) 2.2.3 PUNCH UNIT B702 ..... B700-28
4) 2.2.4 STACKER/STAPLER - B700/B701 ..... B700-29
5) 2.2.5 B700 FOLD UNIT B700-30
6) 2.2.6 SUMMARY OF ELECTRICAL COMPONENTS B700-31
2.3 DRIVE LAYOUT B700-36
2.4 JUNCTION GATES B700-37
Proof Mode B700-37
Shift Mode B700-37
Staple Mode B700-37
2.5 PRE-STACKING B700-38
2.6 UPPER TRAY B700-40
2.7 LOWER TRAY (B700 ONLY) B700-42
2.8 CORNER STAPLING B700-44
1) 2.8.1 STACKING AND JOGGING B700-44
2) 2.8.2 STAPLER MOVEMENT B700-46
3) 2.8.3 CORNER STAPLING B700-48
2.9 BOOKLET STAPLING (B700 ONLY) B700-49
1) 2.9.1 BOOKLET PRESSURE MECHANISM B700-49
2) 2.9.2 BOOKLET STAPLING AND FOLDING B700-50
Overview B700-50
Booklet Stapling and Folding Mechanisms B700-56
2.10 UPPER TRAY OUTPUT B700-59
1) 2.10.1 FEED OUT B700-59
2) 2.10.2 FEED OUT STACKING B700-61
2.11 PUNCH UNIT B702 (FOR B700/B701) B700-62
1) 2.11.1 OVERVIEW OF OPERATION B700-62
2) 2.11.2 PUNCH MECHANISMS B700-65
Paper Position Detection B700-65
Punch Unit Movement B700-66
Punch Selection and Firing B700-67
1) 2.11.3 PUNCH HOPPER MECHANISM B700-68
2.12 FINISHER JAM DETECTION B700-69

Downloaded from www.Manualslib.com manuals search engine

COVER INTERPOSER TRAY

1. REPLACEMENT AND ADJUSTMENT B704-1
1.1 EXTERNAL COVERS B704-1
1.2 FEED UNIT AND PICK-UP ROLLER B704-2
1.3 FEED BELT B704-3
1.4 GUIDE PLATE ADJUSTMENT B704-4
1.5 MAIN BOARD B704-5
1.6 MOTOR REPLACEMENT B704-6
1.16.1 VERTICAL TRANSPORT MOTOR B704-6
1.16.2 BOTTOM PLATE LIFT MOTOR B704-6
1.16.3 FEED MOTOR, TRANSPORT MOTOR B704-7

2. DETAILS B704-8
2.1 OVERVIEW B704-8
2.1.1 MAIN LAYOUT B704-8
2.1.2 DRIVE LAYOUT B704-9
2.1.3 PAPER SIZE DETECTION B704-10
2.1.4 PAPER PATH B704-13
2.2 PAPER FEED B704-14
Power On B704-14
Paper Separation and Feed B704-14
Bottom Tray Lift B704-14
Paper Near-end B704-14
Paper End B704-14

3000-SHEET FINISHER

1. REPLACEMENT AND ADJUSTMENT B706-1

2. PREVENTIVE MAINTENANCE B706-2

3. REPLACEMENT AND ADJUSTMENT B706-3
3.1 DOOR AND COVER REPLACEMENT B706-3
Front Door B706-3
Left Inner Cover B706-3
Inner Cover B706-3
Side Table and Upper Tray B706-4
Left Covers B706-5
Rear Cover and Top Cover B706-5
Shift Tray B706-5
3.2 ROLLERS B706-6
3.2.1 SHIFT POSITIONING ROLLER B706-6
3.2.2 POSITIONING ROLLER B706-7
3.2.3 ALIGNMENT BRUSH ROLLER B706-8
3.3 STACK FEED-OUT BELT B706-9
3.4 JOGGER FENCE B706-10

Downloaded from www.Manualslib.com manuals search engine

3.5 SENSORS B706-11
3.5.1 STACK HEIGHT 1, 2 AND EXIT GUIDE OPEN SENSOR B706-11
Stack Height Sensors 1 and 2 ..... B706-11
Exit Guide Open Sensor B706-11
3.5.2 UPPER TRAY PAPER LIMIT AND EXIT SENSOR B706-12
Upper Tray Paper Limit Sensor B706-12
Upper Tray Exit Sensor B706-12
3.5.3 SHIFT TRAY EXIT SENSOR B706-13
3.5.4 ENTRANCE AND STAPLER TRAY ENTRANCE SENSORS .. B706-14
Entrance Sensor B706-14
Stapler Tray Entrance Sensor B706-14
3.5.5 PRE-STACK PAPER SENSOR B706-15
3.5.6 STAPLE WASTE HOPPER SENSOR B706-16
3.5.7 STAPLER ROTATION HP AND
STAPLER RETURN SENSORS B706-17
3.6 STAPLER B706-18
3.7 SHIFT TRAY MOTOR B706-19
3.7.1 STACKING ROLLER / ROLLER DRAG MOTORS,
RETURN HP SENSOR B706-20
3.8 Z-FOLD JOGGER UNIT B706-23
3.8.1 Z-FOLD JOGGER UNIT COVER B706-23
3.8.2 Z-FOLD JOGGER UNIT B706-24
3.8.3 JOGGER TOP FENCE MOTOR B706-25
3.8.4 JOGGER BOTTOM FENCE MOTOR B706-26
3.9 PUNCH UNIT (B531) B706-27
3.9.1 PUNCH POSITION ADJUSTMENT B706-27
Front to Rear Adjustment B706-27
Right to Left Adjustment B706-27
3.10 JOGGER UNIT (B513) B706-28
3.10.1 JOGGER UNIT B706-28
3.10.2 JOGGER UNIT PCB B706-29
3.10.3 JOGGER UNIT MOTOR B706-30

4. TROUBLESHOOTING B706-31

5. SERVICE TABLES B706-32
5.1 DIP SWITCHES B706-32
5.2 TEST POINTS B706-32
5.3 FUSES B706-32

6. DETAILS B706-33
6.1 TRAY AND STAPLER JUNCTION GATE B706-33
6.2 PAPER PRE-STACKING B706-34
6.3 JOGGER UNIT PAPER POSITIONING B706-35
6.4 STAPLER UNIT MOVEMENT B706-36
Side-to-Side B706-36
Rotation (1) B706-37
Rotation (2) B706-37
6.5 STAPLER B706-38

Downloaded from www.Manualslib.com manuals search engine

6.6 FEED-OUT B706-40
6.7 PAPER EXIT STACKING B706-41
6.8 SHIFT TRAY B706-42
6.8.1 OVERVIEW B706-42
Stand-by Mode B706-42
6.8.2 SHIFT TRAY UP/DOWN MOVEMENT B706-43
Sort/Stack Mode (Shift Mode) B706-43
Staple Mode B706-43
6.8.3 SHIFT TRAY LOWER LIMIT DETECTION B706-44
6.9 SHIFT TRAY SIDE-TO-SIDE MOVEMENT B706-45
6.10 STAPLING Z-FOLDED PAPER B706-46
6.11 JAM CONDITIONS B706-47
6.12 PUNCH UNIT (B531) B706-48
6.12.1 PUNCH UNIT DRIVE B706-48
6.12.2 PUNCH WASTE COLLECTION B706-49
6.13 JOGGER UNIT(B513) B706-50
6.13.1 JOGGER UNIT MECHANICAL LAYOUT B706-50
6.13.2 JOGGER UNIT DRIVE B706-51

7. OVERALL MACHINE INFORMATION B706-52
7.1 MECHANICAL COMPONENT LAYOUT B706-52
7.2 ELECTRICAL COMPONENT DESCRIPTION B706-53
7.3 DRIVE LAYOUT B706-56

9-BIN MAILBOX

1. REPLACEMENT AND ADJUSTMENT B762-1
1.1 COVERS AND TRAYS B762-1
1.2 SENSORS B762-2
1.3 MAIN MOTOR AND CONTROL BOARD B762-3

2. DETAILS B762-4
2.1 OVERVIEW B762-4
2.1.1 MAIN COMPONENT LAYOUT B762-4
2.1.2 DRIVE LAYOUT B762-5
2.1.3 PAPER PATH B762-6
2.2 BASIC OPERATION B762-7
2.2.1 PAPER PATH B762-7
2.3 OVERFLOW DETECTION B762-8
2.3.1 OVERVIEW B762-8
2.3.2 DETECTION TIMING B762-9
2.4 PAPER MISFEED DETECTION TIMING B762-10
2.4.1 A4 SIDEWAYS (LEF) → 1ST BIN TRAY B762-10
2.4.2 A4 SIDEWAYS (LEF) → 2ND ~ 9TH BIN TRAY B762-10

Downloaded from www.Manualslib.com manuals search engine

SPECIFICATIONS SPEC-1
1. MAINFRAME SPEC-1
1.1 COPYING SPEC-1
Paper Sizes SPEC-3
1.2 PRINTING SPEC-4
1.3 SCANNER SPEC-5
2. ARDF SPEC-6
3. OPTIONAL PERIPHERALS SPEC-7
3.1 LARGE CAPACITY TRAY B473 ..... SPEC-7
3.2 8½ X 14" PAPER SIZE TRAY B474 ..... SPEC-7
3.3 9-BIN MAILBOX B762 ..... SPEC-8
3.4 COVER INTERPOSER TRAY B704 ..... SPEC-8
3.5 3000-SHEET FINISHER B706 ..... SPEC-9
3.6 PUNCH UNIT B531 ..... SPEC-10
3.7 3000-SHEET FINISHER B701 ..... SPEC-11
3.8 2000-SHEET FINISHER B700 ..... SPEC-13
3.9 PUNCH UNIT B702 ..... SPEC-15
3.10 A3/11" X 17" TRAY B331 ..... SPEC-16
3.11 COPY TRAY B756 ..... SPEC-16
4. MACHINE CONFIGURATION SPEC-17
4.1 ELECTRICAL COMPONENTS SPEC-18
4.1.1 COPIER SPEC-18
4.1.2 ARDF SPEC-31

APPENDIX

Downloaded from www.Manualslib.com manuals search engine

1. INSTALLATION

1.1 INSTALLATION REQUIREMENTS

1.1.1 OPERATING ENVIRONMENT

1.	Temperature Range:	Recommended Temp.: 23°C (73.4°) Allowed Temp.: 10°C to 32°C (50°F to 90°F) *1
2.	Humidity Range:	15% to 80% Rh
3.	Ambient Illumination:	Less than 1,500 lux (do not expose to direct sunlight or strong light.)
4.	Ventilation:	Air must be replaced a minimum of 3 times per hour
5.	Ambient Dust:	Less than 0.10 mg/m^3

*1 If the machine is installed in a location where the ambient temperature is more that 30°C (86°F):

- Do not run full color copying longer than 2 hours.
- Never turn the main power switch off immediately after a long copy job. Leave the machine on so the fans can expel the hot air from the machine and cool the electronic components.

Temperature and Humidity for Operation

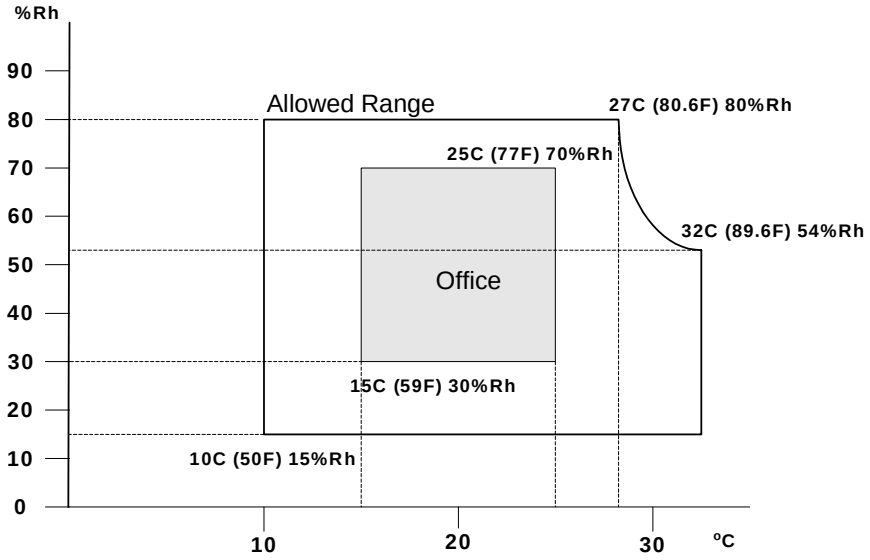

Recommended Temp., Humidity: 23°C (73.4°F) 50% Rh

B132I900.WMF

Downloaded from www.Manualslib.com manuals search engine

6. If the installation area has air-conditioners or heaters, put the machine in a location that agrees with these conditions:
    a) Where there are no sudden temperature changes from low to high, or high to low.
    b) Where it will not be directly exposed to cool air from an air conditioner in the summer.
    c) Where it will not be directly exposed to reflected heat from a heater in the winter
7. Do not put the machine where it will be exposed to gases that can cause corrosion.
8. Put the copier on a strong and level surface. The front and rear of the machine must be less than ±5 mm (0.2") away from level.
9. Do not put the machine where there could be strong vibrations.
10. Do not connect the machine to the same power source as other electrical devices.
11. The machine can make an electromagnetic field, and this can cause interference with radio or television reception.

1.1.2 MACHINE LEVEL

1. Front to rear: Less than ±5 mm (0.2") away from level
2. Right to left: Less than ±5 mm (0.2") away from level

The machine legs can be turned to adjust them up or down, to make the machine level. Put a carpenter's level on the exposure glass.

Downloaded from www.Manualslib.com manuals search engine

1.1.3 MINIMUM SPACE REQUIREMENTS

Put the copier near the power source. Minimum clearance must be as shown below. The same amount of clearance is necessary when optional peripheral devices are installed.

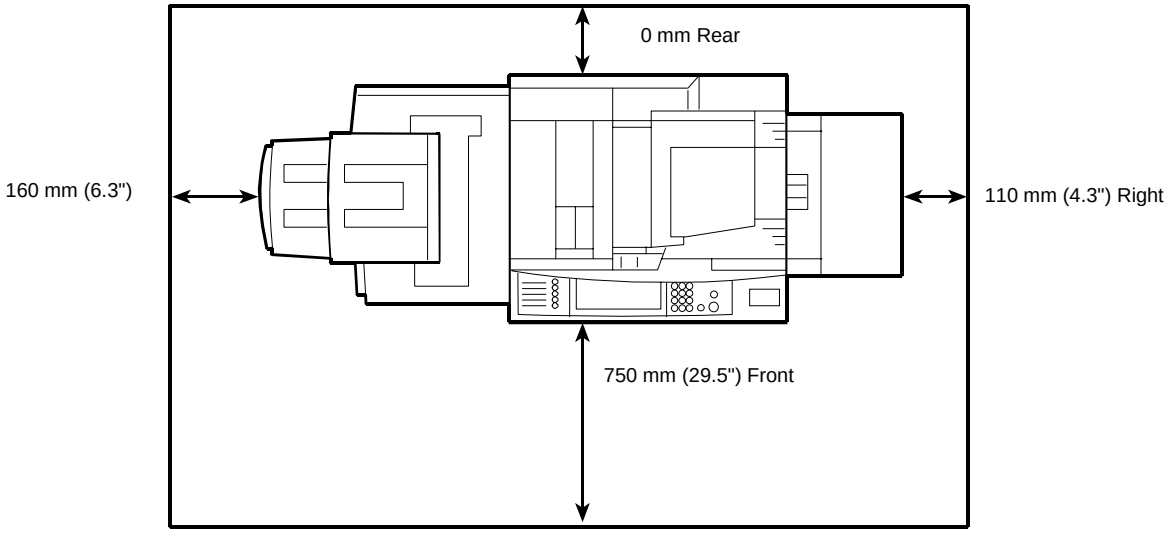

B132I111.WMF

Downloaded from www.Manualslib.com manuals search engine

1.1.4 DIMENSIONS

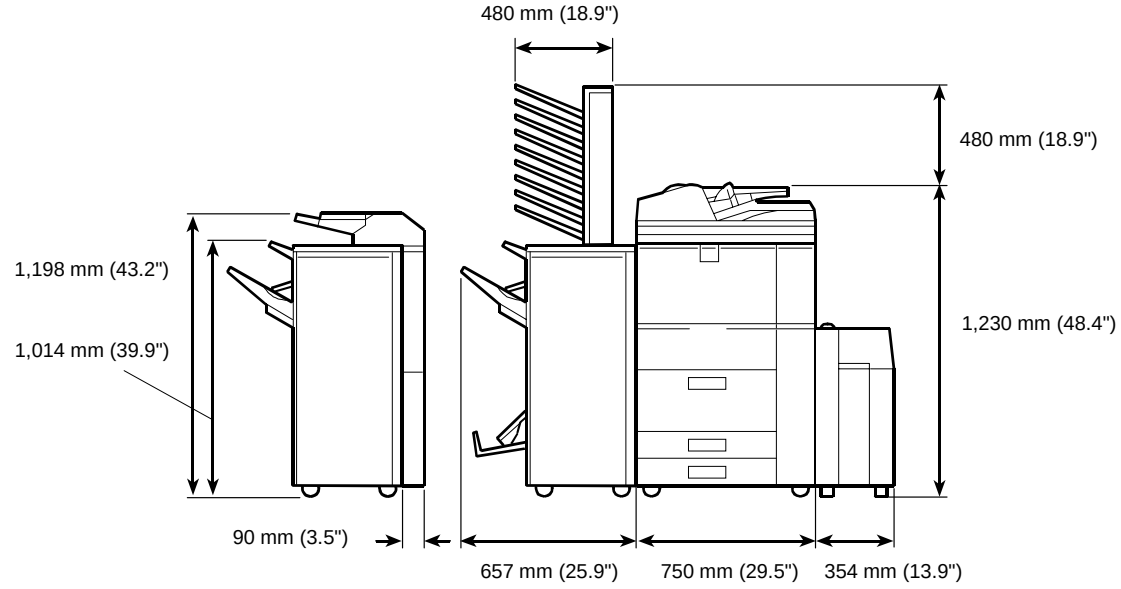

B132I112.WMF

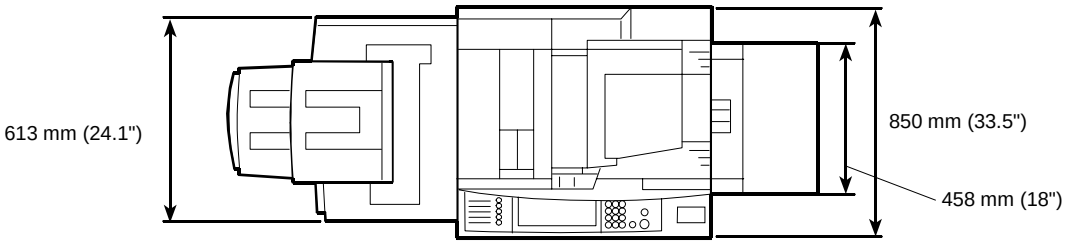

B132I113.WMF

Downloaded from www.Manualslib.com manuals search engine

1.1.5 POWER REQUIREMENTS

⚠WARNING!

1. Make sure that the wall outlet is near the main machine and that you can get access to it easily. Make sure the plug is tightly connected to the outlet.

2. Do not connect more than one electrical device to the same power outlet.

3. Be sure to ground the machine.

4. Do not put objects on the power cord.

Input voltage level	North America 120 V, 60 Hz: More than 20 A
Permissible voltage fluctuation	±10%

⚠CAUTION

Do not turn off the main power switch when the power LED is lit or flashing. To prevent damage to the hard disk or memory, push the operation switch to turn the power off, then do nothing until the power LED goes off, and then turn the main power switch off.

There are two power switches on the machine:

- **Main Power Switch**.
  This is located on the front left corner of the machine and has a plastic cover. This switch must always be on unless a technician does work on the machine.
- **Operation switch**.
  This is located on the right side of the operation panel. This is the switch that the customer uses to turn the machine on and off.

Downloaded from www.Manualslib.com manuals search engine

1.2 COPIER AND PERIPHERALS

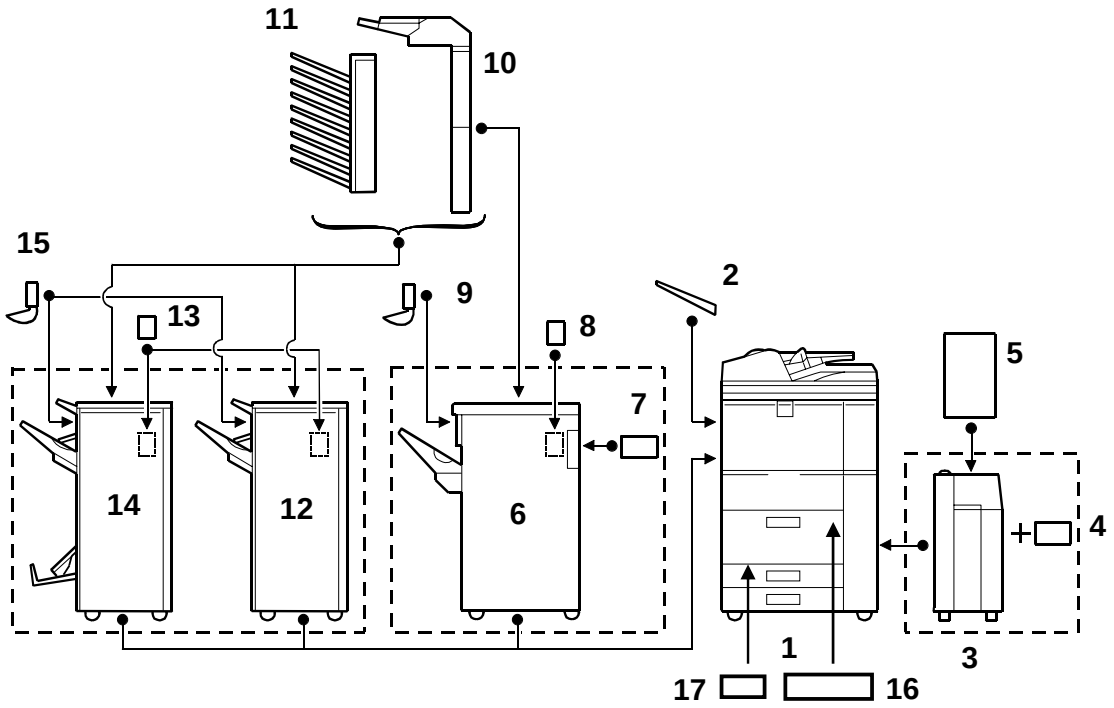

This is a list of the peripheral devices that can be installed with the copier.

No.	Model	Name	Comments
1	B132 B200	e-STUDIO4500c e-STUDIO5500c	Main machine (Copier)
2	B756	Copy Tray Type 2075	Attached to main machine
3	B473	LCT RT43	Large capacity tray
4	B699	LCT Adapter Type B	Required for LCT
5	B474	8 1/2" x 14"/B4 Paper Size Tray Type 1075	LCT Option
6	B706	3000-Sheet Finisher SR842	No saddle-stitching (100-sheet stapling)
7	B698	Finisher Adapter Type B	Replacement motor for B706
8	B531	Punch Unit Type 1075	For B706 only
9	B513	Output Jogger Unit Type 1075	For B706 only.
10	B704	Cover Interposer Tray Type 3260	For B700, B701, B706
11	B762	Mailbox CS391	For B700, B701 only
12	B701	3000-Sheet Finisher SR970	No saddle-stitching, Tray x1, 50-sheet stapling
13	B702	Punch Unit Type 3260	For B700, B701
14	B700	2000-Sheet Booklet Finisher SR4000	Saddle-stitching, Trays x2, 50-sheet stapling
15	B703	Output Jogger Unit Type 3260	For B700, B701
16	B331	A3 /11"x17" Paper Size Tray Type 2105	For Tandem Tray (Tray 1)
17	B499	Tab Sheet Holder Type 3260	
-	B328	Copy Connector Type 3260	
-	B735	DataOverwriteSecurity Unit Type C	
-	B761	PostScript3 Unit Type 3260	
-	B737	Printer/Scanner Unit GM-2100	
-	G815	EFI Printer Controller E-7000	

Downloaded from www.Manualslib.com manuals search engine

1.3 COPIER e-STUDIO4500c/5500c

1.3.1 ACCESSORIES

Check the accessories and their quantities against this list.

Description	Q'ty
1. Instructions Pocket	1
2. Exposure glass cloth holder	1
3. Exposure glass cloth	1
4. Leveling Shoes	4
5. PCU stand	1
6. PCU Caps Set (Not Used)*1	1
7. Lock Plate: Development Roller (attached #5)	1
8. Development Roller Gear (attached with #5)	1
9. Lock Plate: Drum Shaft (attached with #5)	1
10. PCU Stand Holder	1
11. Decal: Paper Loading	1
12. Decal: Paper Size	1

*1 Attach the PCU caps to the PCU toner ports before you return PCUs to the factory. They are not used during installation or servicing.

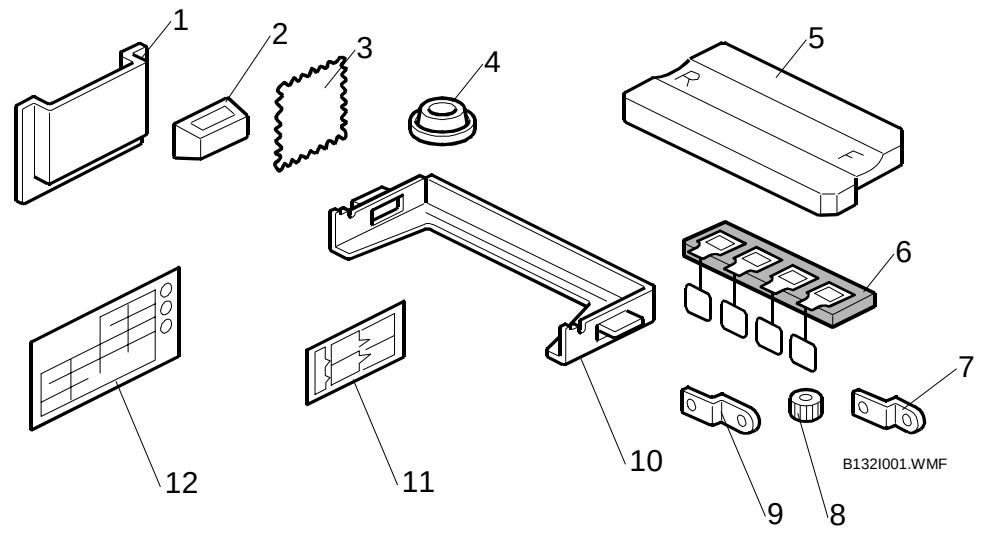

Downloaded from www.Manualslib.com manuals search engine

1.3.2 INSTALLATION

Tapes and packing material

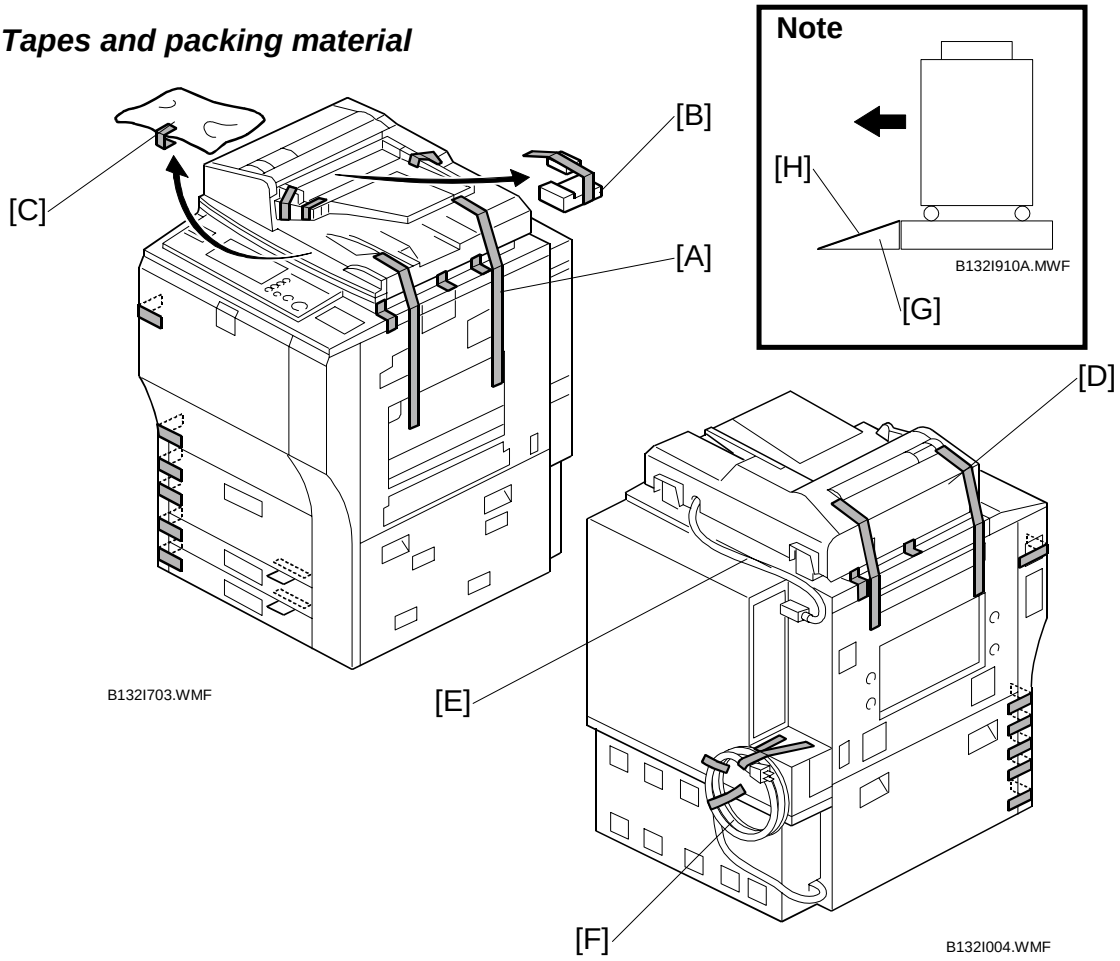

⚠WARNING!
Always turn the machine off and disconnect the machine power cord before you do these procedures.

Note
Be sure to place slanted support [G] made of cardboard with its hard side [H] up when unloading the copier from the pallet using it.

Remove all tapes and packing material from the main machine:

[A]: ARDF, right side
[B]: Packing block inside ARDF
[C]: Accessories bag. Remove other accessory bags from Tray 2, Tray 3.
[D]: ARDF, left side
[E]: ARDF connector cord. Remove tape and connect the cord
[F]: Power cord

Downloaded from www.Manualslib.com manuals search engine

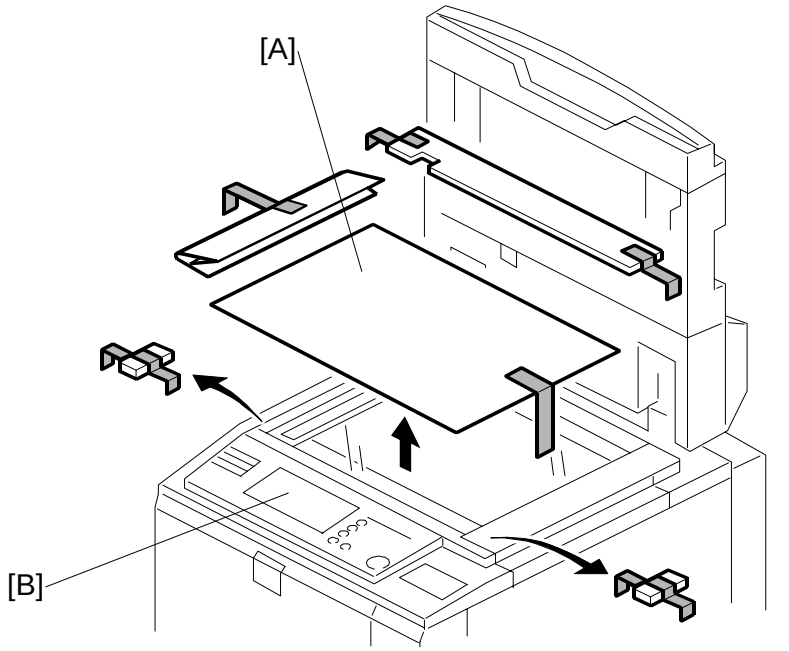

[A]: Under ARDF
[B]: Operation panel film

Downloaded from www.Manualslib.com manuals search engine

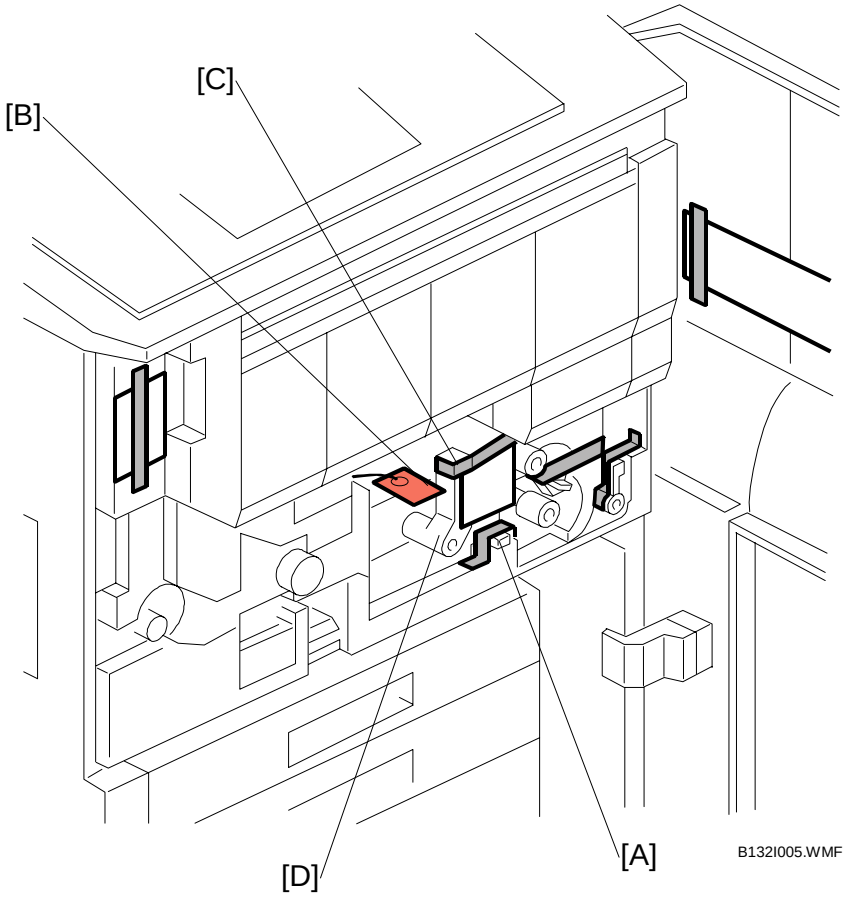

1. Open the front door and, and remove the transfer belt release lever [A] (1 tape).
   We will install this in the correct location later.

Important

- **DO NOT TOUCH [B], [C], OR [D] AT THIS TIME. THESE ITEMS ARE REMOVED AFTER YOU REMOVE THE FACE PLATE.**
- **TO PREVENT DAMAGE TO THE ITB, NEVER TURN DOWN LEVER [D] TO PULL OUT THE DRAWER UNIT UNTIL AFTER YOU HAVE REMOVED THE ROD WITH THE RED TAG AND WIRE [B]. THE DRAWER MUST REMAIN INSIDE THE MACHINE UNTIL AFTER THE DEVELOPER IS INSTALLED IN THE DEVELOPER CARTRIDGES OF THE PCUS.**
- **THE ROD IS REMOVED AFTER THE FACE PLATE IS REMOVED TO INSTALL THE DEVELOPER CARTRIDGES. (☛PG.1-12)**

Downloaded from www.Manualslib.com manuals search engine

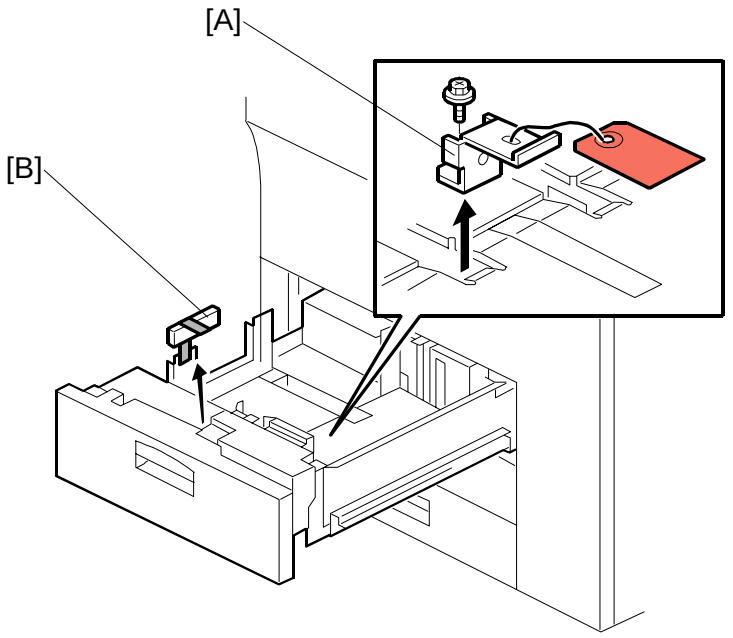

B132I102.WMF

2. From Tray 1 remove:
   [A]: Block, tape
   [B]: Retainer, tag, wire (☞ x1)
3. Remove all retainers and accessories from Trays 2, Tray 3.

Downloaded from www.Manualslib.com manuals search engine

Shipping Retainer Removal

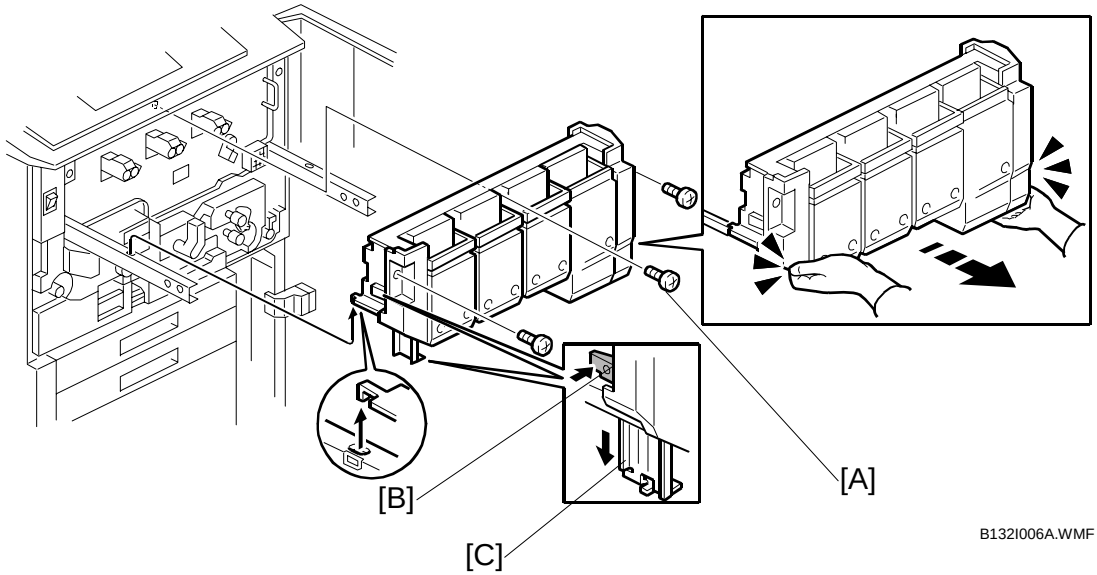

1. Prepare an open space on the floor for the hopper.
2. Remove the screws of the toner hopper cover [A] (x 3).
3. Put your hands under the left and right corners of the toner hopper, and slowly pull it out on its rails until it stops.
4. Push the lock [B] then pull down the support leg [C].
5. Make sure that the support leg is down and locked.

> **⚠CAUTION**
> **Always make sure that the support leg is down and locked before you remove the hopper.**

6. Hold the toner hopper using the handles at the top left and right sides. Then lift the toner hopper off its rails and set it on the floor.

> **⚠CAUTION**
> **The hopper is heavy! Lift it carefully. Make sure that it disengages fully from the rails on the left and right, and then set it on the floor.**

7. Push the hopper rails into the machine.
   NOTE: Push in the rails until approximately an inch is out of the machine. If you push the rails in fully, you must use a pair of needle-nose (radio) pliers to pull them out again.

Downloaded from www.Manualslib.com manuals search engine

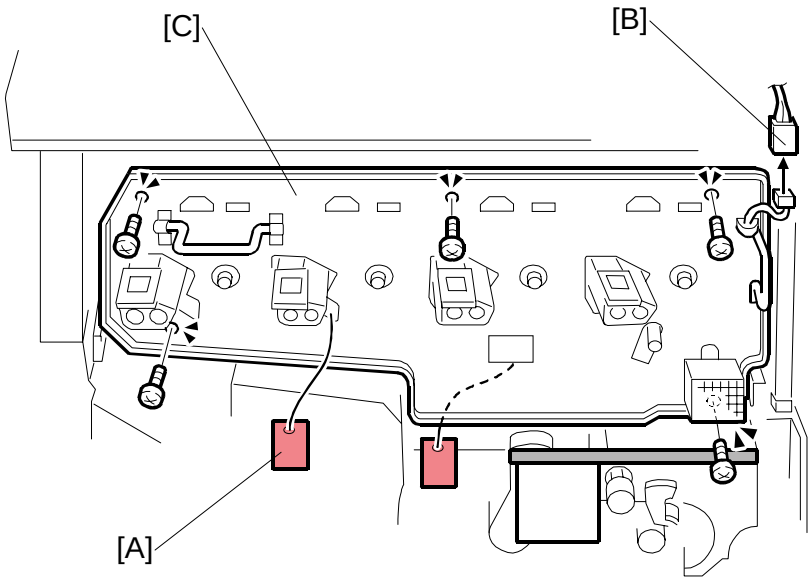

B132I715.WMF

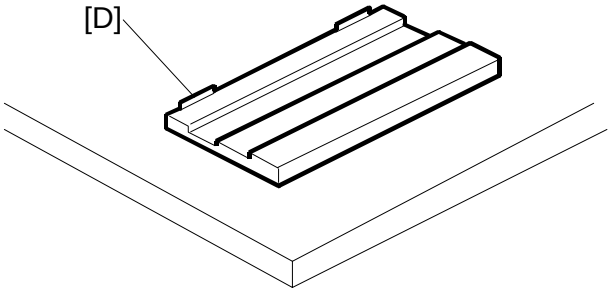

B132I902.WMFF

8. Remove the tag, and rod [A] (🔩 x 1).
9. Disconnect the fan connector [B].
10. Remove the face plate [C] (🔩 x 5).
11. Put the PCU stand [D] on a flat, clean surface.
12. Use a clean cloth to remove dust from the surface of the stand.

Downloaded from www.Manualslib.com manuals search engine

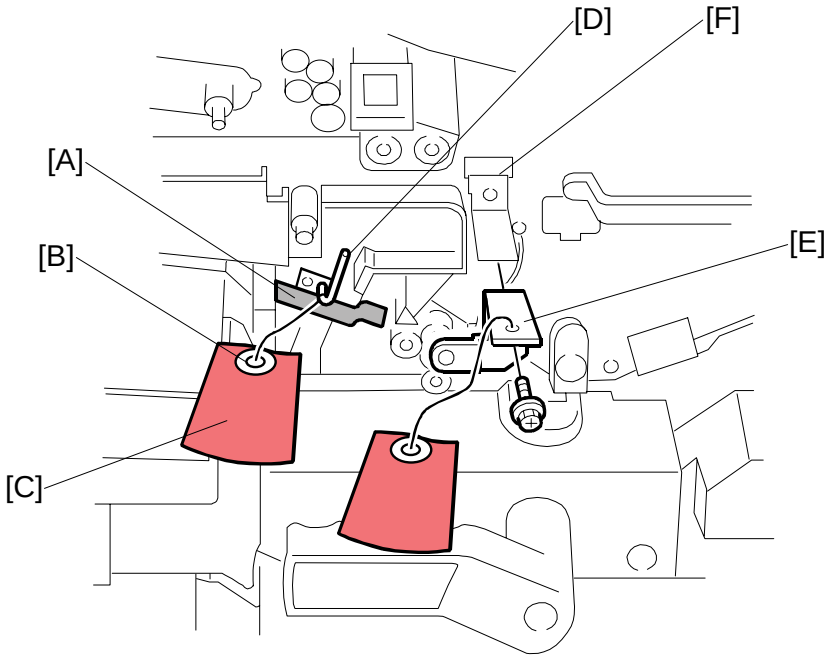

B132I723.WMF

Important:

- **DO NOT TRY TO PULL OUT THE DRAWER UNIT UNTIL AFTER YOU REMOVE THE FOLLOWING RETAINERS.**

13. Remove the tape [A].
14. Pull on the reinforced part [B] on tag [C] to remove the stabilizing rod [D].
    NOTE: If you do not pull on the reinforced part [B], you will tear the tag or pull the wire off.
15. Remove the bracket [E], red tag, and wire (x1).
    NOTE: Do not remove bracket [F].

Downloaded from www.Manualslib.com manuals search engine

Developer Cartridge Installation

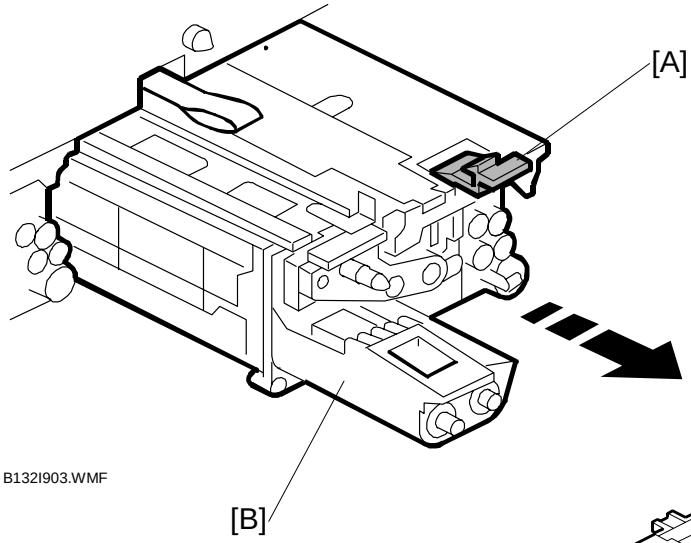

B132I903.WMF

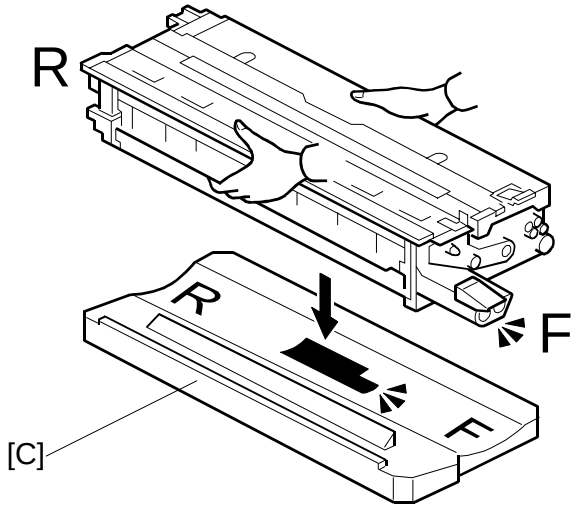

B132R214.WMF

Important

- **The OPC drum is exposed on the bottom of the PCU.**
- **Do not put your hand under the PCU when you hold the PCU.**
- **Always use the PCU stand. Do not put the PCU on other surfaces.**

1. Push down the tab [A] above the Yellow PCU.
2. Hold the Yellow PCU [B] by its sides, and pull it out of the machine.
3. Set the PCU on the PCU stand [C]. (In the diagram, F is ‘front’, R is ‘rear’.)
4. Put a piece of clean paper on top of the PCU to protect the drum from light.

Downloaded from www.Manualslib.com manuals search engine

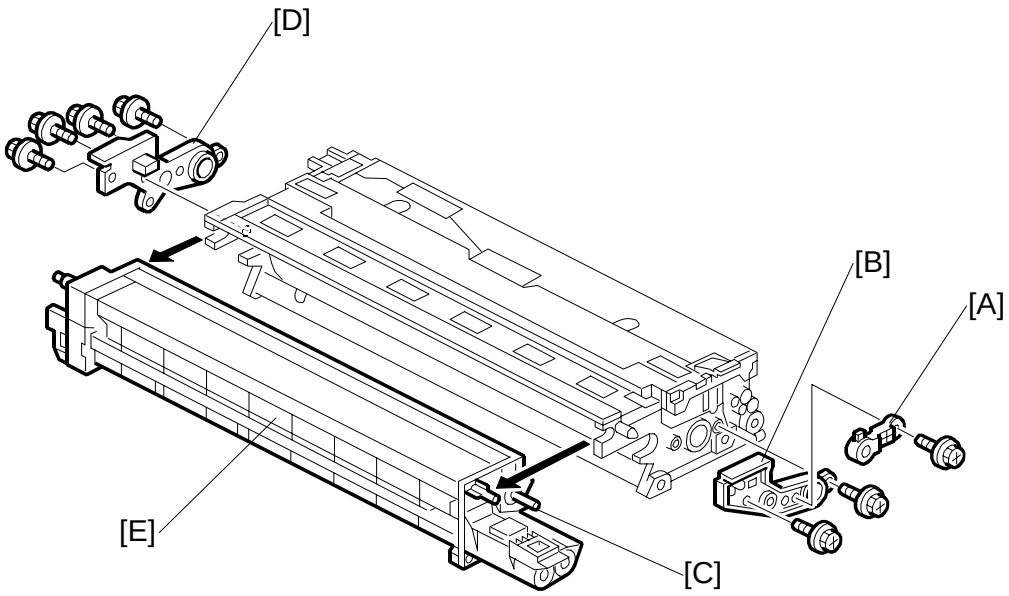

B132R210.WMF

5. On the front end of the PCU, remove the shaft cap [A] and lock plate [B] (x 3).
   Important: After you remove the shaft cap, make sure that you do not turn the shaft [C] of the development roller.
6. On the rear end of the PCU, remove the lock plate [D] (x 4).
7. Remove the development unit [E] from the PCU.

Downloaded from www.Manualslib.com manuals search engine

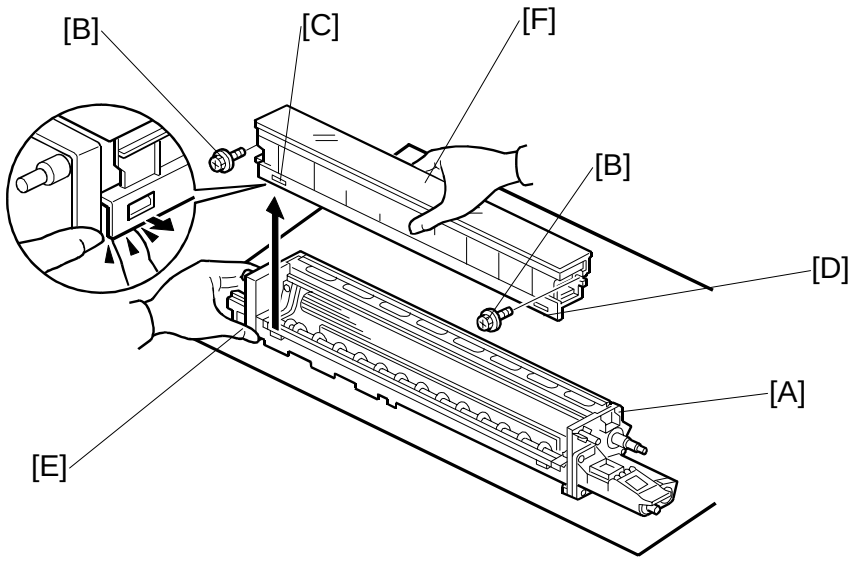

B132I105.WMF

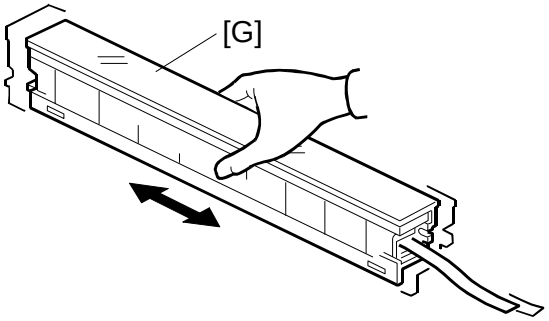

B132I105A.WMF

8. Place the development unit [A] on a clean sheet of A3/DLT paper [B].
9. Remove the screws from the dummy cartridge [B] (🔩 x 2).
10. With a fingernail, release the tabs on the left [C] and right [D].

    Important: The development unit is top-heavy and falls easily. Hold it on the left side.
11. While holding the unit steady with one hand on the left [E], remove the dummy cartridge [F] from the development unit.
12. Shake the new yellow developer cartridge [G] from side to side about 6 times.

Downloaded from www.Manualslib.com manuals search engine

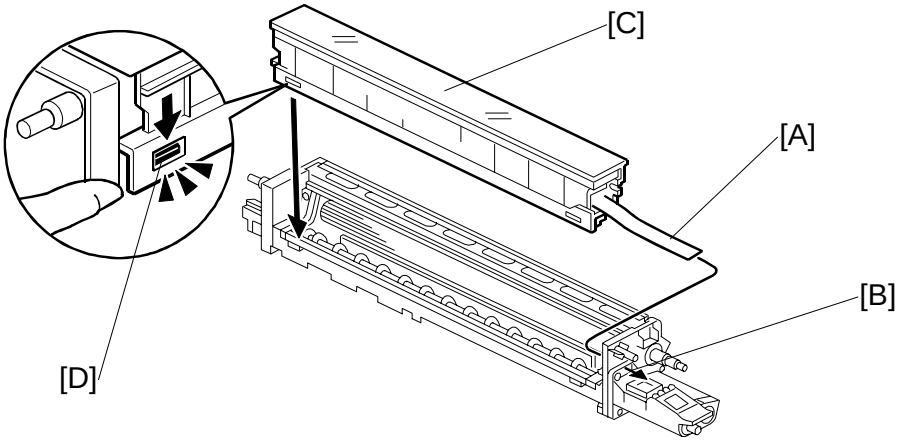

B132I106.WMF

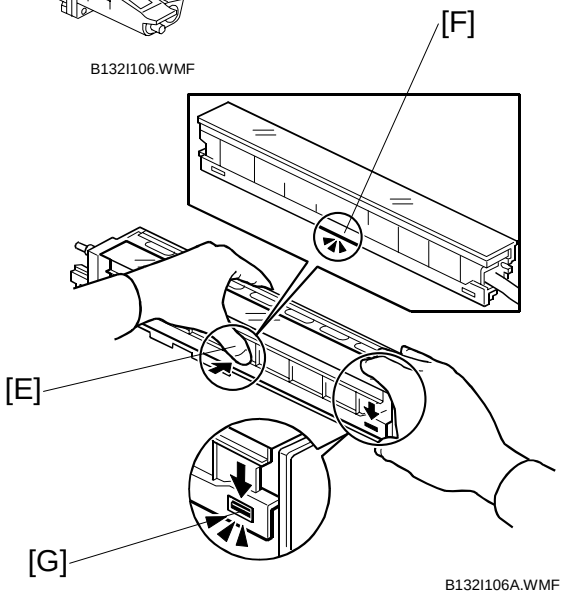

B132I106A.WMF

13. Thread the film seal [A] through hole [B].
14. Slide the developer cartridge down [C] on the left so the holes and tabs [D] are aligned.
15. Press in on the middle of the developer cartridge [E] to lock the tabs inside [F].
16. Press down on the right end of the developer cartridge until the tabs [G] on the right lock.

Downloaded from www.Manualslib.com manuals search engine

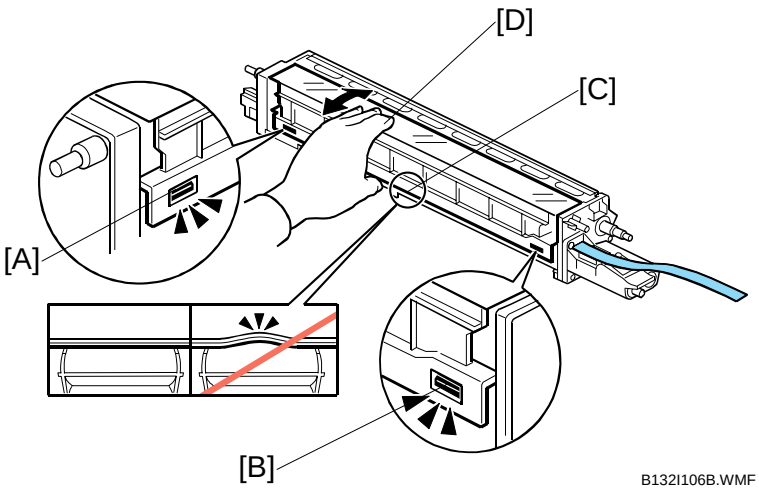

B132I106B.WMF

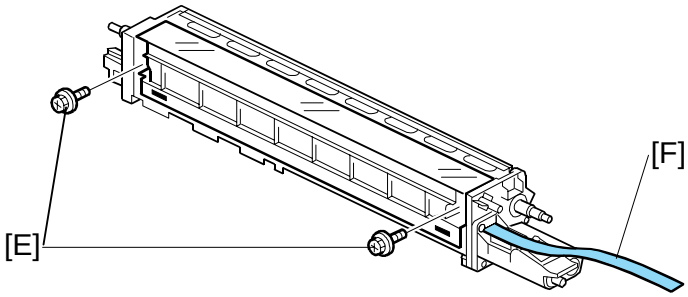

B132I106C.WMF

17. Check the following to points to be sure that the developer cartridge is set properly.
    - Tabs [A] and [B] should be locked.
    - The developer cartridge edge [C] should be flat and not bulging or floating away from the side of the development unit
    - Pull gently on the developer cartridge at [D] to make sure that it does not part from the development unit.
18. Fasten the cartridge [E] (x2).

    IMPORTANT: DO NOT REMOVE THE FILM SEAL [F] ON THE DEVELOPER CARTRIDGE AT THIS TIME.

Downloaded from www.Manualslib.com manuals search engine

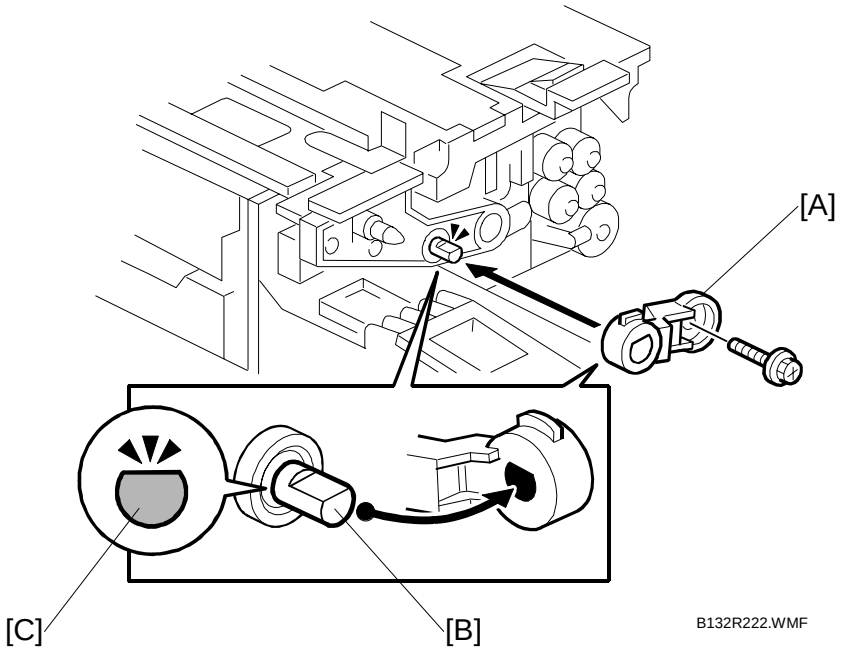

Reassemble the PCU

1. Attach the shaft cap [A].
   If you cannot attach the cap, then check the end of the development roller shaft [B]. The flat side of the shaft must point up and must be level.

   Important

   - When you turn the shaft:
     a) Use your fingers to turn the front and rear ends of the development roller shaft until the end of the shaft is as shown [C].
     b) Make sure that you hold the shaft and not the sleeve (the sleeve does not turn).
     c) To prevent damage to the shaft, do not hold the end of the shaft with pliers.

2. Reattach the development unit to the PCU.

   Important!

   - **HANDLE THE DEVELOPMENT UNIT CAREFULLY WHEN YOU REATTACH IT TO THE PCU TO AVOID DAMAGING THE DRUM INSIDE THE PCU.**

Downloaded from www.Manualslib.com manuals search engine

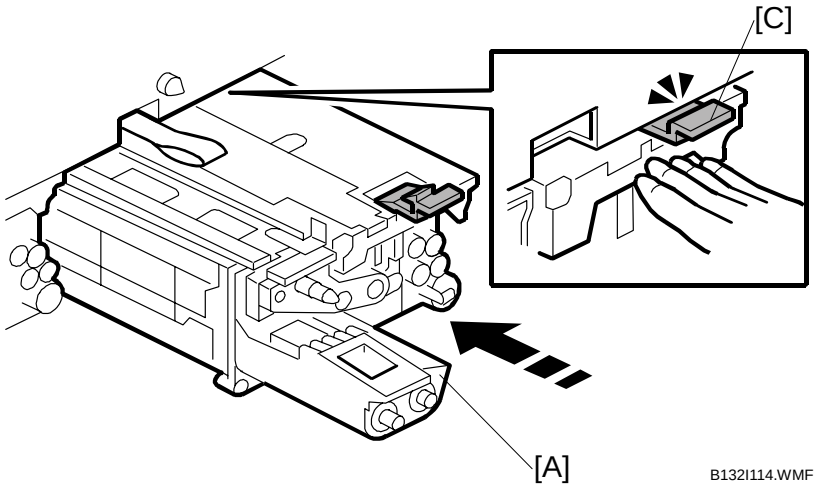

B132I114.WMF

3. Hold the PCU [A] in front of the slot where you removed it.
4. Engage the rails [B] with the slots in the sides of the PCU.
5. Slowly push the PCU into the slot. Make sure the tab [C] above the PCU is locked.

   NOTE: If the PCU does not go in smoothly, make sure the rails [B] and grooves are engaged correctly.

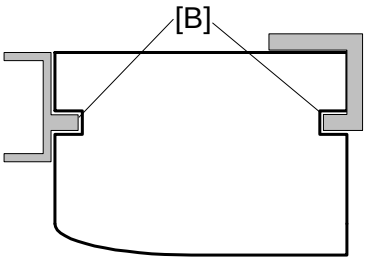

B132I905.WMF

6. To release the developer into the PCU, pull out the film seal [D].

   NOTE: Put your other hand on the PCU [E] to keep it stable it while you pull on the film seal.
7. Repeat Steps Page 1-15 to 1-21 for the other PCUs (Cyan, Magenta, Black).

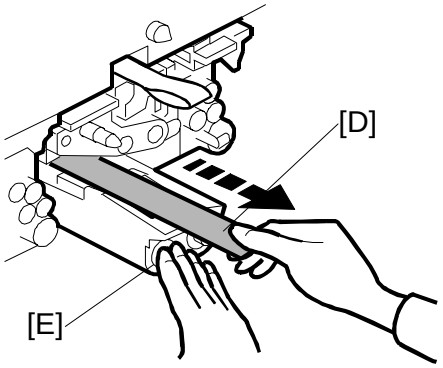

B132I101.WMF

Downloaded from www.Manualslib.com manuals search engine

Reattach the Face Plate

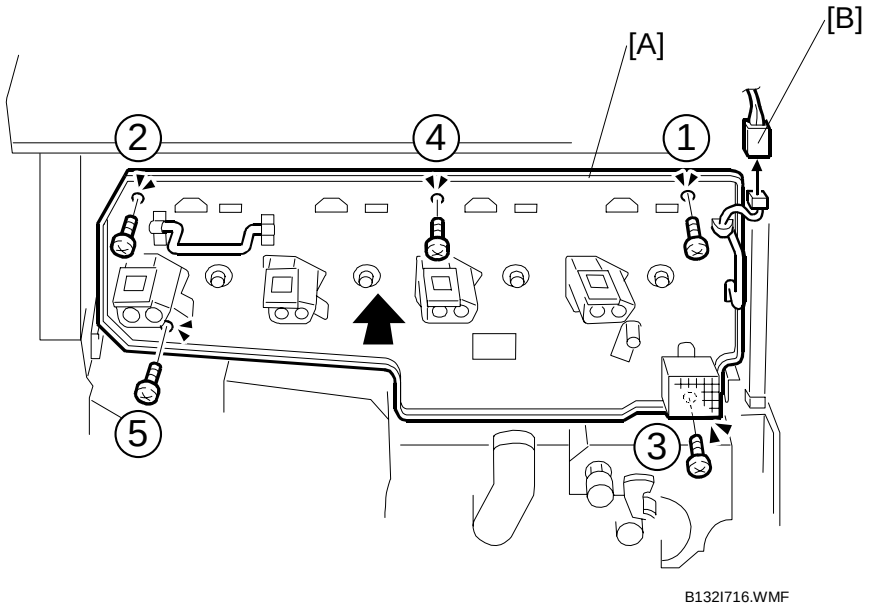

1. Attach the face plate [A] with the screws in the sequence shown by the numbers above (x 5).

   Important:

   - Do not tighten these screws too much.
   - Make sure the fan connector [B] is not pinched behind the face plate.

2. Connect the fan again [B] (x 1).

Downloaded from www.Manualslib.com manuals search engine

Remove the Retainers in the Drawer Unit

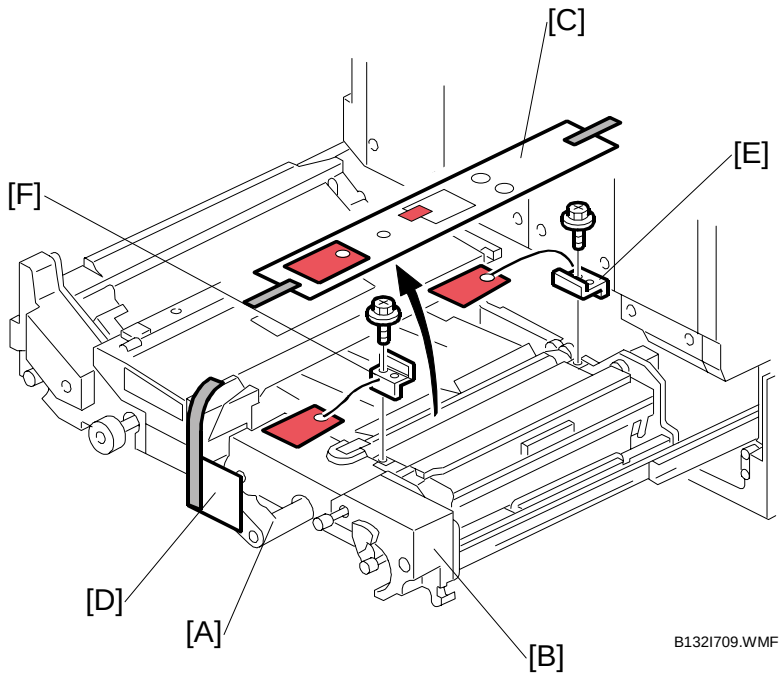

1. Turn the lever [A] counter-clockwise, and pull the drawer unit [B] out of the machine until it stops.
2. Remove the instruction sheets [C] and [D].
3. Remove the bracket and tag [E] at the rear.
4. Remove the bracket and tag [F] at the front.

Important

- A sheet of paper protects the ITB if you accidentally pull the drawer out without first removing the rod. Do not push the drawer into the machine. Follow the procedure on the instruction sheet to remove the rod and paper.

Downloaded from www.Manualslib.com manuals search engine

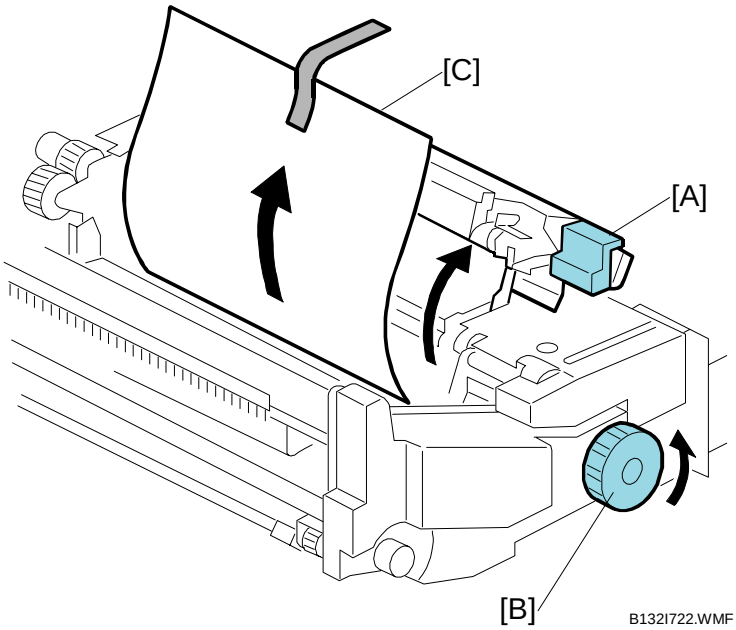

5. Raise lever **D2** [A].
6. Turn knob **D1** [B] in the direction shown by the arrow.
7. Remove protective sheet [C].
8. Lower lever **D2** [A].
9. Push the drawer into the machine until it stops.
10. Rotate handle **B2** up and to the right until it stops.

Downloaded from www.Manualslib.com manuals search engine

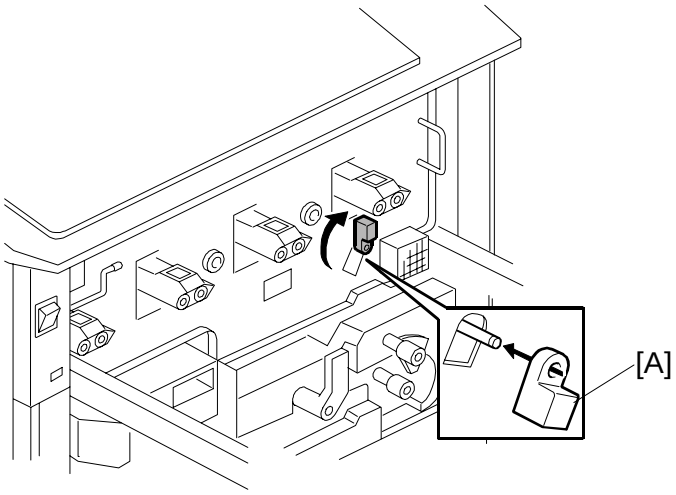

B132I707.WMF

11. Locate the transfer belt release lever [A]. It was removed earlier with the shipping tape.
12. Attach the transfer belt release lever.
13. Turn it to the vertical position and make sure that it locks.

Important:

- The transfer belt release lever must be turned up and locked in position before you install the toner hopper.
- **IF YOU FORGET TO ATTACH THE TRANSFER BELT RELEASE LEVER [A], THIS WILL CAUSE AN ID SENSOR ERROR (SC410 TO SC413).**

Downloaded from www.Manualslib.com manuals search engine

Reinstall the Toner Hopper

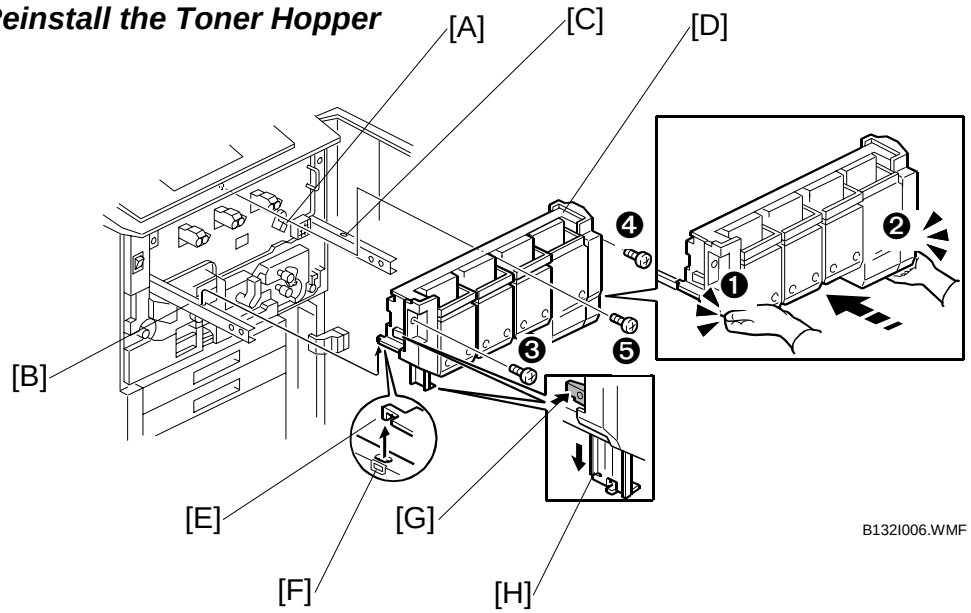

1. Make sure that the transfer belt release lever [A] is up and locked before you attach the hopper.
2. Pull the toner hopper left rail [B] and right rail [C] until they are fully extended.
   NOTE: If the rails were pushed in fully, it could be necessary to use a pair of needle-nose pliers to pull them out of the machine.
3. Set the toner hopper [D] on the rails.
   Important: Make sure the steel tabs [E] of the hopper are put fully into the left rail hole and the right rail hole [F].
4. Push the lock [G] and push the support leg [H].
   Important: Make sure that the support leg is up and locked before you push the toner hopper into the machine.
5. Put your hands at the bottom of the toner hopper at ❶ and ❷ and then push the hopper into the machine against the face plate.
   Important: To prevent damage to the hopper, do not push the top of the toner hopper when you do this step.
6. Make sure that the hopper is flat against the face plate on the right side.
   NOTE: If the toner hopper [D] is not flat against the face plate on the right side, pull it out a short distance and make sure that the transfer belt release lever is turned up fully.
7. Attach the toner hopper (x 3). Attach the screws in this sequence: ❸❹❺

Downloaded from www.Manualslib.com manuals search engine

STC (Soft Toner Cartridge) Installation

Important:

- Make sure that you install each STC in the correct bin.
- The label on the toner cartridge must face the front of the machine.
- From left to right, the bins are for Yellow→ Cyan→ Magenta→ Black.
- The name of the color for each bin is on the decals that are attached to the bin release levers.

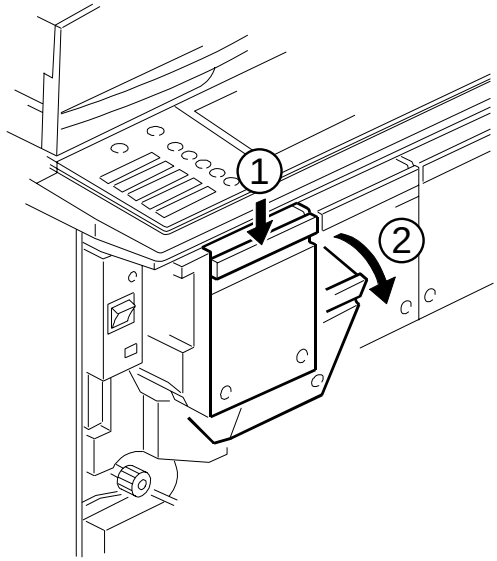

B132I107.WMF

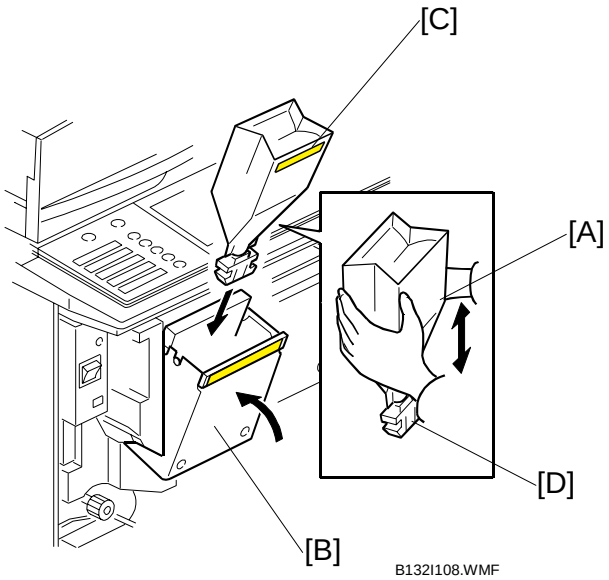

B132I108.WMF

1. Push down the lock lever ① on the top edge of the Yellow bin (the bin at the far left) to release it. Then pull the bin ② in the direction of the front to open it.

   Important: To prevent damage to the bin door, do not try to pull a bin directly out. Push down on its top edge first to release it, then pull it to open it.

2. Remove the Yellow STC (Soft Toner Cartridge) from its box.
3. Shake the STC [A] up and down about 10 times. Do not squeeze or knead the toner cartridge (this will make clumps in the toner).
   NOTE: The bottom of the cartridge [C] must face down.
4. Set the Yellow STC in the bin [B].
   NOTE: Make sure that the color ID label [C] and ID chip terminals [D] are facing toward you.
5. Push the Yellow STC bin to close and lock it.
6. Do Steps 1 to 6 for the other three STCs (Cyan, Magenta, Black)

   Important: Make sure that the color of each STC agrees with the label on the bin door before you install it.

Downloaded from www.Manualslib.com manuals search engine

Make the Machine Level

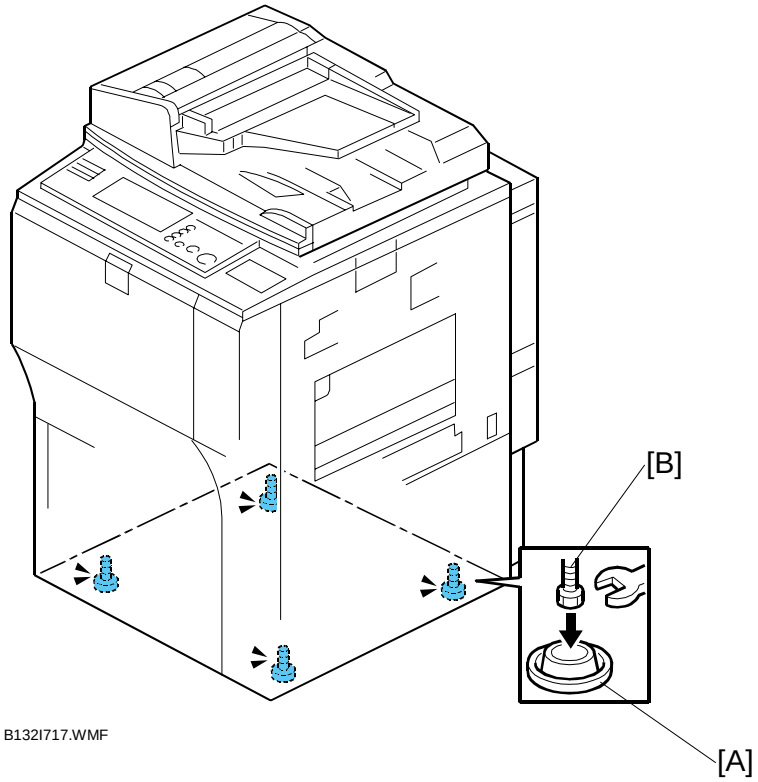

1. Attach the leveling shoes [A] to the machine.
2. Place a level on the exposure glass.
3. Use a wrench to lift or lower the nuts [B] on the leveling shoes until the machine is less than 5 mm from level (measure it from front to rear and from left to right).

Downloaded from www.Manualslib.com manuals search engine

Attach the PCU Stand Rack

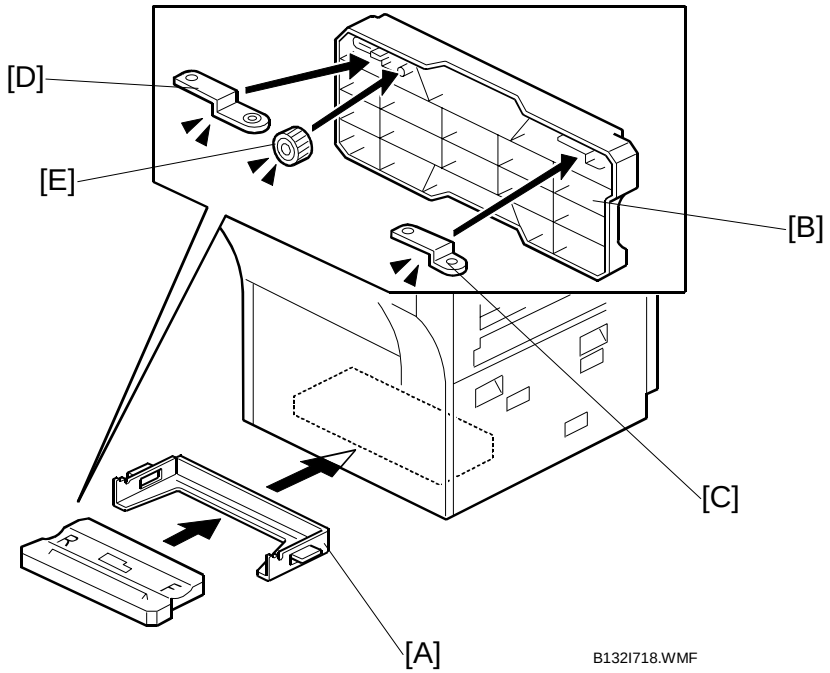

1. Hold the PCU stand rack [A] with its open end pointed as shown, and put it below the machine.
2. Attach the rack to the bottom of the machine with the magnets on the rack.
3. Make sure that the following accessories are attached to the bottom of the PCU stand [B]. Then they will be available for the next servicing:
   [C] Lock plate (short): Necessary for drum motor replacement
   [D] Lock plate (long): Necessary for developer replacement to lock the front side of the development roller.
   [E] Development roller gear: Necessary for developer replacement to turn the development gears.
4. Put the PCU stand in the rack below the copier.

Downloaded from www.Manualslib.com manuals search engine

Attach Decals

1. Attach the paper-installation decals to the trays. These tell you how to add new paper.
   - Front set decal: Attach this decal to the LCT if it is installed. 'Front set' means that the paper should be face up in the tray.
   - Back set decal: Attach these decals to the trays of the copier. 'Back set' means that the paper should be face down in the tray.

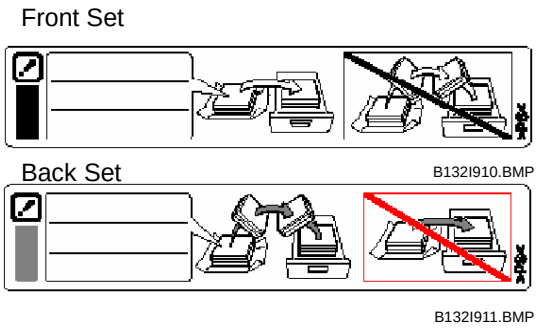

B132I910.BMP

B132I911.BMP

2. Attach exposure-glass-cleaning decal [A] at the front edge of the ARDF exposure glass.

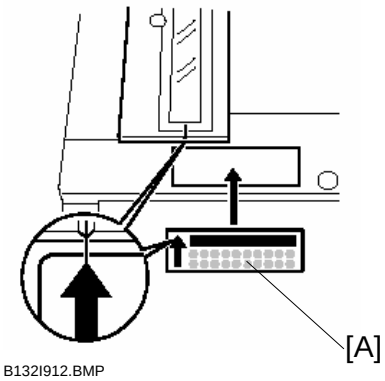

B132I912.BMP

3. Attach the original-caution decal [B], and the silicone cloth holder [C].
4. Put the silicone cloth [D] in the holder.

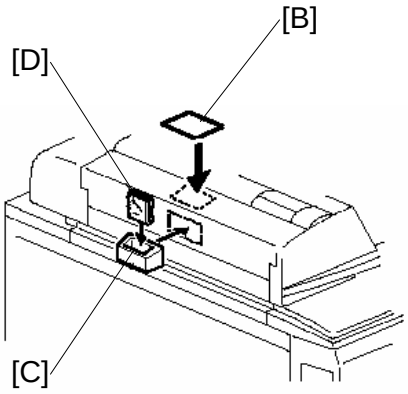

B132I913.BMP

Downloaded from www.Manualslib.com manuals search engine

Initializing Developer and Toner

1. At the left rear corner of the machine, make sure that the manual breaker switch [A] is UP.

   Important: When the breaker switch is UP, the copier is ready to be turned on. The "**|**" mark can be seen.

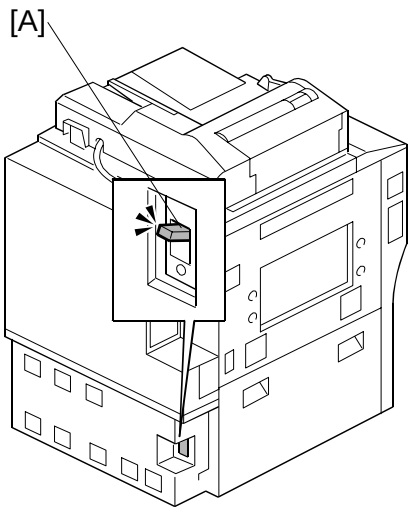

B132I719.WMF

   Important: Before you turn the copier on, make sure that the ARDF [B] is connected to the copier at the left rear corner.

2. Connect the power cord of the copier to a power outlet.

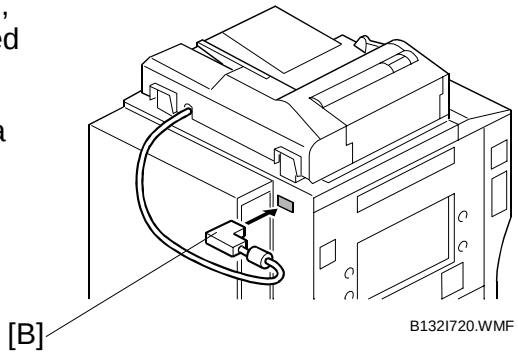

B132I720.WMF

3. Open the front door [C].

   Very Important!:

   - **TURN ON THE MACHINE WITH THE FRONT DOOR OPEN TO PREVENT THE MACHINE FROM PERFORMING THE INITIAL PROCESS CONTROL SELF-CHECK.**
   - **IF THE FRONT DOOR IS NOT OPEN, THE DRUMS WILL TURN WITH NO TONER IN THE PCUS.**
   - **IF THE POWER IS TURNED ON WITH THE FRONT COVER CLOSED, DEVELOPER REPLACEMENT WILL BE REQUIRED.**
   - **IF THE DRUMS TURN WITH NO TONER IN THE PCUS, THIS CAN CAUSE THE CLEANING BLADES TO CATCH ON A DRY DRUM AND DAMAGE THE DRUM SURFACES.**

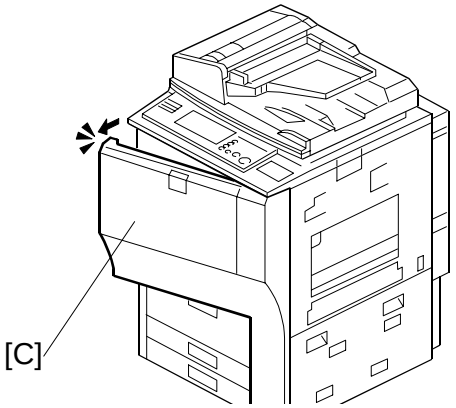

Open the Door Before Power ON!

B132I721.WMF

4. With the front door open, turn on the main power switch.

Downloaded from www.Manualslib.com manuals search engine

5. Close the front door after "Open Cover" appears on the display.
6. Enter the SP mode and do **SP3811 001**.
7. Press [Execute]. Approximately 4 minutes is necessary for this operation.

   SP3811 001 does these tasks:
   - Makes sure that all the seals are removed from each developer cartridge and that there is developer in each PCU.
   - Turns toner supply on, and sends toner to the sub hopper of each PCU.
   - Sends toner to the PCU to give the drum a layer of toner. If this is not done, the cleaning blades will bend and scratch the drums.
   - Initializes the TD sensor.
   - Starts the process control self-check to set the target for development gamma, and adjusts toner density.

Very Important!:

ONLY INITIALIZE THE TD SENSOR ONE TIME. DO NOT DO IT MORE THAN ONE TIME.

Only initialize the TD sensor at the following times:

- At installation, exactly as explained in the installation procedure.
  - **NEVER DO TD SENSOR INITIALIZATION SP3801 001~006 AFTER SP3811-001.**
  - **SP3811-001 DOES NOT ONLY INITIALIZE THE DEVELOPER. IT ALSO INITIALIZES THE TD SENSOR. IF YOU DO SP3801 AFTER SP3811, TD SENSOR INITIALIZATION WILL BE DONE TWICE. THIS CAN CAUSE A FATAL ERROR IN TONER SUPPLY CONTROL.**
- After you replace developer (only initialize the TD sensor for the color that you replaced)
- As instructed in specific troubleshooting procedures.

If you do not obey the above instructions, you will get toner scattering inside the machine.

8. When the message tells you that the initialization is completed, press [Close].
9. Do **SP3812 001** to make sure that **SP3811 001** was done correctly.

   This operation panel shows "**1111**". A "**1**" shows that each PCU was initialized correctly.

   NOTE: If "1111" is not shown, see section 4.2.3 in, "4. Troubleshooting".

   Important: From left to right, the 1s show the status of the PCUs in this sequence: KMCY.
10. Do **SP2111 001** to force correct color toner position alignment (MUSIC). This operation requires about 65 seconds to finish.
11. Do **SP2181 030** to make sure that **SP2111 001** was done correctly.

    The operation panel shows "**1**". This shows that the position of each color toner is aligned correctly.

    NOTE: If "1" is not shown, see "4.4.2 Color Registration Error Adjustment".

Downloaded from www.Manualslib.com manuals search engine

Load the Paper Trays

For each paper cassette tray:

1. Move the side fence and bottom fence to the correct positions for the paper.
2. Add paper to the trays.
3. Attach the paper size decals to the front of the paper cassette trays and the tandem tray.
   NOTE: It is not necessary to input the paper size setting for trays 2 and 3. This is detected automatically.

Make a Test Color Print

1. Make sure that A3 or DLT paper is put in one of the trays.
   NOTE: Use the same type of paper that the customer normally uses for color outputs.
2. Put a "Color test chart C-4" on the exposure glass.
3. Select full color mode and print one copy of the chart. You will use this in the ACC procedure, if ACC is necessary.
4. Check the results of the copy with the customer.
   - If the quality of the color is satisfactory, ACC adjustment is not necessary.
   - If the quality of the color is not satisfactory, do the ACC adjustment described below.

ACC (Automatic Color Calibration) Adjustment

Automatic color calibration is done at the factory with the procedure given below. Do this procedure only if the color quality is not satisfactory for the customer.

1. Press [User Tools] (◈/123).
2. To print a color pattern, select Maintenance> Auto Color Calibration
3. Press "Start".

```
Machine will start self-check before
printing test pattern
Press [Start Printing].
```

4. Press "Start Printing".

```
Now self-checking.
Test pattern will be printed.
Please wait.
```

   The machine does process control, then it prints a test pattern.

```
Place Test Pattern on the exposure glass correctly.
Then press [Start Scanning]
```


Downloaded from www.Manualslib.com manuals search engine

5. Remove the Color test chart C-4 from the exposure glass (this was put on the exposure glass during the previous procedure 'Make a Test Color Print').
6. Place the color test pattern face-down (this is the test pattern that you made in step 4). The arrow and notation ("Face down and align the arrow with the rear left corner of the exposure glass.") must be at the rear left corner.
7. Press [Start Scanning] on the display. The machine scans the pattern one time.

   Scanning…
   Please wait.

   If you see this error:

   Scanning failed.
   Place test pattern on the exposure glass correctly.
   Then press [Start Scanning].

   Make sure that the arrow on the test pattern is in the upper left corner of the exposure glass.
8. Remove the pattern from the exposure glass and replace it with the Color test chart C-4.
9. Press "Exit" three times to return to the Copy mode screen.
10. Make a full-color copy of the test chart.
11. Compare the results of the 1st copy (made in step 3 of "Make a Test Color Print") and the 2nd copy (made in step 10 above):

    If the results of the 2nd copy are better than the results of the 1st copy, you are finished.

    -or-

    If the results of the 2nd copy are worse than the results of the 1st copy:

    - Press the [User Tools] key
    - Press Maintenance> Auto Color Calibration> Previous Setting.
12. Remove the color chart from the exposure glass.
13. If the customer is not satisfied with the 1st copy or the 2nd copy, you must do the printer gamma adjustment (see section 3.19.6).

Downloaded from www.Manualslib.com manuals search engine

Counter Display Setting

The default setting for the counter is "0" (development). Do the SP setting below to set the counter for copy/print (paper count).

1. Enter the SP mode.
2. Do **SP5045 001** (Counter Display Setting).
3. Select the counter to use:

   0 Development counter (Default)

   1 Page counter

Important!

- **THIS SETTING CAN BE DONE ONLY ONCE. AFTER IT IS SET TO "1", THE COUNTER SETTING CANNOT BE CHANGED. IF THE WRONG SETTING IS SELECTED BY MISTAKE, CONTACT YOUR TECHNICAL SUPERVISOR.**

Print an SMC Report

1. Enter the SP mode.
2. Do **SP5990 001** to print a full SMC report. Keep it in a safe location, with the factory setting sheet.

Downloaded from www.Manualslib.com manuals search engine

Connect the Upper and Lower Tray Heaters

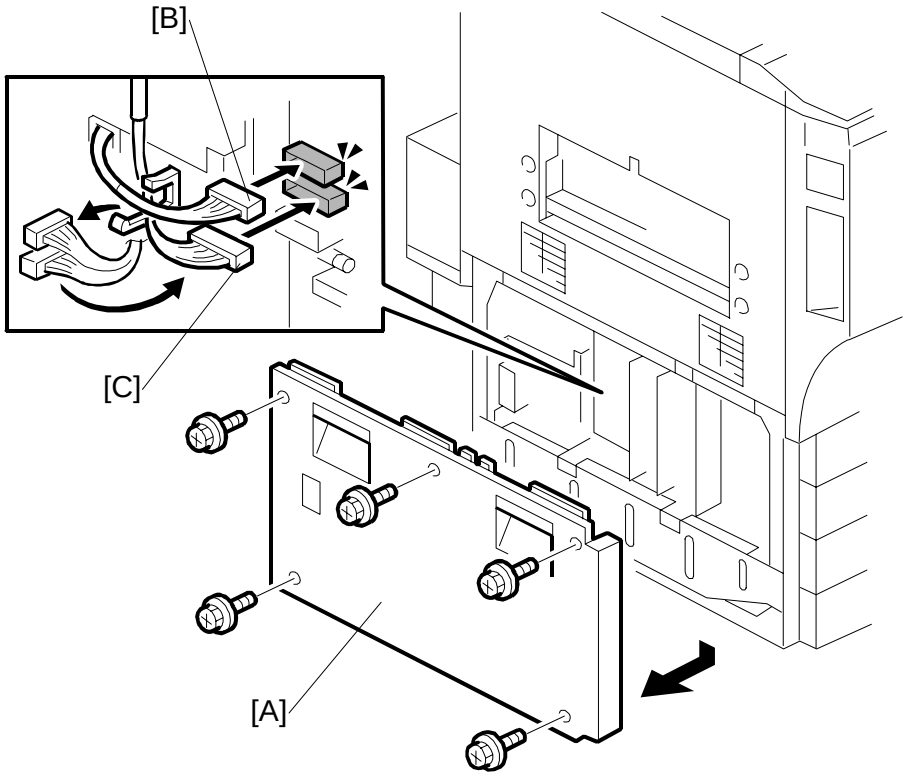

B132I009.WMF

The machine comes from the factory with the tray heaters disconnected.

NOTE: Heater connection is optional, but the heaters must be connected if the location has high humidity. Speak with the customer before you connect the tray heaters.

1. Remove the left lower cover [A] (x 5).
2. Attach the connectors HT5 [B] and HT6 [C] (x 1, x 2)

Downloaded from www.Manualslib.com manuals search engine

1.3.3 BREAKER SWITCH TEST PROCEDURE

How to Test the Electrical Breaker Switch

The following is the procedure for testing the electrical breaker switch.

NOTE:

- The breaker switch is located at the left rear corner of the machine.
- When the switch is in the ON position, you can see the "|" mark on the lower part of the switch.

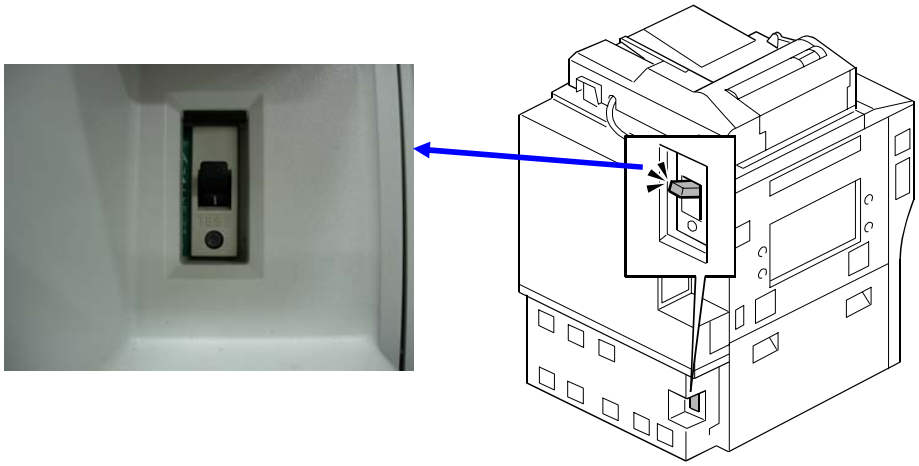

1. Connect the power plug. Then, push the test button [A] with the tip of a pen. If the switch [B] is functioning normally, it will automatically move to the **middle** position. You will see the "|" mark and the “o” mark.

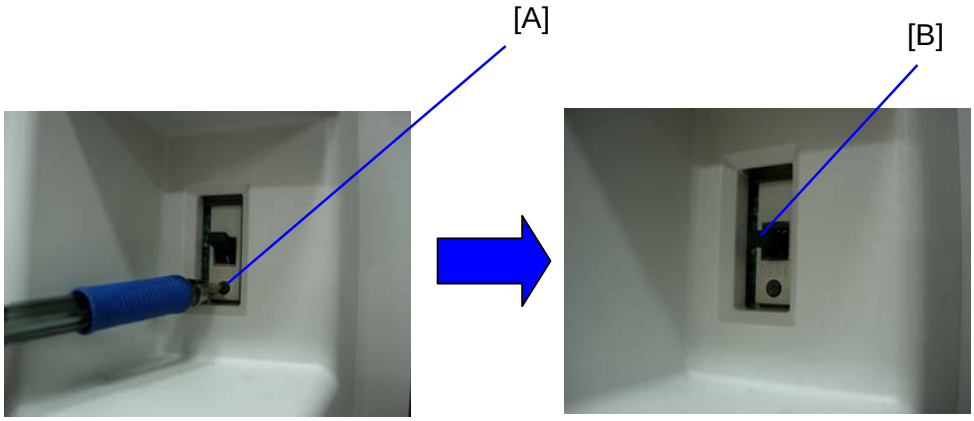

Downloaded from www.Manualslib.com manuals search engine

To return the switch to the ON position:

(Perform following 2 steps continuously)

1. Push down the switch to the lower (OFF) position [C]. (You will see the “o” mark.)

2. Push up the switch to the upper (ON) position [D]. (You will see the "|" mark.)

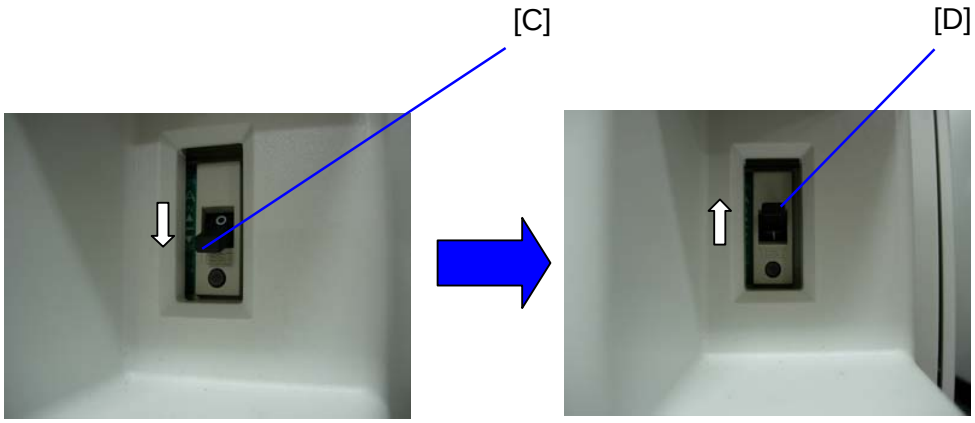

Downloaded from www.Manualslib.com manuals search engine

1.4 COPY TRAY (B756)

1.4.1 ACCESSORIES

Check the accessories and their quantities against this list.

Description	Q'ty
1. Copy Tray	1
2. Actuator Arm and Bracket (not used)	1
3. Tapping Screw (not used)	2
4. Large Cap	1
5. Small Cap	4
6. Tapping Screw (M4 x 8)	1
7. Harness Clamp	1
8. Paper Height Sensor	1
9. Actuator Arm Bracket	1
10. Sensor Bracket	1
11. Actuator Arm	1

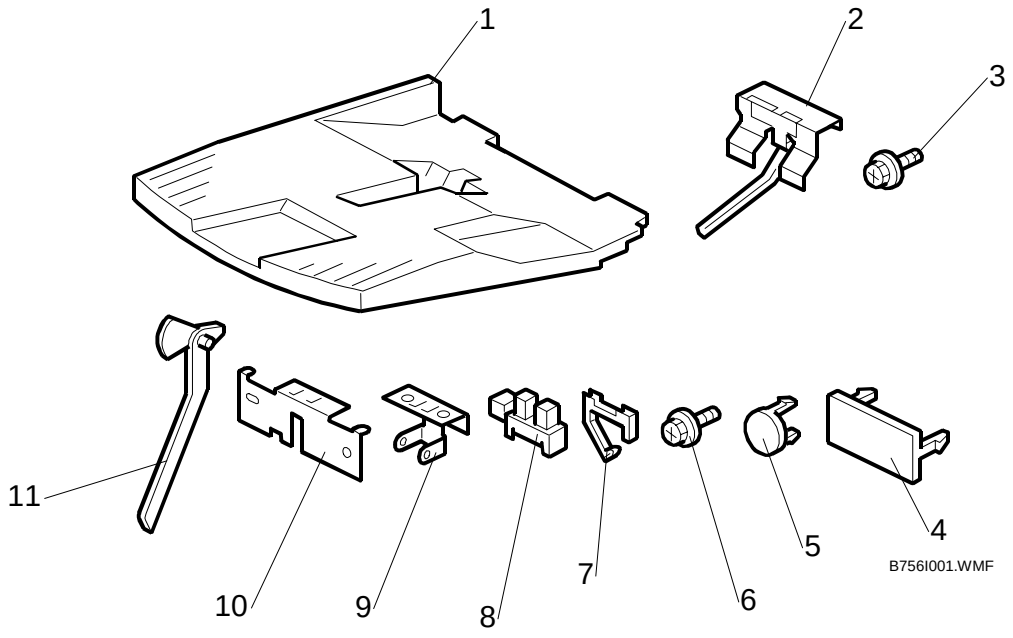

Downloaded from www.Manualslib.com manuals search engine

1.4.2 INSTALLATION

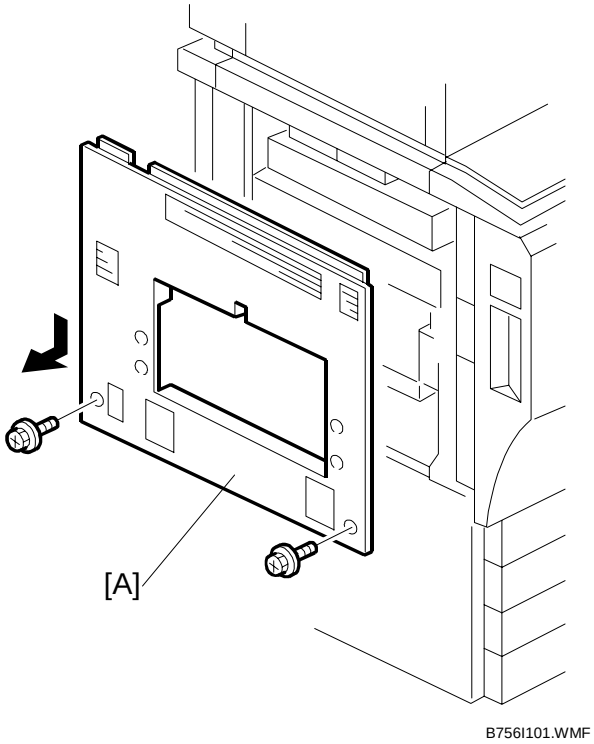

1. Remove the left upper cover [A] (☞ x 2).

Downloaded from www.Manualslib.com manuals search engine

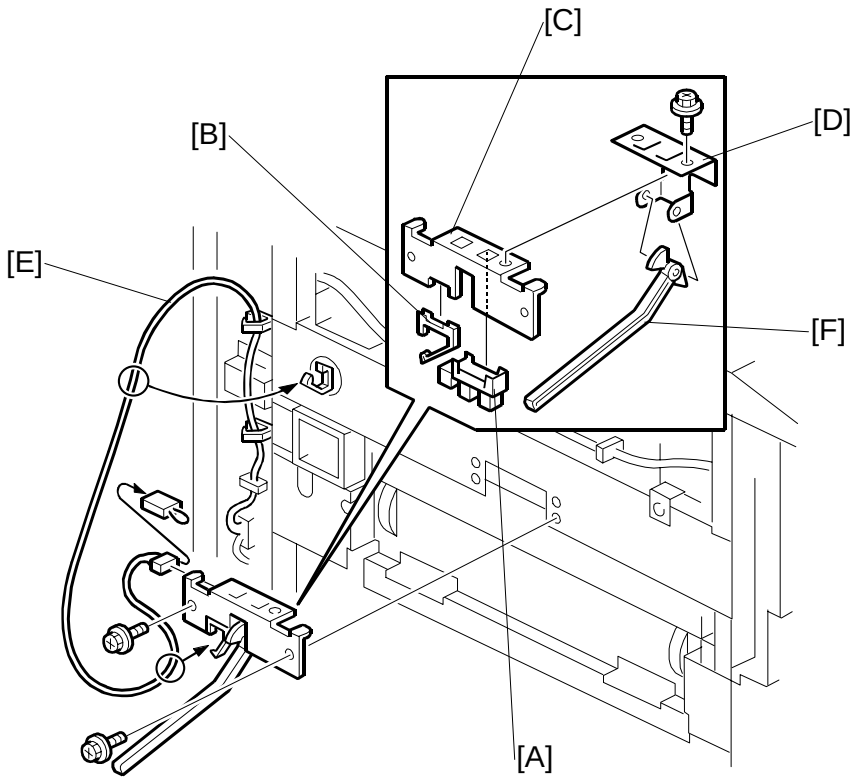

2. Attach the paper height sensor [A] and harness clamp [B] to the sensor bracket [C].
3. Attach the sensor bracket and actuator arm bracket [D] to the copier (x3).
4. Attach the sensor harness [E] (x1, x4).
5. Attach the actuator arm [F] to the arms of the actuator arm bracket.

Downloaded from www.Manualslib.com manuals search engine

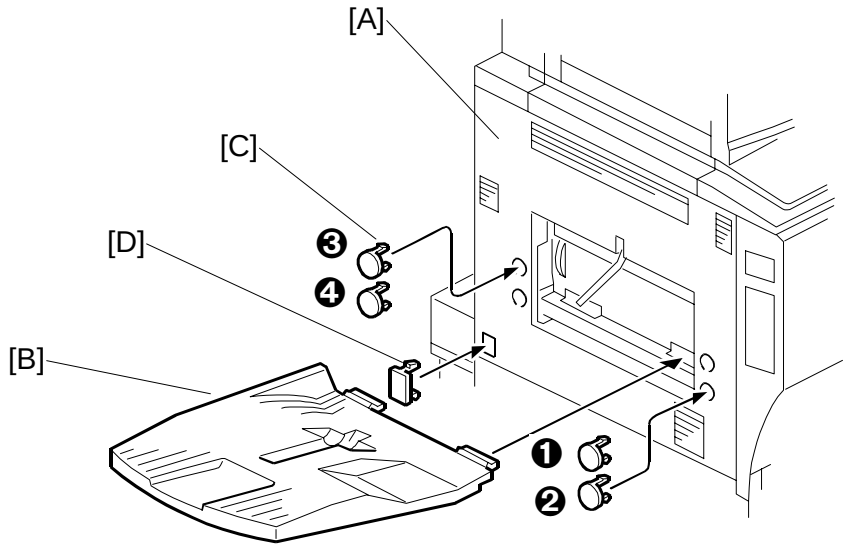

B756I002.WMF

6. Reattach the left upper cover [A] (x2).
7. Attach the copy tray [B].
8. Attach the small caps [C] to the holes ❶, ❷, ❸, ❹.
9. Install the large cap [D] in the finisher power connection point.

Downloaded from www.Manualslib.com manuals search engine

1.5 A3/11" X 17" PAPER SIZE TRAY (B331)

The A3/11" x 17" Paper Size Tray is installed in tray 1 of the copier e-STUDIO4500c/5500c.

1.5.1 ACCESSORIES

Check the accessories and their quantities against this list.

Description	Qty
1. A3/DLT Tray	1
2. Short Connector	1
3. Paper Size Decal	1

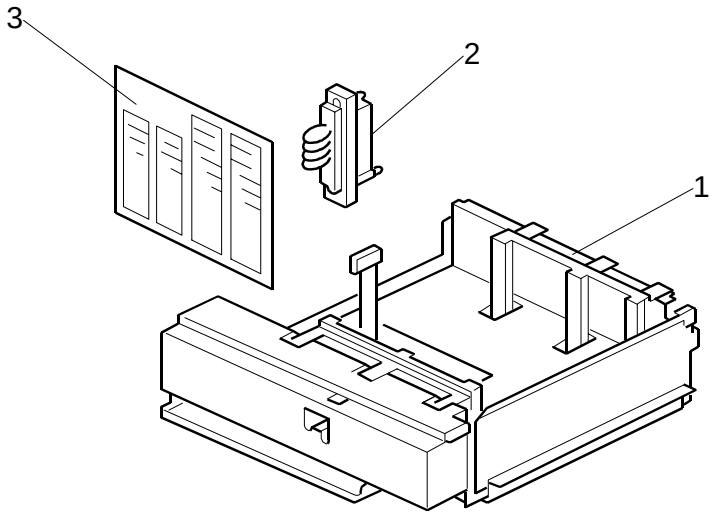

B331I001.WMF

Downloaded from www.Manualslib.com manuals search engine

1.5.2 INSTALLATION

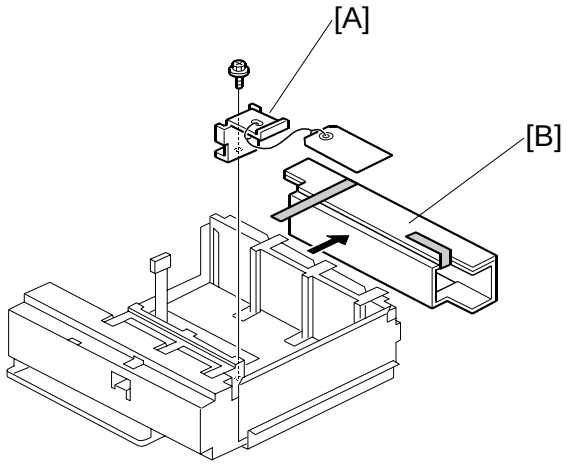

B331I011.WMF

⚠WARNING!

Always turn the machine off and disconnect the machine power cord before you do the following procedure.

1. Remove the metal retainer [A] and packing material [B] (☞ x 1).
2. Check the position of the front and rear fences, and make sure that they are set for DLT or A3.

Downloaded from www.Manualslib.com manuals search engine

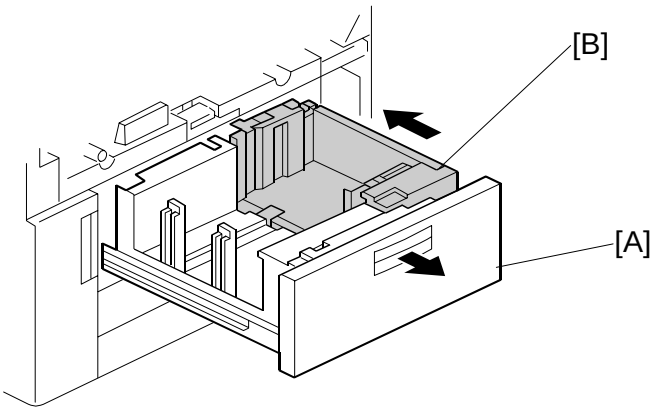

B331I707.WMF

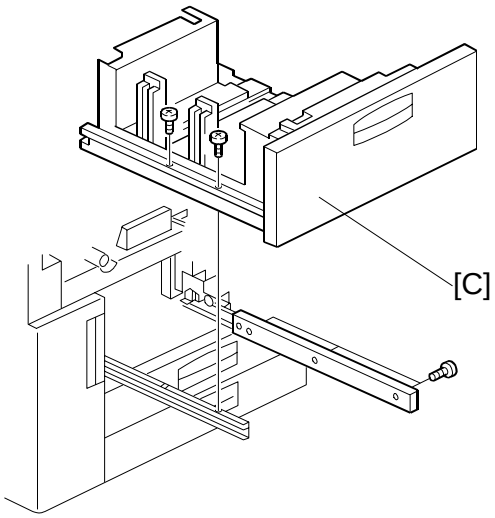

B331I708.WMF

3. Open the front doors.
4. Pull out the tandem feed tray [A] fully.
5. Push the right tandem tray [B] into the machine.
6. Remove the left tandem tray [C] (x 2 left, x 3 right).

Downloaded from www.Manualslib.com manuals search engine

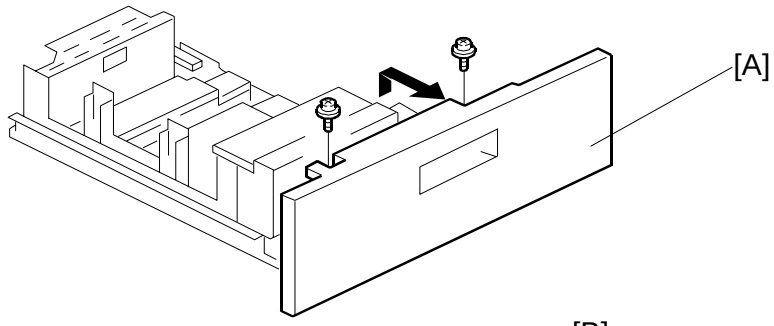

B331I102.WMF

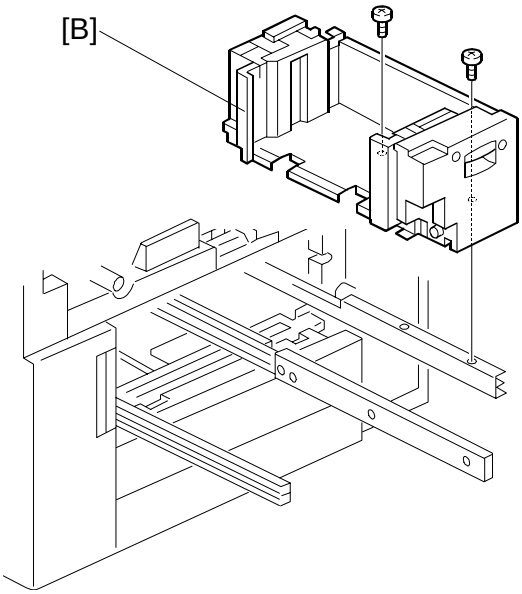

B331I709.WMF

7. From the left tandem tray, remove the front cover [A] (☞ x 2).
8. Pull out the right tandem tray [B], then remove it. (☞ x 2).

Downloaded from www.Manualslib.com manuals search engine

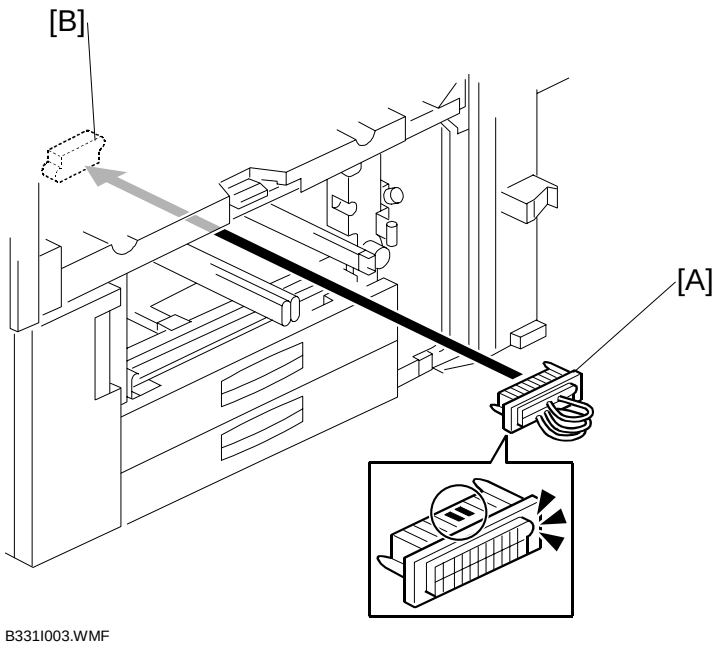

B331I003.WMF

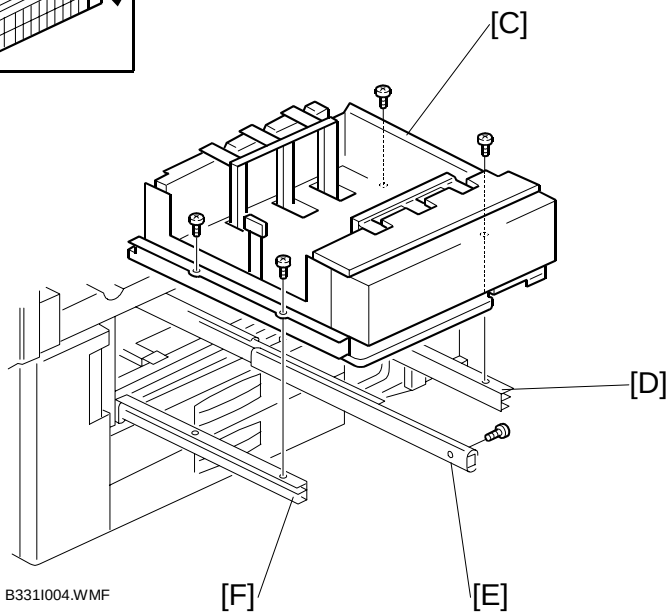

B331I004.WMF

9. Put the short connector [A] into the socket in the machine [B].
   NOTE: Hold the connector as shown in the illustration.
10. Install the A3 / 11”x17” paper size tray [C] on the right rail [D], center rail [E], and left rail [F]. Use the screws that you removed in Steps 6 and 8.
    NOTE: You must use the short, silver screws on the left and right rails. If you use one of the longer screws, it will stop the movement of the tray on the rails.

Downloaded from www.Manualslib.com manuals search engine

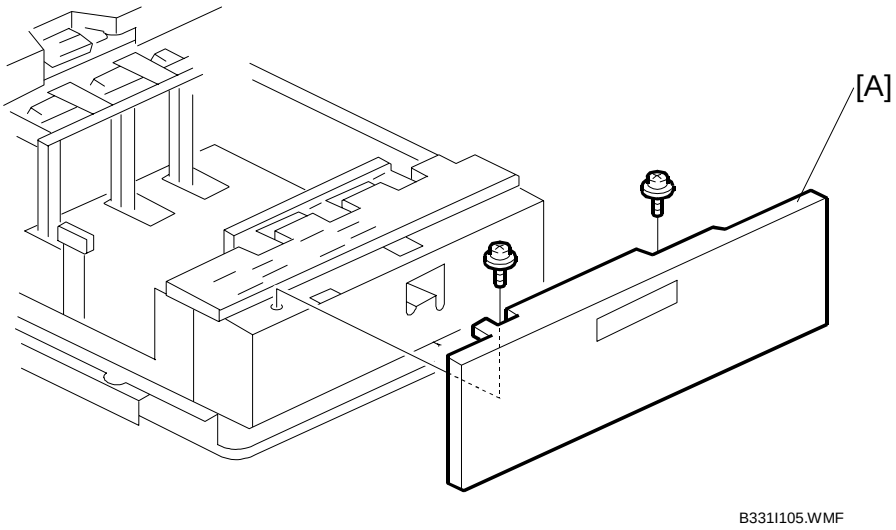

11. Install the front cover [A] (x 2) that was removed from the left tandem tray.
12. Use **SP5959 001** to select the paper size for Tray 1 (A3 or 11” x 17”).
13. After you select the paper size, turn the machine off and on to change the indicator on the operation panel.

Downloaded from www.Manualslib.com manuals search engine

1.6 LCT (B473), LCT ADAPTER (B699)

1.6.1 ACCESSORIES

Check the accessories and their quantities against this list.

LCT (B473)

Description	Qty
1. Upper docking pins (grooved)	2
2. Lower docking pin (not grooved, not for e-STUDIO4500c/5500c)	1
3. Flat-head shoulder screw - M4x6	1
4. Paper Set Decal	1

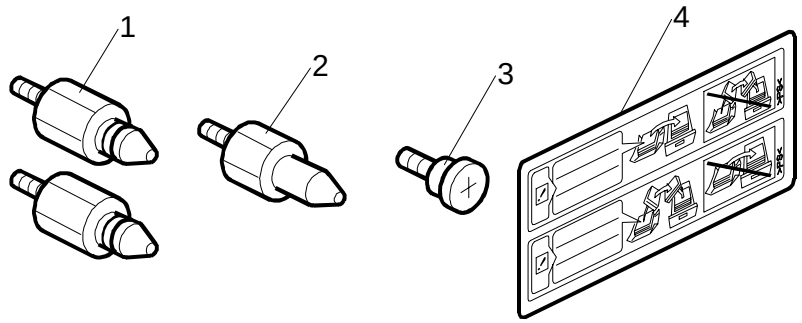

B473I101.WMF

Downloaded from www.Manualslib.com manuals search engine

LCT Adapter (B699)

Description	Qty
1. Brackets	2
2. Supports	3
3. Machine Screws (M3x8)	3
4. Machine Screws (M4x8)	6

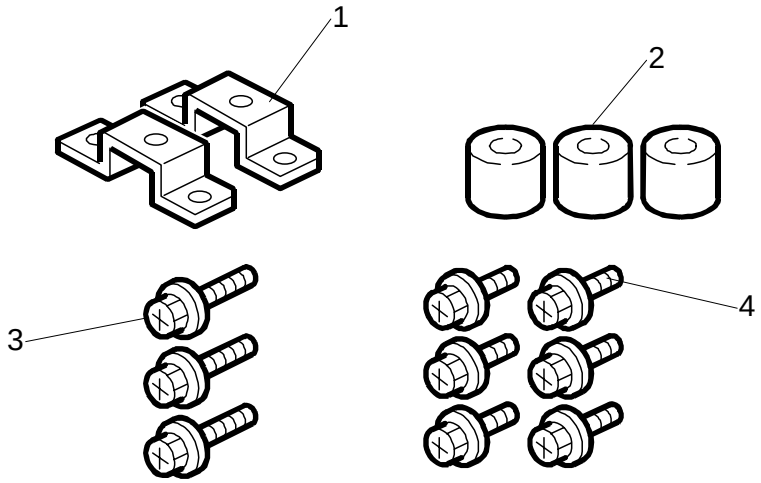

B699I101.WMF

Downloaded from www.Manualslib.com manuals search engine

1.6.2 INSTALLATION

Removing Tape and Accessories

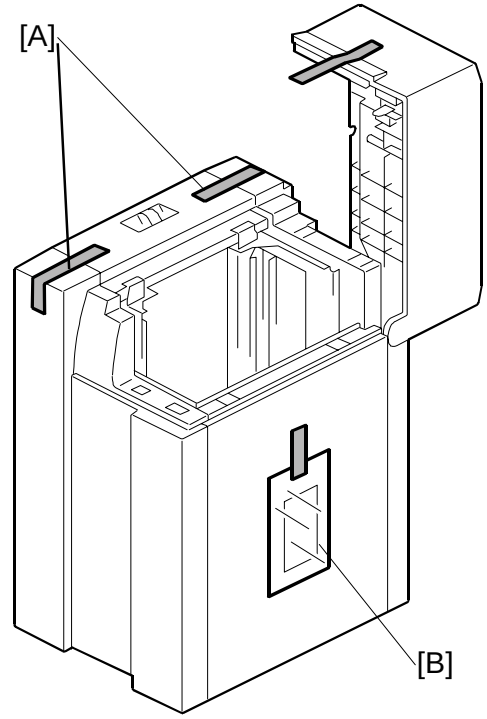

B473I001.WMF

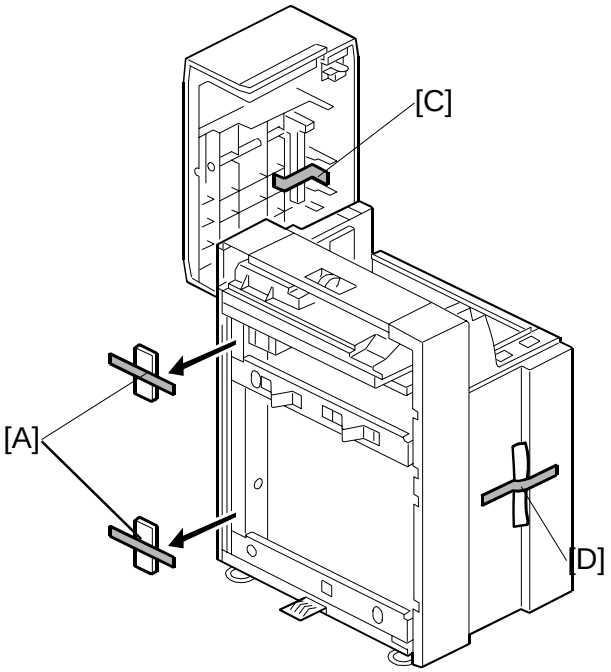

B473I002.WMF

⚠WARNING!
Always turn the machine off and disconnect the machine power cord before you do this procedure.

1. Remove the filament tape [A].
2. Remove the decals [B].
3. Remove the tape under the lid [C].
4. Remove the docking pins [D] (attached to the rear with tape).
5. Remove the docking pins [E].

Downloaded from www.Manualslib.com manuals search engine

LCT Adapter (B699) Installation

The LCT Adapter Kit B699 must be installed before you install the LCT.

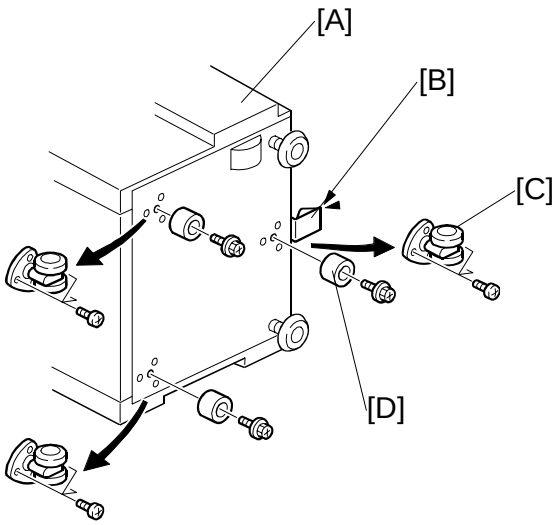

B699I102.WMF

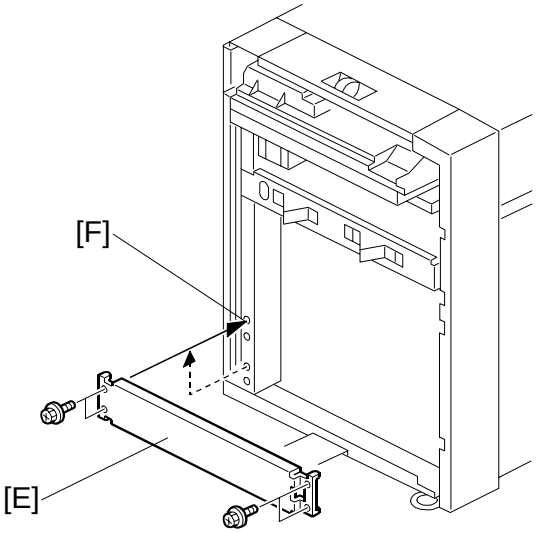

B699I103.WMF

1. Put the LCT [A] on its *front* side.
   Important! : Do not put the LCT on its right side (the open side), or you will bend the ground plate [B].
2. Remove the 3 casters [C] (x 3 each).
3. Attach the 3 supports [D] (x 1 each – M3x8 thin screws).
4. Set the LCT in a vertical position.
5. Remove the stay [E] (x 4).
6. Attach the stay [E] at position [F] (x 4).

Downloaded from www.Manualslib.com manuals search engine

LCT Installation

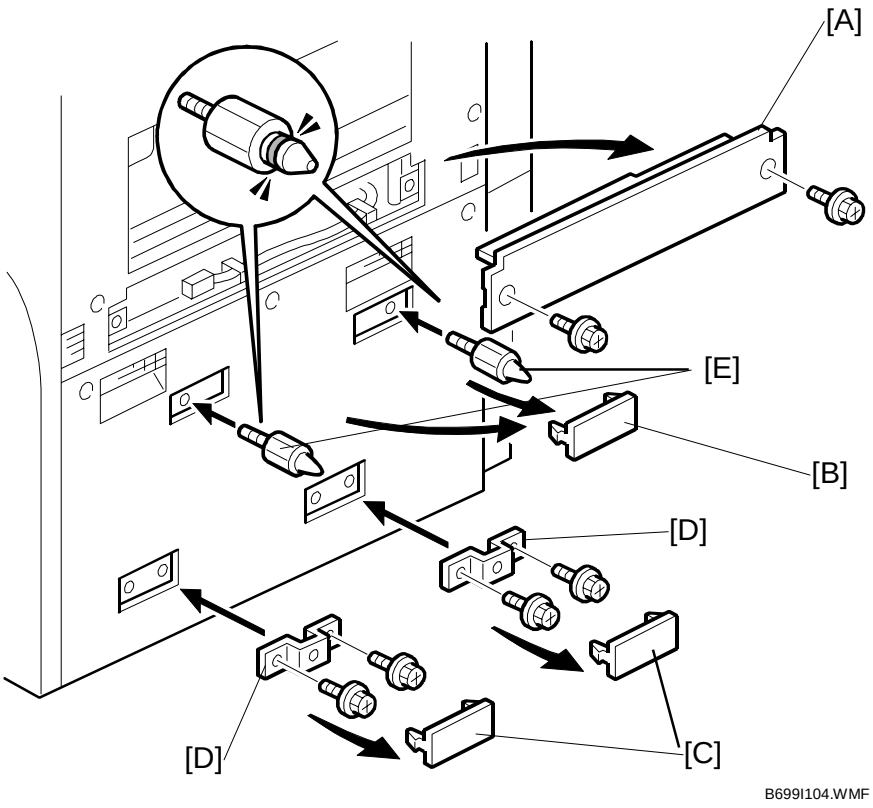

1. Remove the LCT installation cover [A] from the right side of the machine. (🔩 x 2).
2. Remove the upper covers [B].
3. Remove the lower covers [C].
4. Attach the brackets [D] that are supplied with the LCT Adapter (B699) (🔩 x 2 each – M4 x 8).
5. Attach the two grooved docking pins [E].
   NOTE: The docking pin without a groove is not necessary for this installation.

Downloaded from www.Manualslib.com manuals search engine

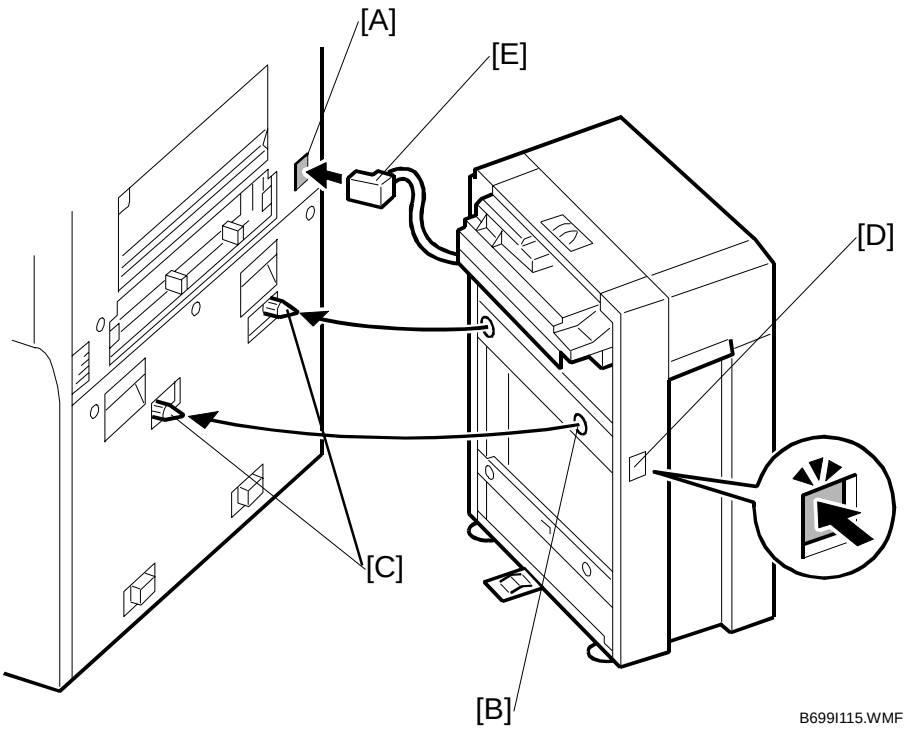

6. Remove the connector cover [A].
7. Align the holes on the side of the LCT [B] with the docking pins [C] on the side of the machine.
8. Slowly push the LCT onto the pins.
   NOTE: The release button [D] is used to unlock the LCT.
9. Connect the plug [E] of the LCT power connector to the side of the machine.

Downloaded from www.Manualslib.com manuals search engine

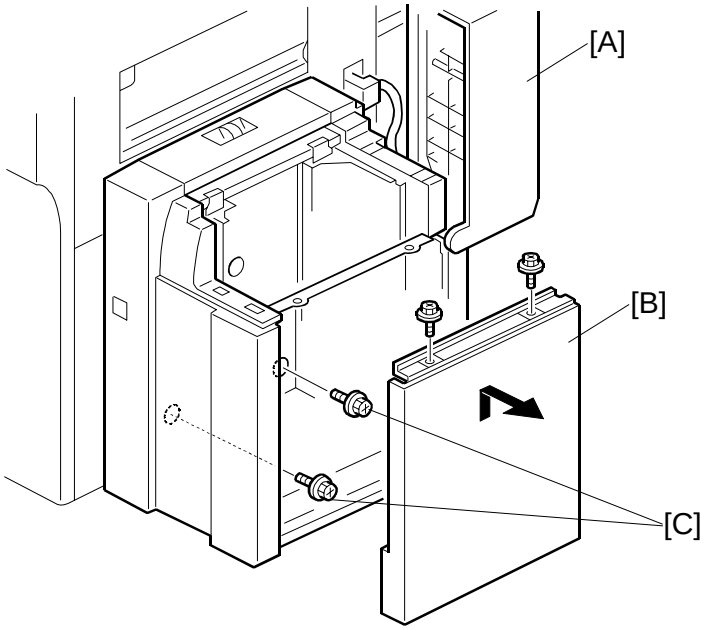

B699I107.WMF

10. Open the upper cover [A].
11. Remove the cover [B] (x 2).
12. Attach screws [C] to the brackets on the side of the machine.
13. Attach the cover [B] with the screw that you removed in Step 11.
14. Turn the machine on.
15. Enter the SP mode.
16. Do **SP5959 005**.
    NOTE: The side fences of the NA model are set for 8 1/2" x 11" paper. You must select the paper size with this SP.
17. Input "0" for A4 LEF or "4" for 8 1/2" x 11" LEF.
18. Turn the machine off and on to enable the setting.

Downloaded from www.Manualslib.com manuals search engine

LCT (B473): Paper size change from A4 to 8 1/2" x 11" (LT)

Important: Start the following procedure after the copier installation and LCT installation are both completed. This is because to do the following procedure, the copier main power must be turned ON.

1. Turn ON the copier main power.
2. Open the LCT top cover [A].

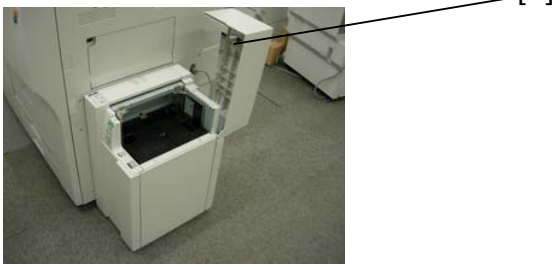

3. Hold down the LCT bottom plate function button [B] while covering the photo sensor [C]. Do this until the bottom plate [D] reaches the bottom of the LCT.

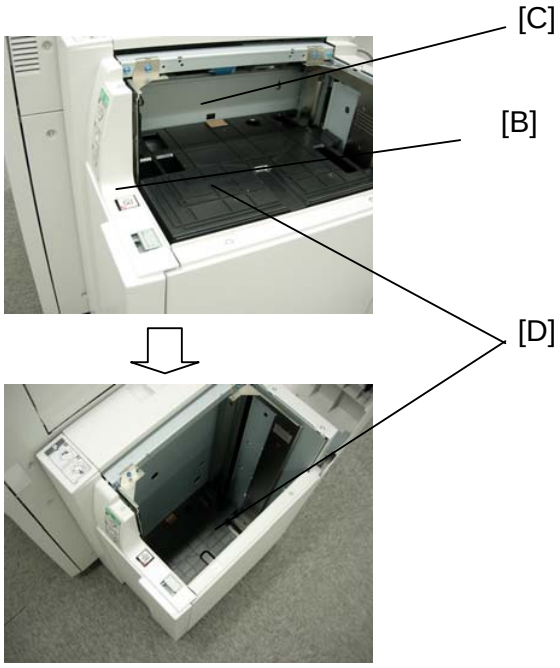



Downloaded from www.Manualslib.com manuals search engine

4. Move the side fence brackets [E] from the A4 position to the 8 1/2" x 11" (LT) position (1 screw for each bracket).
   NOTE: The various side fence positions are written on the bracket [F].

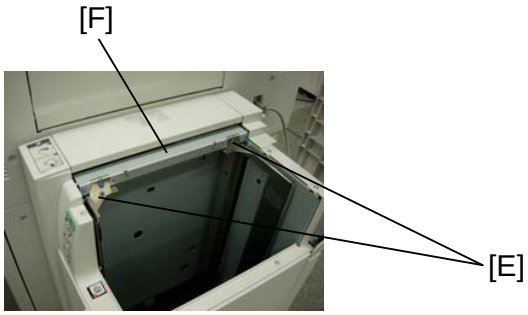



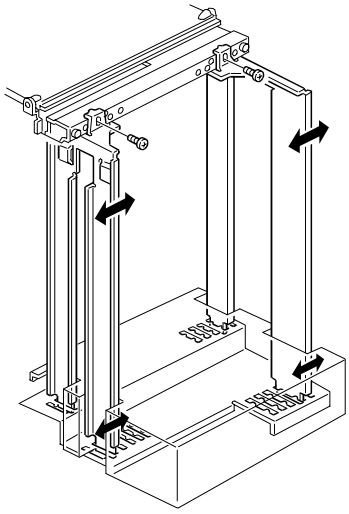

5. Remove the shaft [H] from the backside of the LCT top cover (1 snap ring [G]).

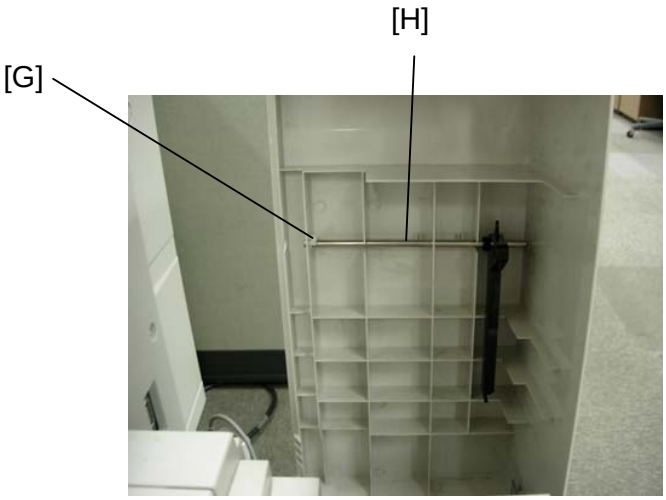

Downloaded from www.Manualslib.com manuals search engine

6. Move the LCT end fence [I] from the A4 position to the 8 1/2" x 11" (LT) position.

7. Insert the shaft [H] (1 snap ring).
   NOTE: NOTE: The various end fence positions are written on the LCT top cover [J].

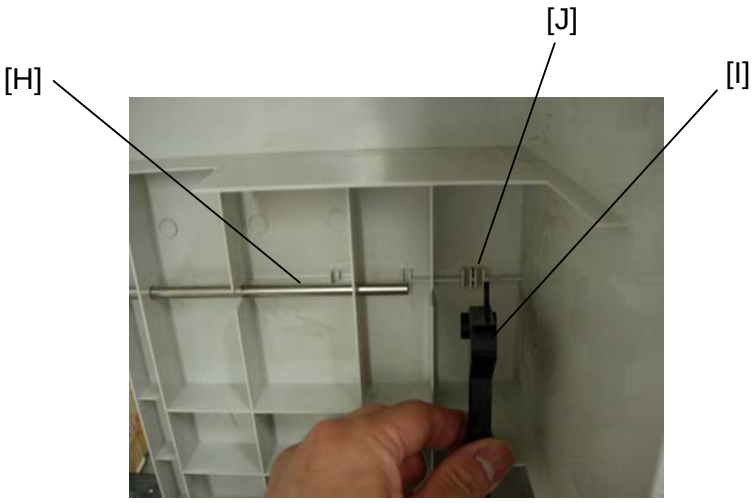

8. Close the LCT top cover [K].

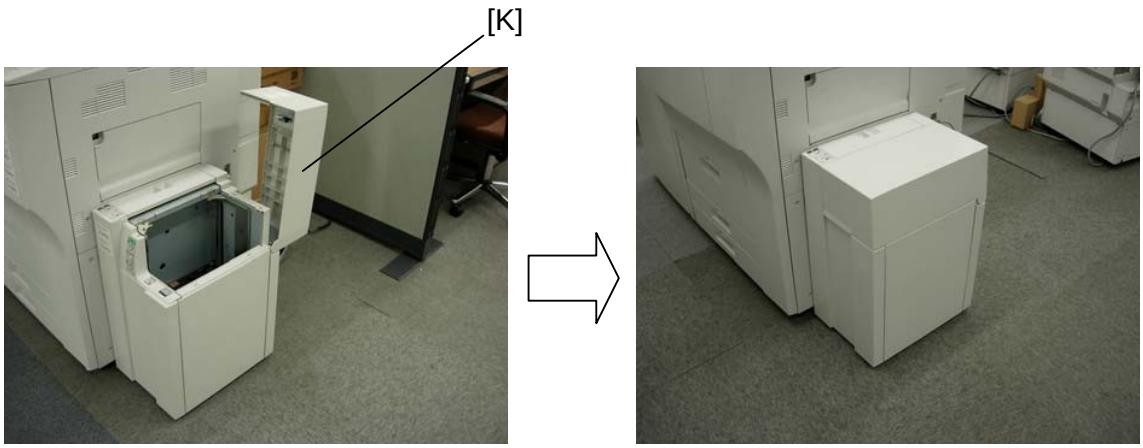

9. Set Sp5959-005 to a value of **1** (for 8 1/2" x 11" (LT)).

Downloaded from www.Manualslib.com manuals search engine

1.7 81/2" X 14"/B4 PAPER SIZE TRAY (B474)

The 81/2" x 14"/B4 (B474) is installed in the LCT (B473).

1.7.1 ACCESSORIES

Check the accessories and their quantities against this list.

Description	Q'ty
1. Tapping screws - M4x8	4
2. Tapping hex screws - M4x8	6
3. Harness clamp	1
4. B4/LG frame	1
5. Front bracket	1
6. Rear bracket	1
7. Bottom plate extension	1
8. Cover	1

Downloaded from www.Manualslib.com manuals search engine

1.7.2 INSTALLATION

LCT Connected to the Machine

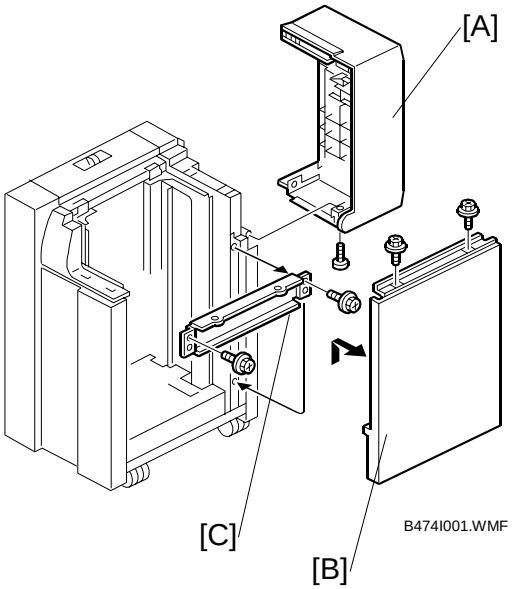

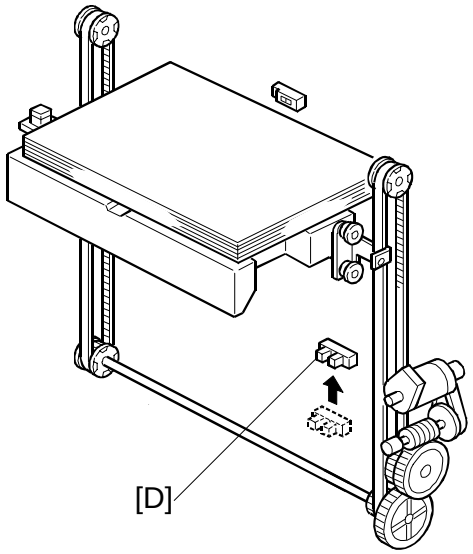

⚠WARNING!

Turn the machine off and disconnect the machine power cord before you start this procedure.

1. If the LCT is connected to the copier:
   - Open the cover and remove the paper.
   - Close the cover.
   - Turn the main power switch off.
   - Disconnect the LCT from the copier.
2. Remove the LCT cover [A] (☞ x 1).
3. Remove the right cover [B] (☞ x 2).
4. Remove the right stay [C] and attach it below (☞ x 2).
5. Change the position of the lower limit sensor [D] (☞ x 1).
6. Attach the harness clamp (not shown) to the rear of the plate. Use this clamp to hold the sensor connector wire.

Downloaded from www.Manualslib.com manuals search engine

7. Attach the front bracket [A] with the beveled corner down (☞ x 2).

   NOTE: If the brackets are not easy to install, lift the bottom plate with your hand.

8. Attach the rear bracket [B] with the beveled corner down (☞ x 2).
9. Attach the bottom plate extension [C] with the hex screws (☞ x 4).

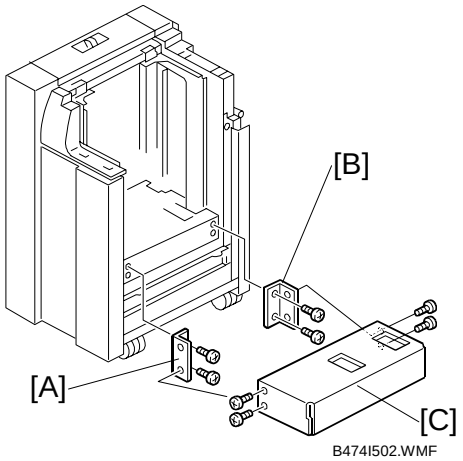

B474I502.WMF

10. Remove the casters from the bottom of the B4/LG frame [D]
11. Align the positioning pin [E].
12. Attach the B4/LG frame [F] with the hex screws (☞ x 2).

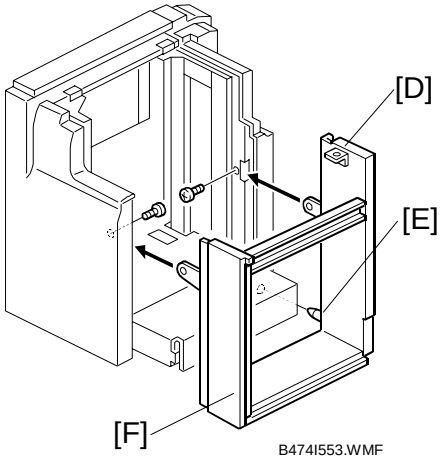

B474I553.WMF

13. Move the front side fence [G] and rear side fence [H] to the B4 or 81/2" position and attach it (☞ x 1).

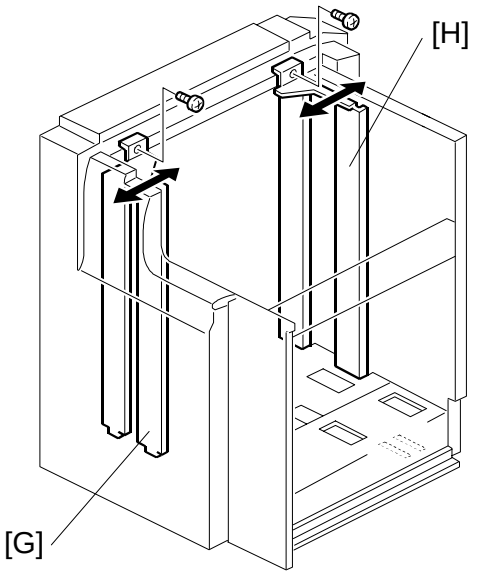

B474I555.WMF

Downloaded from www.Manualslib.com manuals search engine

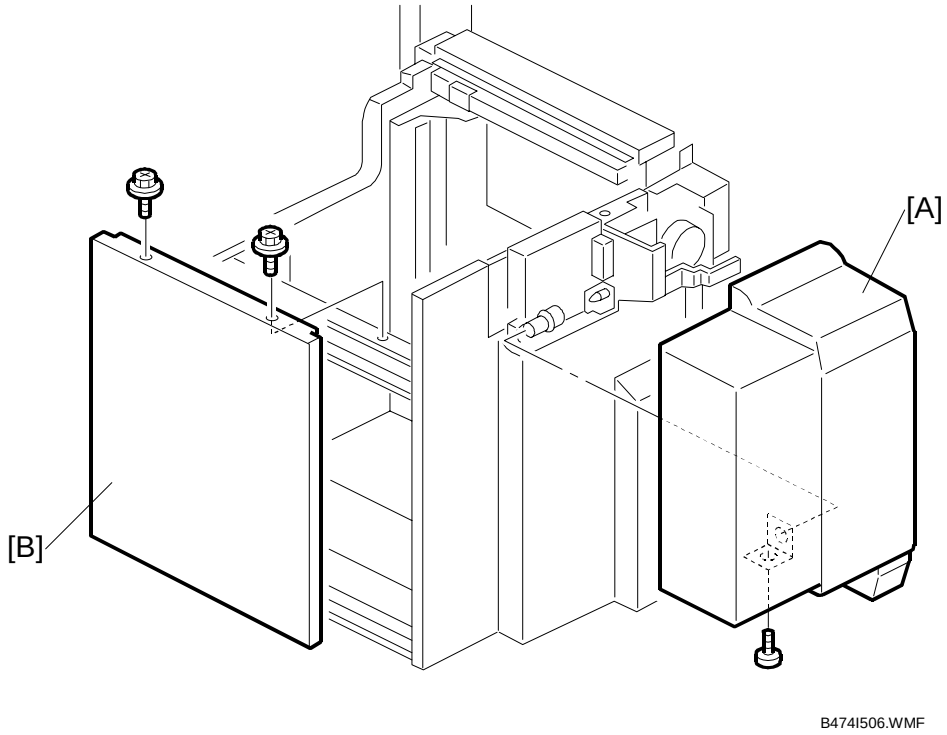

14. Attach the cover [A] (81/2" x 14"/B4) (☞ x 1).
15. Attach the right cover [B] (☞ x 2).
16. Connect the LCT to the machine.
17. Turn the machine on.
18. Enter the SP mode.
19. Do **SP5959 005**.
20. Input “5” for B4 SEF or “6” for 81/2" x 14" SEF.

Downloaded from www.Manualslib.com manuals search engine

1.8 2000/3000 SHEET FINISHERS (B700/B701)

1.8.1 ACCESSORIES

Description	Q'ty
1. Cushion (with double-sided tape)	1
2. Ground (earth) plate	1
3. Tapping screws - M4 x14	4
4. Tapping screws - M4 x 8	2
5. Leveling Shoes	3
6. Upper output tray	1
7. Lower output tray (B700 Only)	1
8. Front joint bracket	1
9. Rear joint bracket	1
10. Gasket Seal	1
11. Support Tray	1
12. Support Tray (Not used)	1
13. Accessory Pocket	1

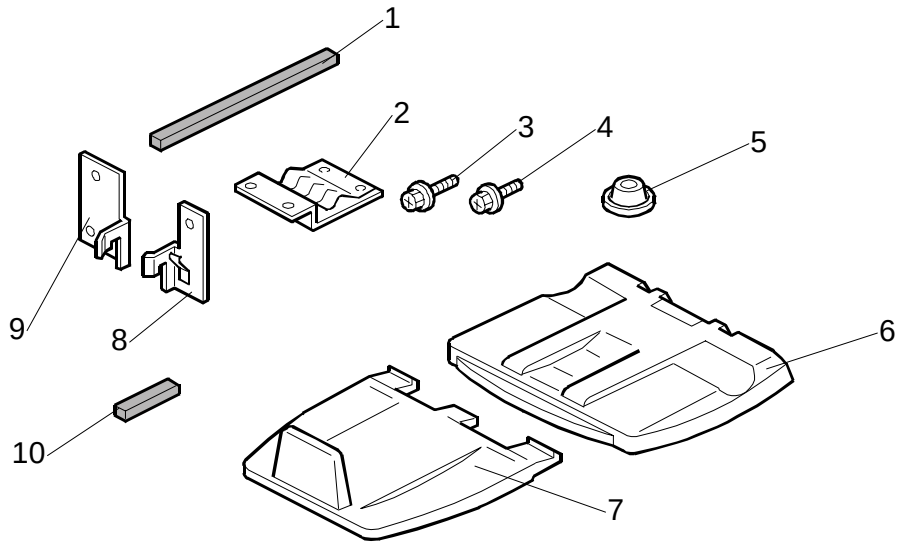

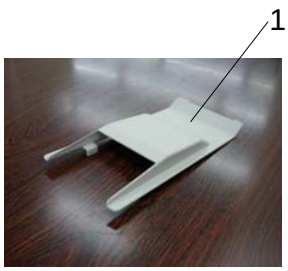

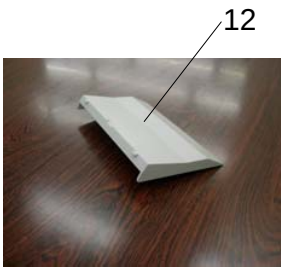

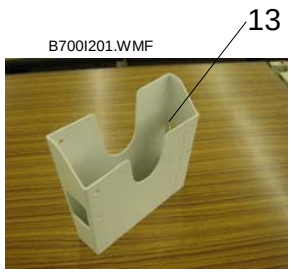

Downloaded from www.Manualslib.com manuals search engine

1.8.2 INSTALLATION

This section shows the installation instructions for two finishers:

- **B700 2000-Sheet Booklet Finisher:** This can do punching, shifting, stapling, and saddle-stitching with staples. This booklet finisher can be used with the e-STUDIO4500c/5500c.
- **B701 3000-Sheet Finisher**: This can do punching, shifting, and stapling but with no saddle-stitching unit. This finisher can be used with the e-STUDIO4500c/5500c.

NOTE:

- Differences in the installation procedures are shown as "**B700**" or "**B701**".
- Be careful not to touch the sharp edge on the guide [A] indicated in the figure.

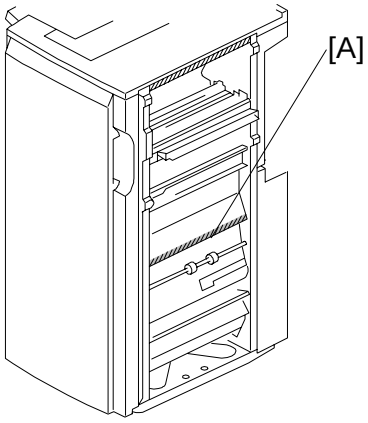

B700I209.MWF

⚠WARNING!

Always turn the machine off and disconnect the machine power cord before you do these procedures.

Downloaded from www.Manualslib.com manuals search engine

Removing Tapes and Packing Materials

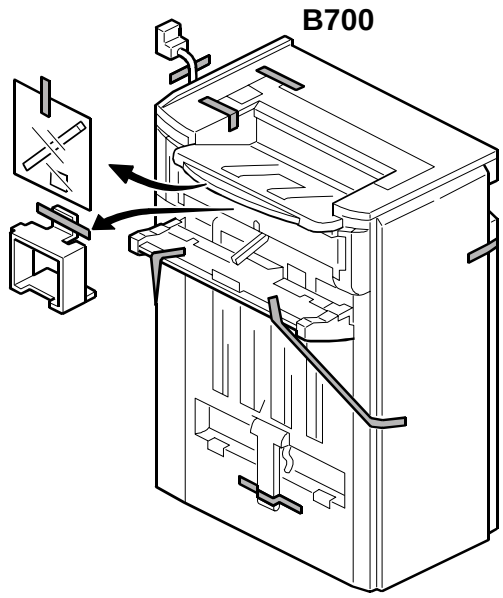

B700I102.WMF

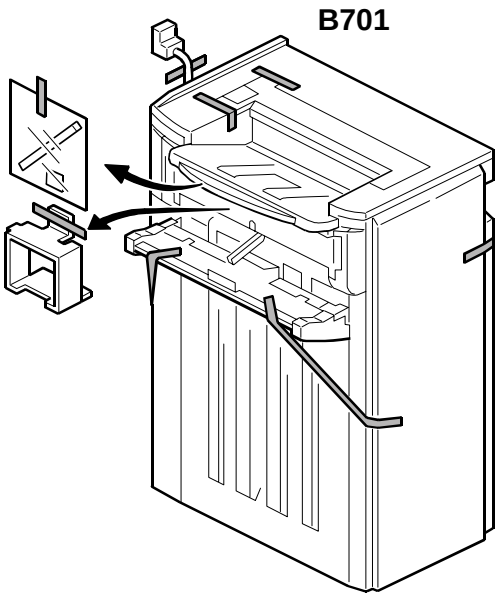

B701I102.WMF

1. Remove the machine from its box, and remove all the wrapping.
2. Remove all filament tape and packing material from the finisher.

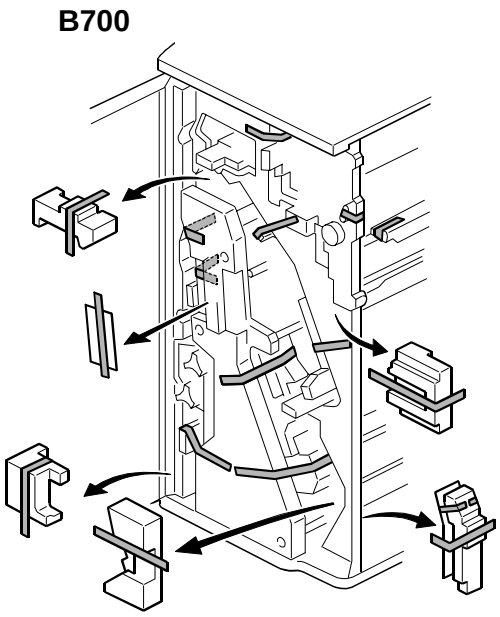

B700I202.WMF

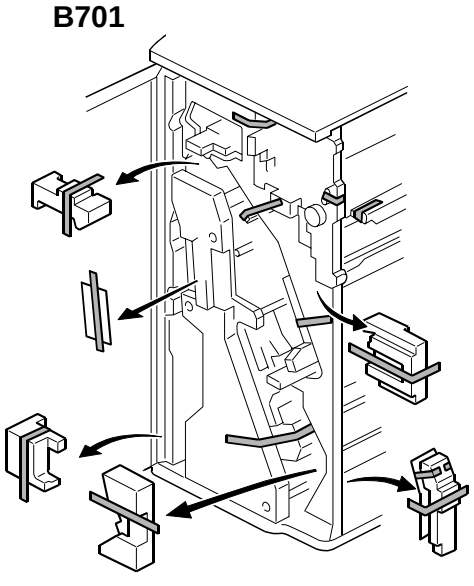

B701I202.WMF

3. Open the front door.
4. Remove all tapes and packing materials inside the finisher.

Downloaded from www.Manualslib.com manuals search engine

B700

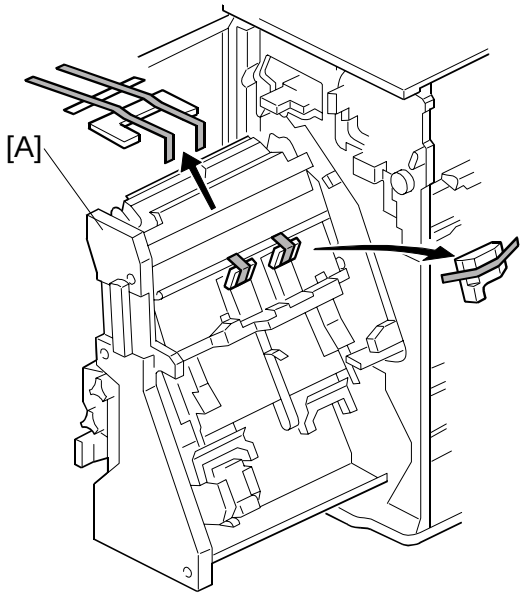

B700I204.WMF

B701

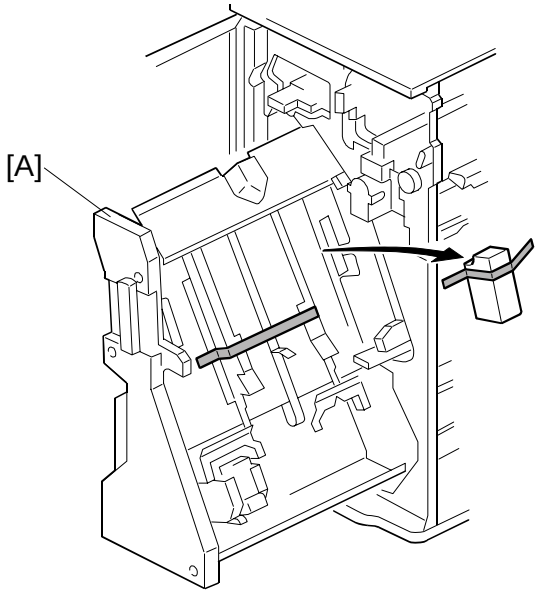

B701I204.WMF

5. Pull the jogger unit [A] out of the finisher.
6. Remove the tapes and retainers.

Downloaded from www.Manualslib.com manuals search engine

Docking the Finisher to the Copier

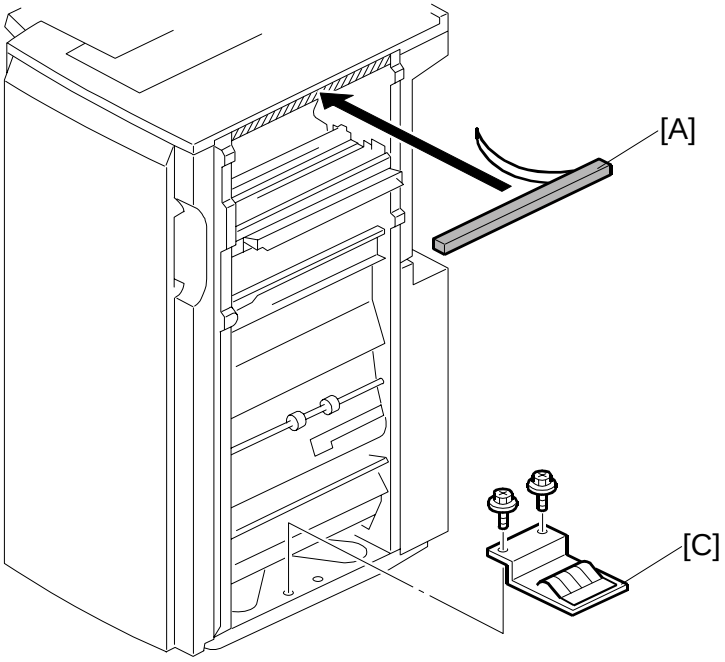

B700I106.WMF

1. If you will not install the Cover Interposer B704:
   - Remove the strip from the sponge cushion [A] and attach it to the finisher, then go to Step 2.

     Important! Do not put the sponge in a position that will prevent air flow through the air duct [B] on the copier after the finisher is connected to the copier.
   - Use a short screwdriver to attach the grounding plate [C] (🔩 x 2, M3 x 6).

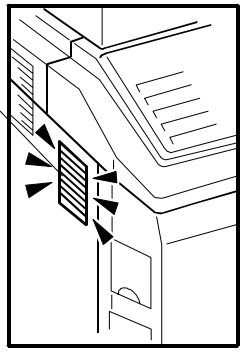

B132R734.WMF

   If you will install the Cover Interposer B704:
   - Do not attach the sponge cushion to the finisher. It must be attached to the cover interposer.
   - Do not attach the grounding plate [C] to the finisher. It must be attached to the cover interposer.
   - Install the interposer on the finisher before you dock the finisher to the copier. (☛1.15: do the complete procedure.) Then come back to the procedure for the B700/B701 finisher, and continue from 'Attaching the Trays'.

Downloaded from www.Manualslib.com manuals search engine

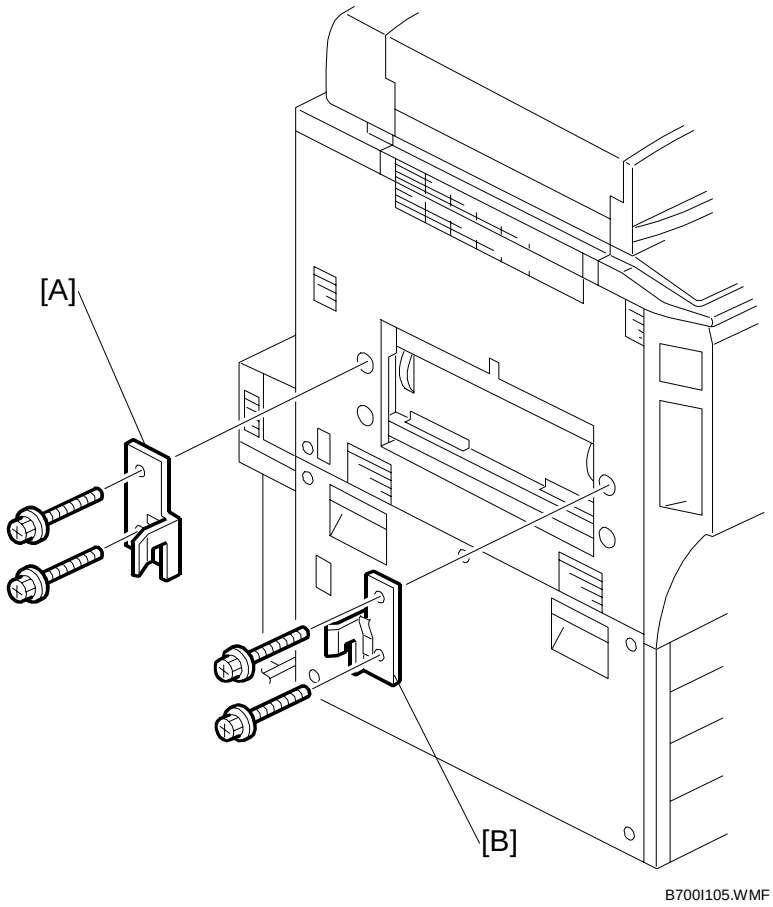

2. Attach the rear joint bracket [A] (x 2, M4 x 14).
3. Attach the front joint bracket [B] (x 2, M4 x 14).

Downloaded from www.Manualslib.com manuals search engine

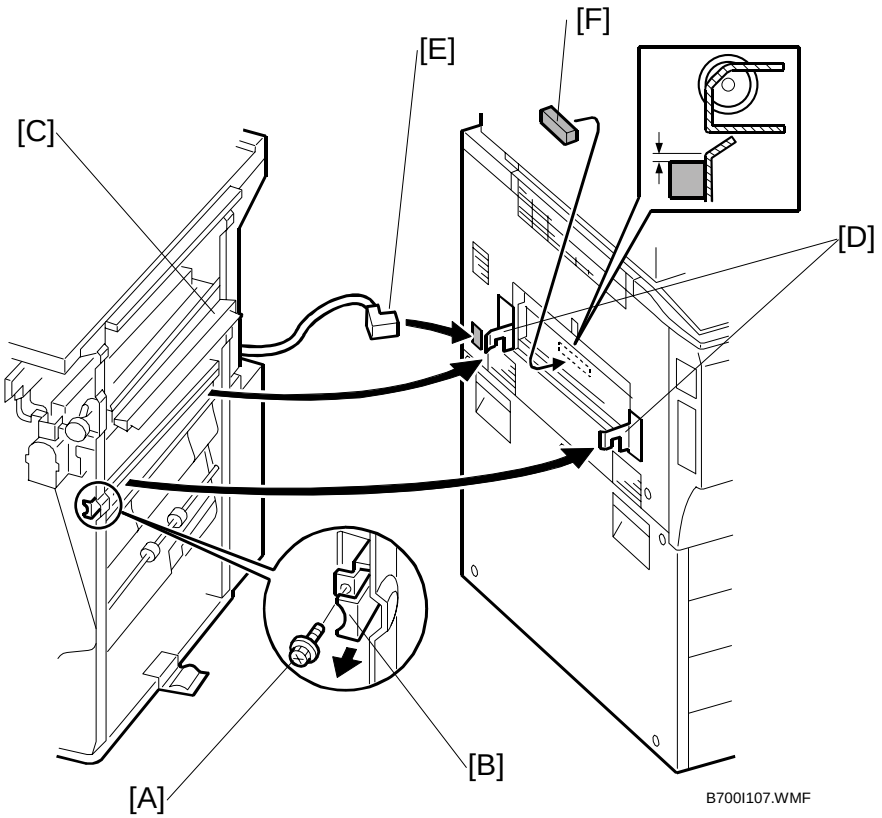

4. Remove the screw [A] to release the lock lever [B] (x 1).
5. Slowly push the finisher against the side of the machine until the brackets [D] go into their slots. If you do this too quickly, you will bend and cause damage to the paper-entrance guide plates [C].
6. Attach and tighten the screw removed in Step 5.
7. Connect finisher connector [E] to the main frame.
8. Attach the gasket seal [F] as shown.

Important! Check the duct ❶ on the left side of the machine. Make sure that the sponge does not block this duct.

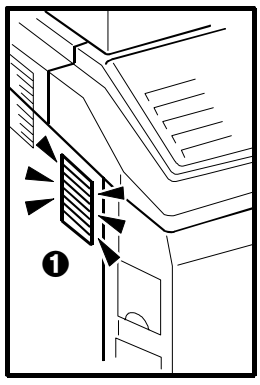

Downloaded from www.Manualslib.com manuals search engine

Attaching the Trays

B700

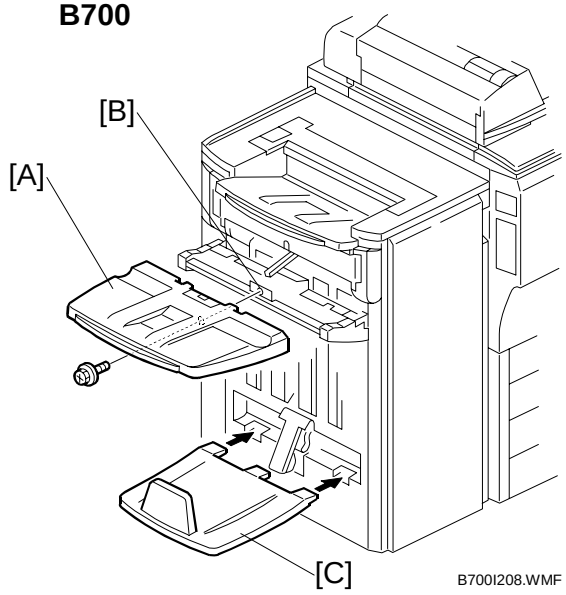

B701

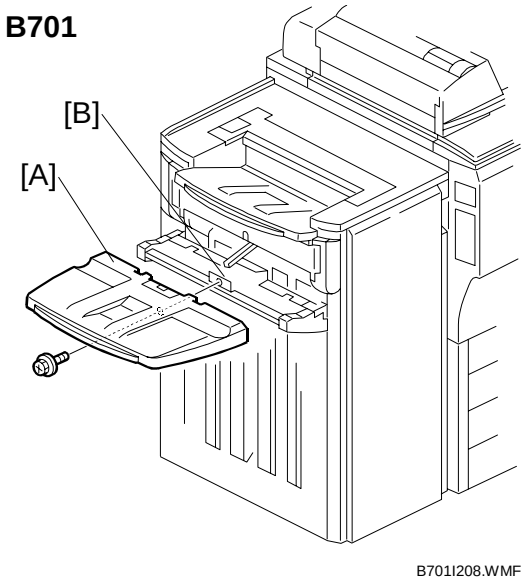

B700

1. Attach the upper output tray [A] (☞ x 1, M3 x 6).
   NOTE: Make sure that the metal plate [B] is on the top of the tray.
2. Attach the lower output tray [C].

B701

1. Attach the upper output tray [A].
   NOTE: Make sure that the metal plate [B] is on the top of the tray.

Downloaded from www.Manualslib.com manuals search engine

Leveling the Finisher

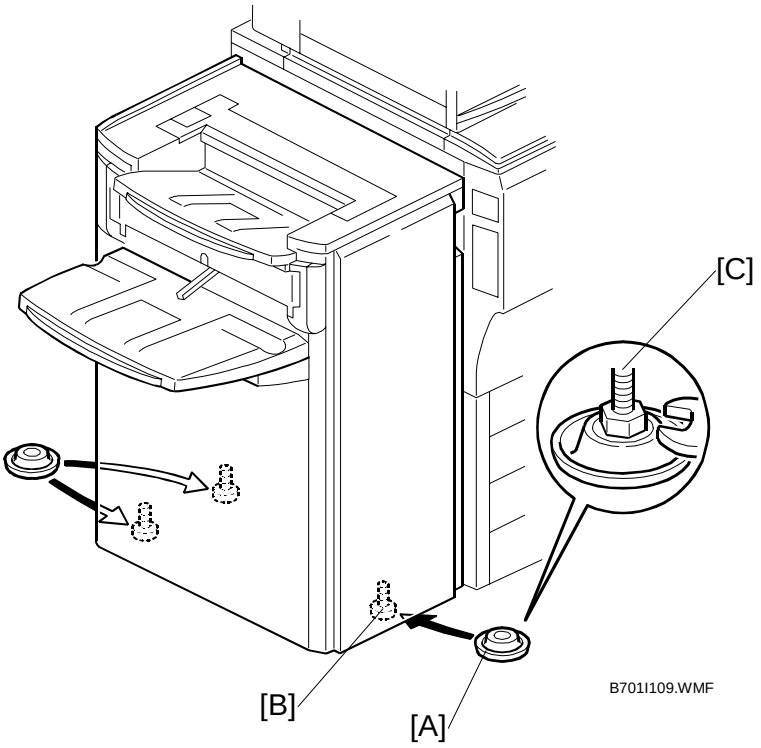

1. Put the leveling shoes [A] (x 3) below the feet [B].
2. Use a wrench to adjust the height of the screws [C] to make the machine level.

Downloaded from www.Manualslib.com manuals search engine

Support Tray

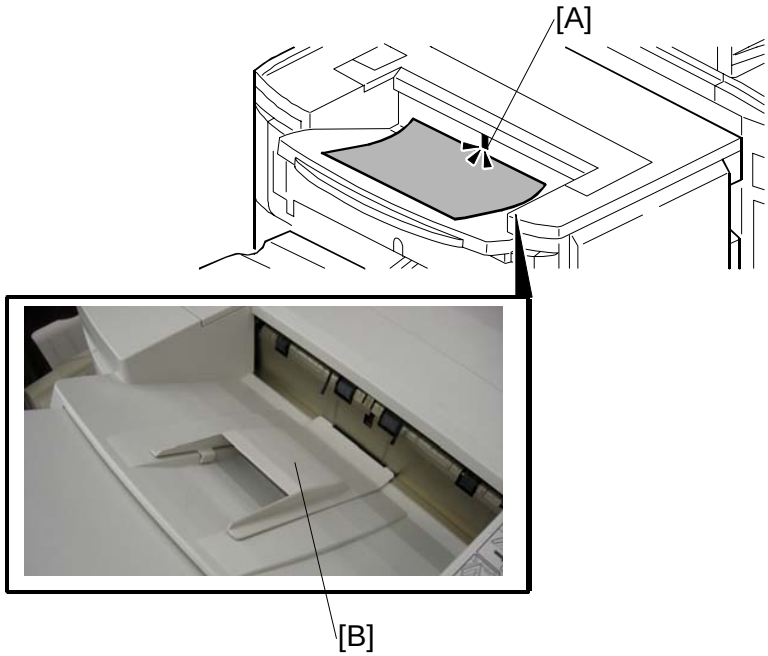

B700I110.WMF

Take the following steps if the "Exit Tray Full" message displays even though the exit tray is not full. (The message is caused by the trailing edges of excessively curled paper activating the tray full sensor [A] before the tray is actually full.)

1. Remove the paper form the paper feed tray, turn it upside down, then print.
2. If Step 1 does not solve the problem, place the support tray [B] on the exit tray as shown at figure.

NOTE: Accessory pocket: Attach this pocket to the rear cover of the finisher. Keep the support trays inside this pocket when they are not being used.

Downloaded from www.Manualslib.com manuals search engine

Selecting the Staple Supply Name

Enter the SP mode and input this information.

5841	Supply Name Setting	These names show when the user prints the Inquiry List Push the Counter key, then push 'Print Inquiry List'. Push the Inquiry button on the initial User Tools screen.
013	Staple Std3	Input the name of the staples that are used for standard stapling (not booklet stapling). This setting should be done for the B700 and B701.
022	Staple Bind2	Input the name of the staples that are used for booklet stapling (saddle-stitching). This setting is necessary only for the B700.

Enabling Booklet Binding (B700 Only)

To enable booklet binding (saddle-stitching) for the B700, you must select the center stapling position.

1. Press the User Tools key.
2. Press "Copier/Document Server Features".
3. Press the "Input/Output" tab.
4. Press the "Stapling Position" button and press the center (saddle-stitch) stapling symbol.
5. Go out from the User Tools mode. Set the number of copies, press the center stapling symbol on the operation panel, then start the print job.

Downloaded from www.Manualslib.com manuals search engine

1.9 PUNCH UNIT (B702)

The Punch Unit B702 is installed in the 2000/3000 Sheet Finisher B700/B701.

1.9.1 ACCESSORIES

Check the accessories and their quantities against this list.

Description	Qty
1. Punchout Waste Unit	1
2. Slide Drive Unit	1
3. Punch Waste Hopper	1
4. Screws (M3 x 6)	5
5. Side-to-Side Detection Unit	1
6. Punching Unit	1

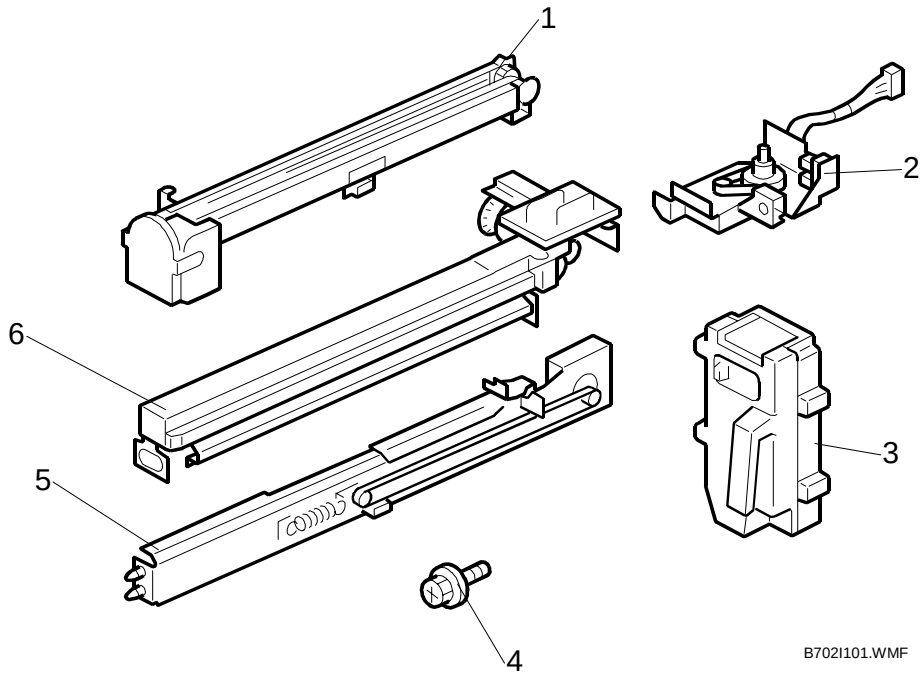

⚠WARNING!

Always turn the machine off and disconnect the machine power cord before you do this procedure.

Downloaded from www.Manualslib.com manuals search engine

1.9.2 INSTALLATION

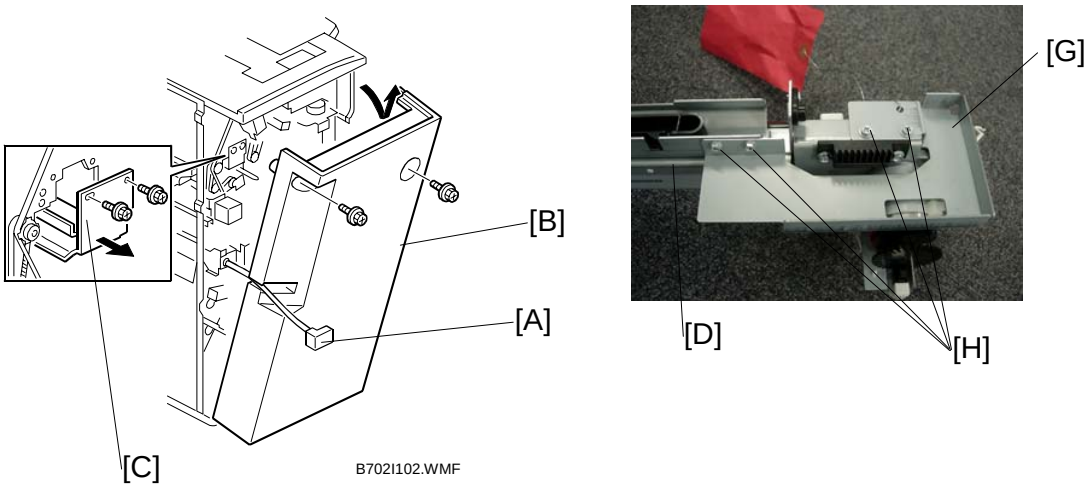

B702I102.WMF

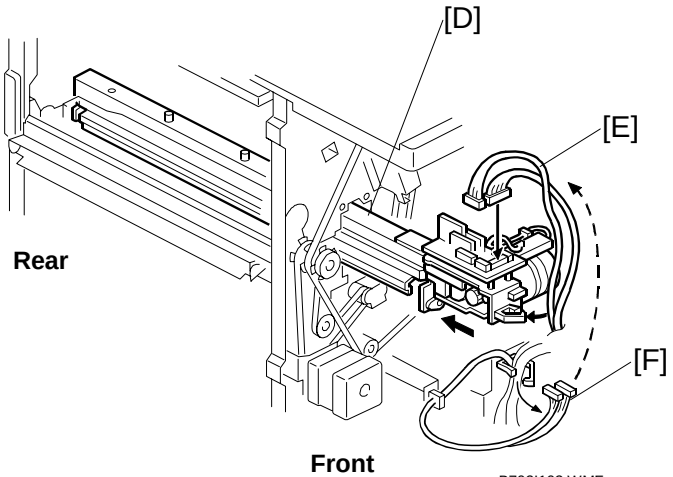

B702I103.WMF

1. If the finisher is connected to the copier, disconnect the power connector [A] and move the finisher away from the copier.
2. Remove the rear cover [B] (x 2) and open the front door.
   NOTE: At the bottom of the rear cover, make sure to disconnect the tabs that attach the cover to the frame.
3. Remove the guide plate [C] (x 2).
4. Remove the shipping retainer bracket [G] (screws [H]). Move the punching unit [D] along its rails into the finisher. Make sure that the pin engages correctly at the front and rear.
5. Connect and attach the punching unit [E] (x 2, x 1).
   - The cables [F] are coiled and attached to the PCB.
   - Attach connectors to **CN601** and **CN602.**

Downloaded from www.Manualslib.com manuals search engine

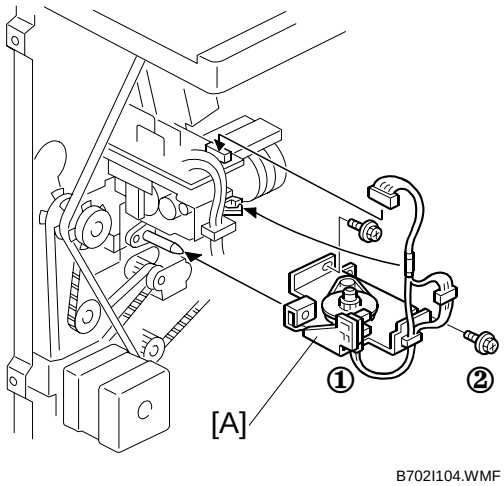

B702I104.WMF

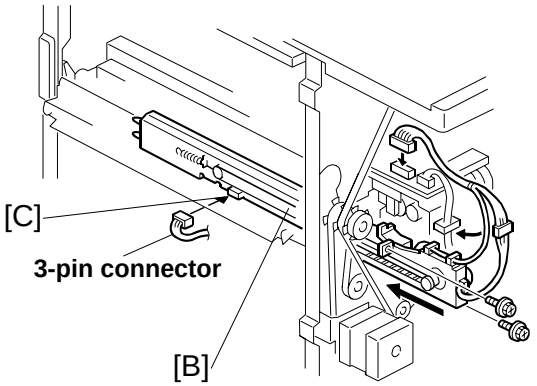

B702I105.WMF

6. Attach the slide drive unit [A] to the finisher and connect it to the punching unit (x 2, x 1). Push in the slide drive unit at ① when you attach screw ②.
7. Make sure that the punching unit moves freely and is not blocked by the screws.
8. Put the side-to-side detection unit [B] in the machine. Make sure that the two pins are engaged correctly at the front.
9. Make sure that the side-to-side detection unit moves smoothly on its rails. If it does not, make sure that the rails are aligned with their grooves.
10. Attach the side-to-side detection unit and connect it at the rear (x 2, x 1, x 1).
11. Pull the short connector out of the connector [C] then connect the cable (x 1).
    NOTE: This is the 3-pin connector.

Downloaded from www.Manualslib.com manuals search engine

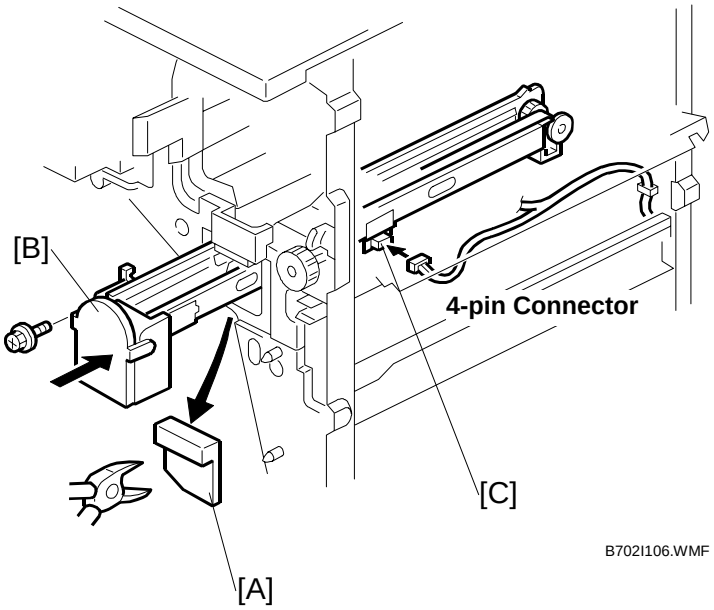

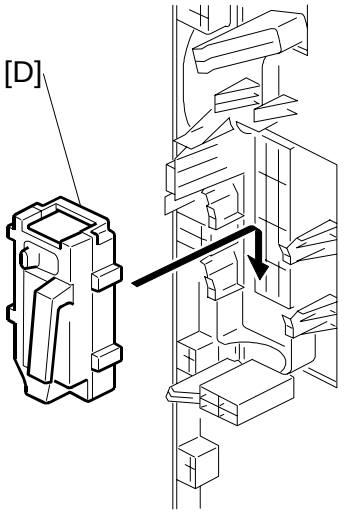

12. At the front, use a pair of wire cutters to remove the part [A] of the cover.
13. Install the punchout waste unit [B] in the finisher.
    NOTE: Make sure that the punchout waste unit moves smoothly on its rails. If it does not, make sure that the rails are aligned with the grooves.
14. Remove the short connector from the connector [C].
    NOTE: This is the 4-pin connector.
15. Connect the cable and attach the punchout waste transport unit (x 1, x 1, x 1).
16. Set the punch waste hopper [D] in its holder.

Downloaded from www.Manualslib.com manuals search engine

1.10 MAILBOX (B762)

The Mailbox B762 is installed on the 2000/3000 Sheet Finisher B700/B701.

1.10.1 ACCESSORIES

Check the accessories and their quantities against this list.

Description	Qty
1. Trays	9
2. Guide plate	1
3. Decals (bin display)	1
4. Tapping screws - M3x8	6

Downloaded from www.Manualslib.com manuals search engine

1.10.2 INSTALLATION

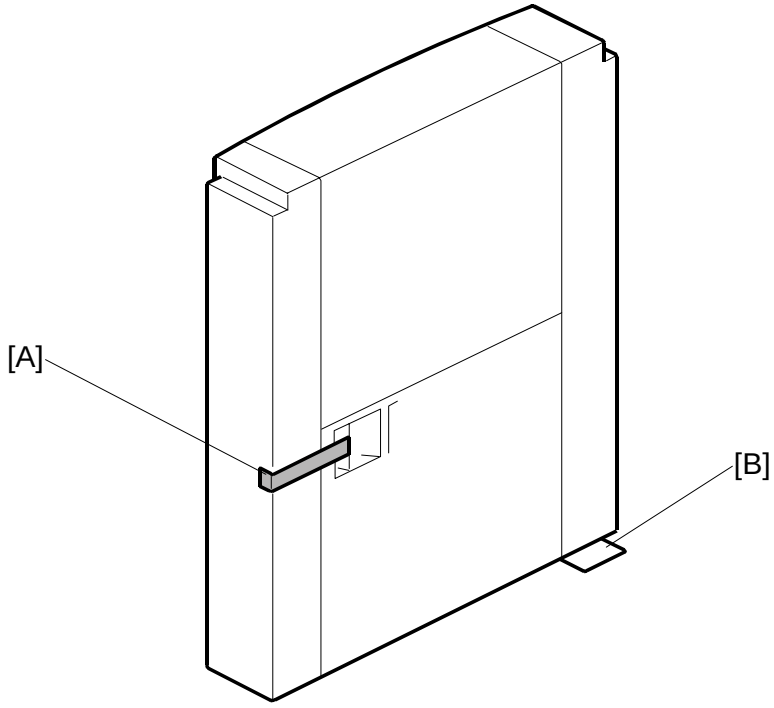

B762I101.WMF

⚠WARNING!
Turn the machine off and disconnect the machine power cord before you start this procedure.

1. Remove the filament tape [A].
   Important: Move the mailbox carefully. It is easy to cause damage to the corner leaf plate [B].

Downloaded from www.Manualslib.com manuals search engine

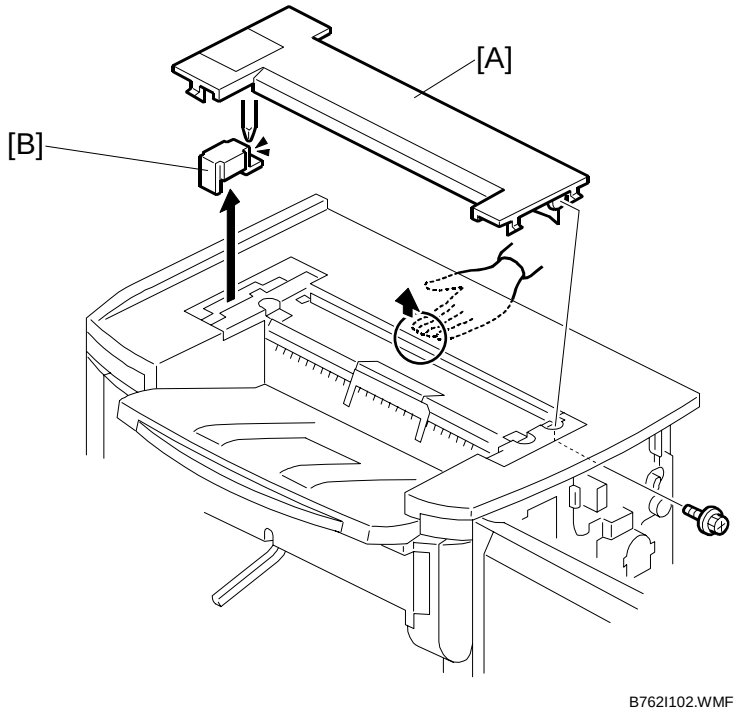

2. If the Cover Interposer Tray B704 is installed on the B700/B701, remove it.
   NOTE: The cover interposer tray and mail box cannot be installed on the finisher at the same time.
3. Remove the top cover [A] of the finisher (x1).
4. Remove the bracket [B] (x1).

Downloaded from www.Manualslib.com manuals search engine

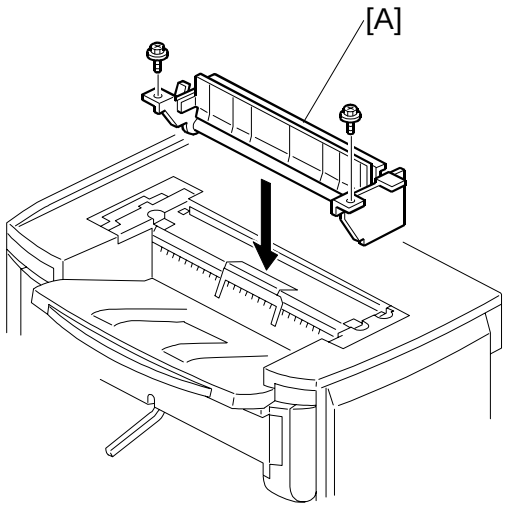

B762I103.WMF

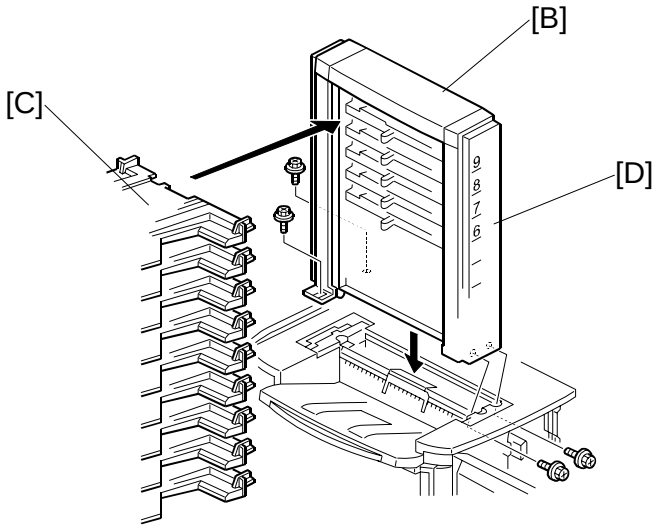

B762I104.WMF

5. Attach the guide plate [A] to the top of the finisher (x2, M3x8).
6. Attach the mailbox [B] to the top of the finisher (x4, M3x8).
7. Attach the 9 trays [C] to the mailbox.
8. Give the decals [D] to the customer. The customer will write on these and attach them at the correct location.

Downloaded from www.Manualslib.com manuals search engine

1.11 3000-SHEET FINISHER (B706), FINISHER ADAPTER (B698)

1.11.1 ACCESSORIES

3000-Sheet Finisher B706 Accessories

Check the accessories and their quantities against this list.

Description	Q'ty
1. Table Extension	1
2. Leveling Shoes	4
3. Rear Joint Bracket	1
4. Front Joint Bracket	1
5. Entrance Guide Plate	1
6. Ground (Earth) Plate	1
7. Tray Holder (Not used for e-STUDIO4500c/5500c)	1
8. Auxiliary Tray (Proof Tray) (Not used)	1
9. Auxiliary Tray (Shift Tray) (Not used)	1
10. Phillips Screws w/washer - M4 x 14	4
11. Tapping Screws - M4 x 8	2
12. Tapping Screws - M3 x 6	4
13. Tapping Screws - M3 x 8	4
14. Shift Tray	1
15. Sponge Cushion	1

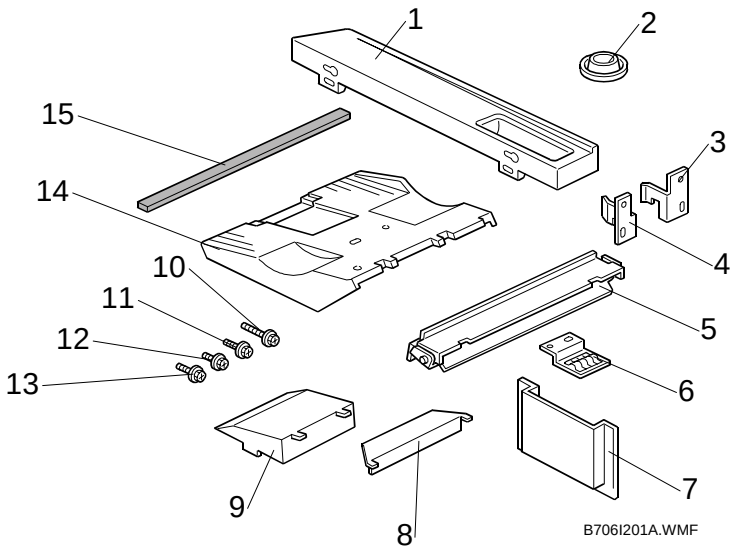

Downloaded from www.Manualslib.com manuals search engine

Finisher Adapter Kit B698 Accessories

Check the accessories and their quantities against this list.

Description	Qty
1. Upper Transport Motor Bracket	1
2. Timing Belt	1
3. Short Connector	1
4. Harness	1
5. Gasket Seal	1
6. EPROM	1
7. Harness Clamps	2
8. Serial Number Decal	1
9. Stopper Bracket	1

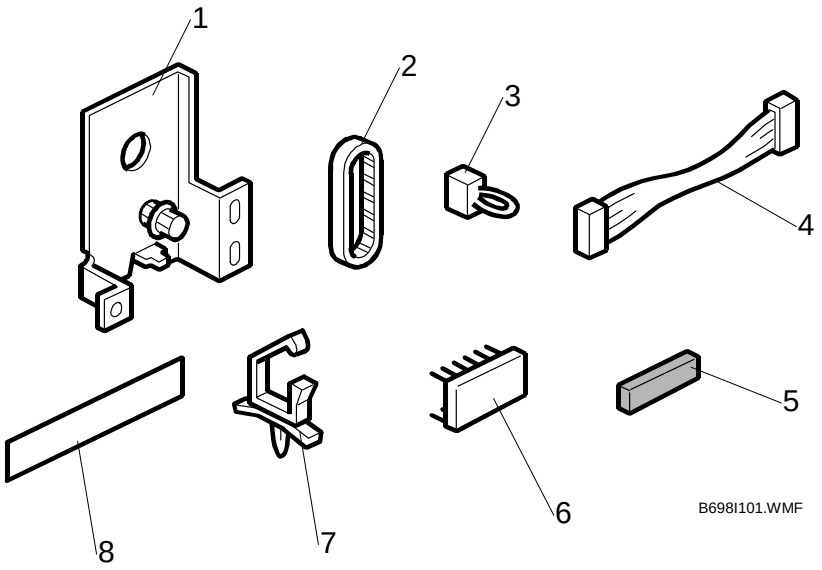

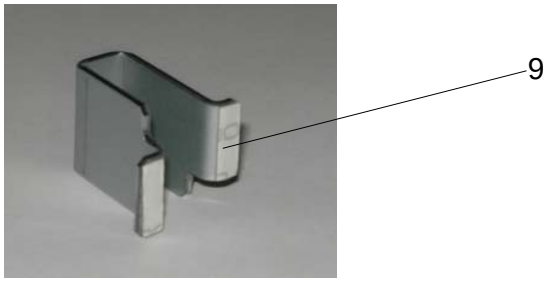

Downloaded from www.Manualslib.com manuals search engine

1.11.2 INSTALLATION

⚠WARNING!
Turn the machine off and disconnect the machine power cord before you do this procedure.

Shipping tape and retainers

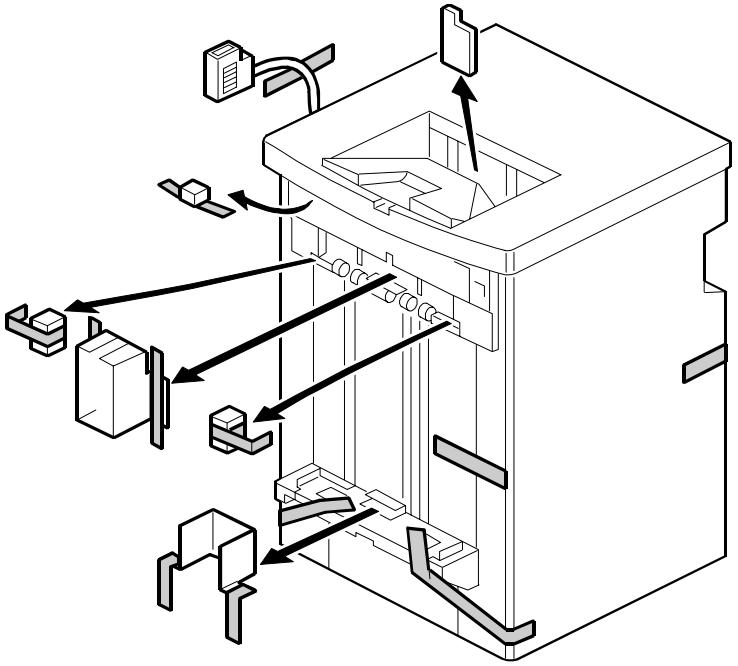

B706I002.WMF

1. Remove the finisher from its box. Remove all tapes and packing materials.

Downloaded from www.Manualslib.com manuals search engine

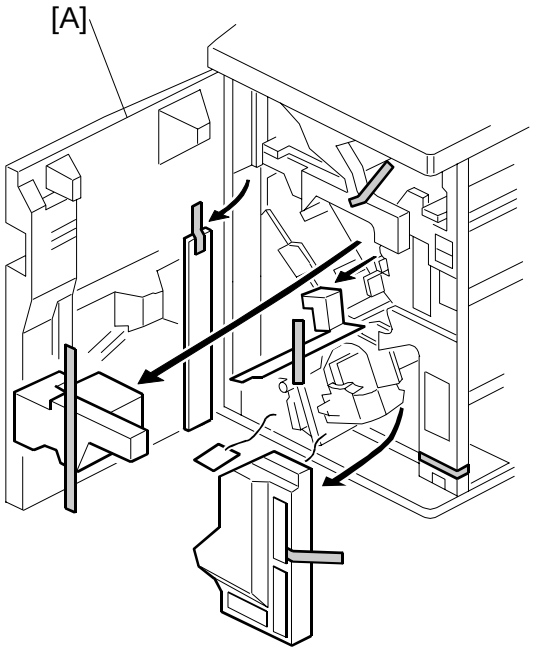

B706I102.WMF

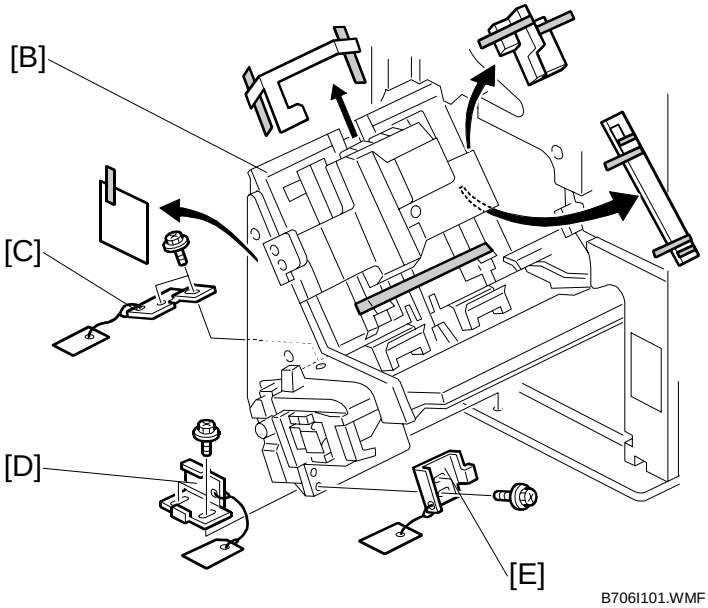

B706I101.WMF

2. Open the front door [A] and remove tape and packing materials.
3. Pull the jogger unit [B] out of the finisher.
4. Remove brackets [C], [D], and [E] (🔩 x 2 each) with their red tags and wires, and all tapes and packing materials.

Downloaded from www.Manualslib.com manuals search engine

Finisher Adapter B698 Installation

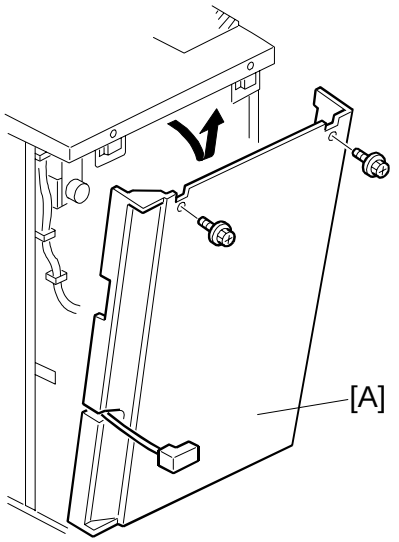

B698I102.WMF

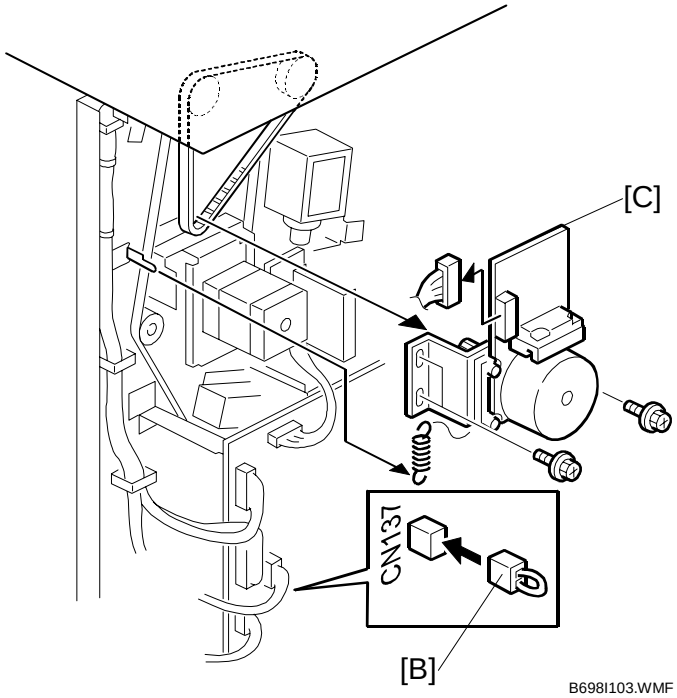

B698I103.WMF

1. Remove the finisher rear cover [A] (x2).
2. Connect the short connector [B] to CN137 on the finisher main board.
3. Remove the upper transport motor mount [C] (x1, x3, spring x1).

Downloaded from www.Manualslib.com manuals search engine

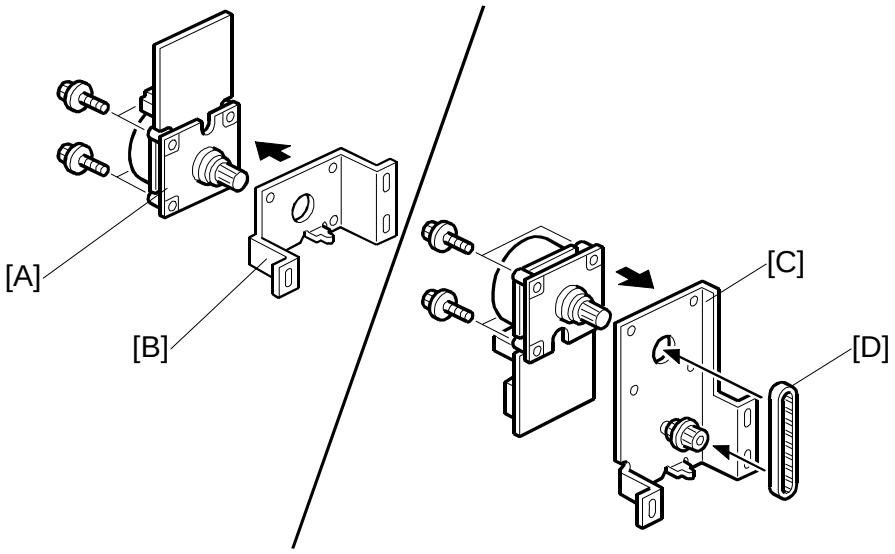

B698I104.WMF

4. Remove the transport motor [A] from the original bracket [B] (x4).
5. Set the motor on the new bracket [C] supplied with the Finisher Adapter B698.
6. Attach the timing belt [D].
7. Use the same screws to attach the transport motor to the new bracket (x4).

Downloaded from www.Manualslib.com manuals search engine

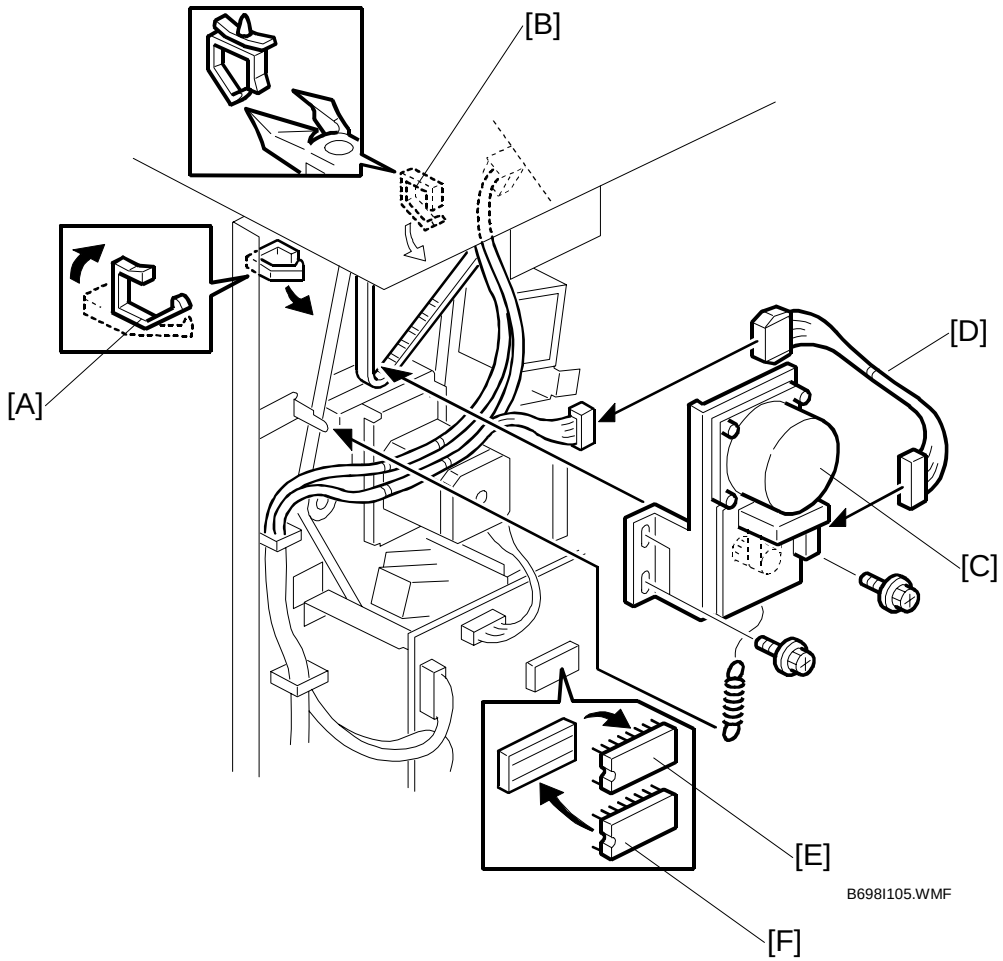

8. Remove the harness clamp [A].
9. Use wire cutters or radio pliers to remove harness clamp [B].
10. Attach the transport motor assembly [C]. (x3, x2, spring x1).
    - The harness [D] is supplied with the Finisher Adapter B698.
    - Attach the screws but do not tighten. Pull the spring slightly to apply tension, then tighten the screws.
11. Remove EPROM [E] and replace it with EPROM [F] that is supplied with the Finisher Adapter B698.

Downloaded from www.Manualslib.com manuals search engine

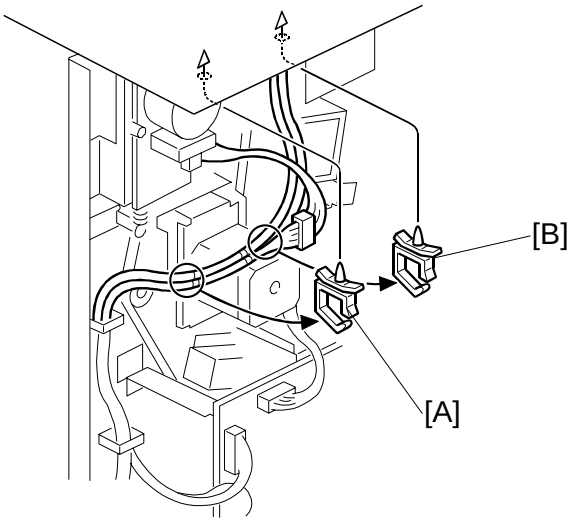

B698I106.WMF

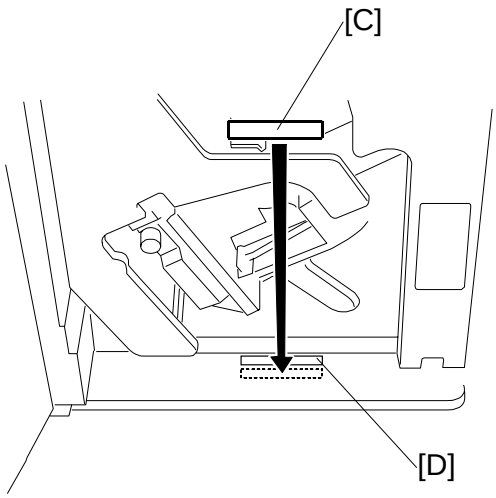

B698I107.WMF

12. Put the harness clamps [A] and [B] (supplied with the B698) in the holes (x2).
    Important: Be sure to put the harness clamps in the holes as shown.
13. Install the harnesses through the clamps and close the clamps.
14. Make sure that the harnesses do not touch the motor.
15. Attach the finisher rear cover.
16. Open the front door. Attach the serial number decal [C] below the finisher-serial-number [D] decal that is attached to the front, bottom support of the finisher frame.

Downloaded from www.Manualslib.com manuals search engine

Finisher Installation

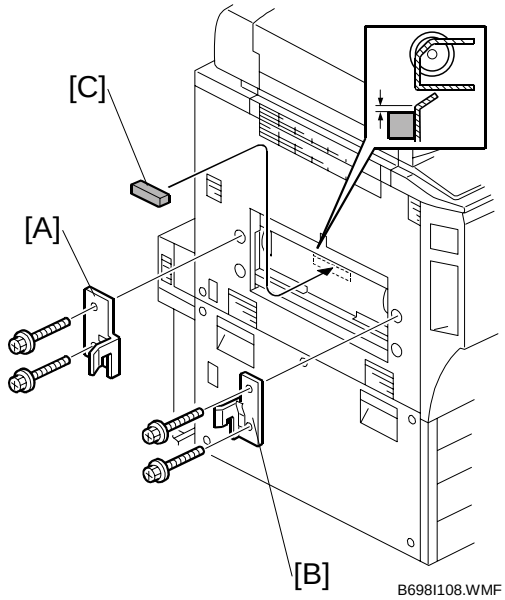

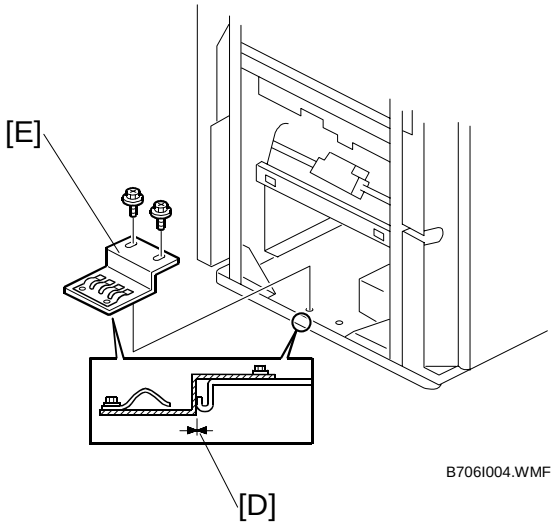

1. Attach the rear joint bracket [A] (☞ x 2) (M4 x 14).
2. Attach the front joint bracket [B] (☞ x 2) (M4 x 14).
3. Remove the connector cover [C].
4. Attach the ground plate [E] (☞ x 2) (M3 x 6).

   Important: Set the grounding plate so there is no gap [D] between the ground plate and the bottom frame of the finisher.

Downloaded from www.Manualslib.com manuals search engine

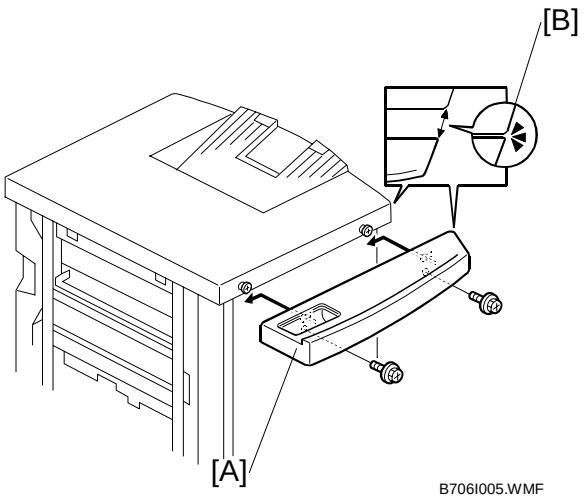

B706I005.WMF

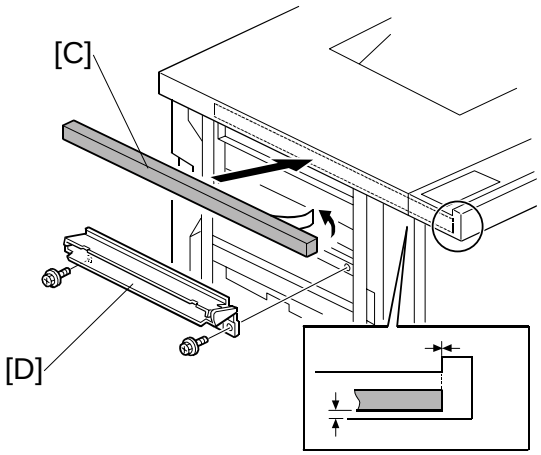

B706I207.WMF

5. Install the table extension [A] (☞ x 2) (M4 x 8).
6. Make sure that the edge of the table extension is aligned with the edge of the finisher [B].
7. <u>If you will not install the Cover Interposer Tray B704:</u>
   - Remove the strip from the sponge cushion [C], and attach it to the finisher.
   - Attach the entrance guide plate [D] (☞ x 2) (M3 x 6).

   <u>If you are going to install the Cover Interposer Tray B704</u>:
   - Do not attach the sponge cushion [C].
   - Do not attach the entrance guide plate [D] to the finisher.
   - Install the interposer tray before you dock the finisher to the copier. Then come back to the procedure for the B706 finisher, and continue from 'Selecting the Staple Supply Name'.

Downloaded from www.Manualslib.com manuals search engine

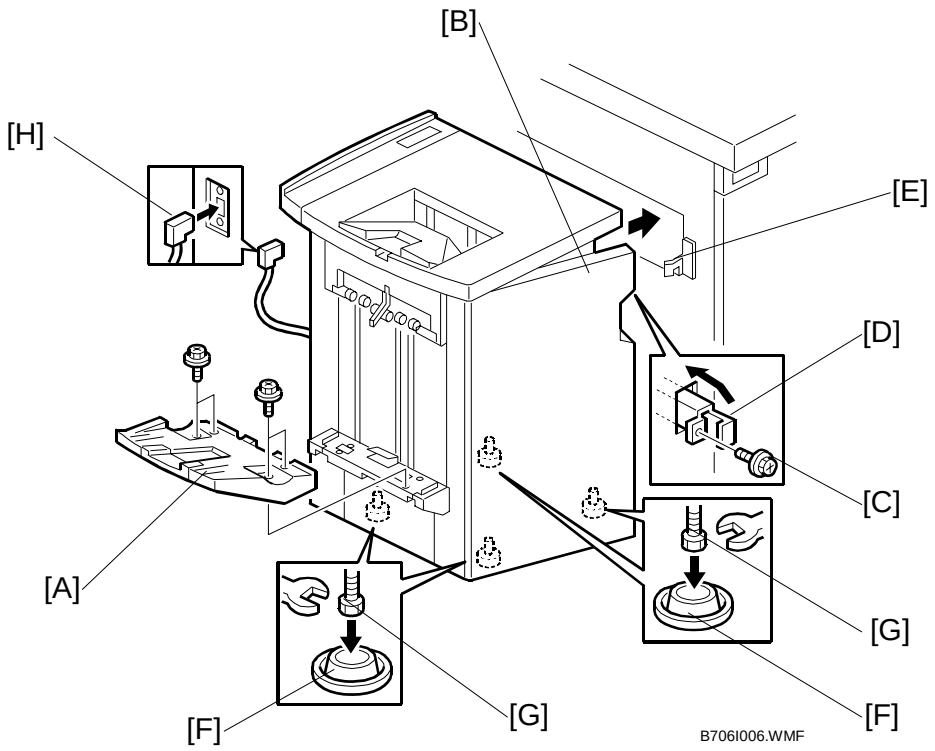

8. Attach the shift tray [A] (x 4) (M3 x 8).
9. Open the front door [B] of the finisher.
10. Remove the screw [C] from the lock lever [D], then pull out the lock lever.
11. Align the finisher on the joint brackets [E] and push the finisher against the side of the copier.
12. Make sure that the top edges of the finisher and the copier are parallel from front to rear as shown below:

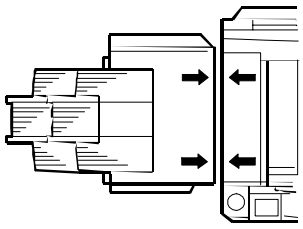

13. Set the leveling shoes [F] (x4) below the feet [G].
14. Use a wrench to adjust the height of the feet [G] to make the machine level.
15. Push in the lock lever [D], attach it (x 1), then close the front door.
16. Connect the finisher cable [H] to the copier.

Downloaded from www.Manualslib.com manuals search engine

Selecting the Staple Supply Name

Enter the SP mode and input this information

5841	Supply Name Setting	These names show when the user prints the Inquiry List. To print this list press User Tools> [Inquiry]> [Print Inquiry List]> [Start].
012	Staple Std	Input the name of the staples that are used for corner stapling. This setting should be done for the B706 with B698.

Stopper Bracket (Co-packed with B698) Installation

The stopper bracket improves stapling quality when using curled paper.

Installation Procedure:

1. Open the finisher front cover and pull the jogger unit out of the finisher.
2. Remove the inner cover [A] (2 screws).

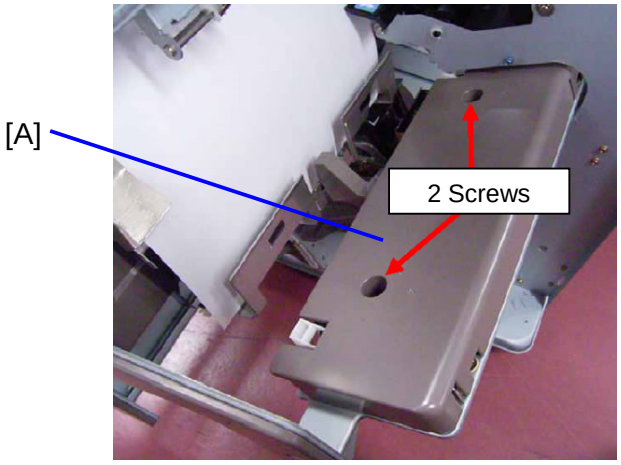

Downloaded from www.Manualslib.com manuals search engine

3. Peel the two-sided tape [B] off the stopper bracket [C].
4. Attach the stopper bracket to position [D].
   See details below.

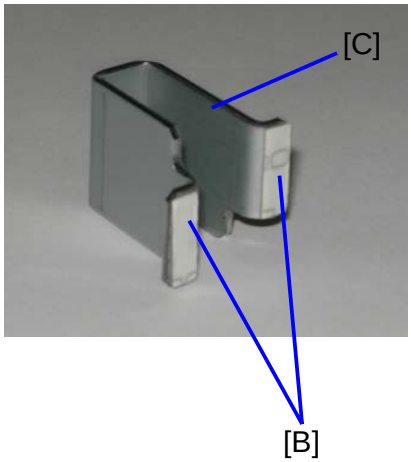

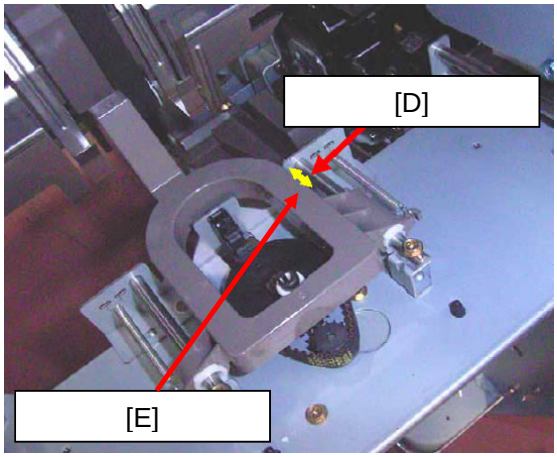

Important:

- Make sure the stopper bracket [C] is flat against the edge of bracket [G].
- Make sure the stopper bracket [C] covers the shaft [F].

NOTE: The stopper bracket [C] limits the movement of the paper pressure unit [E]. This is to prevent the paper pressure unit from pressing curled paper too much. If curled paper is pressed too hard, the staple position will sometime shift out of position,

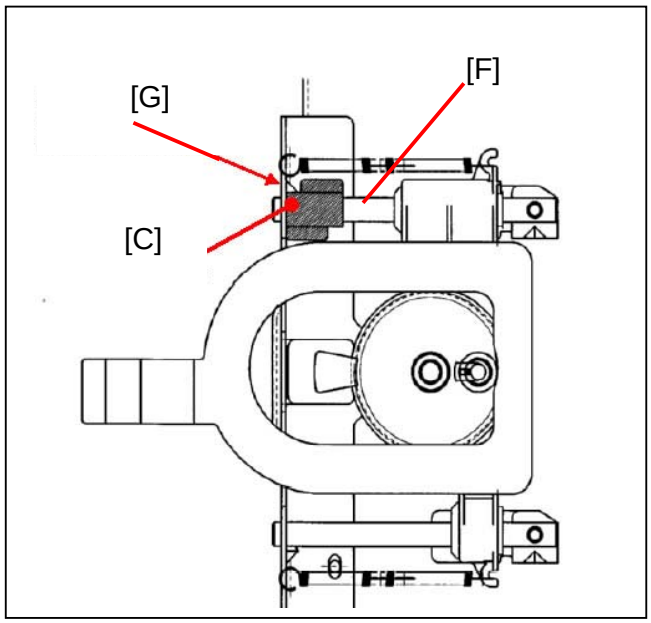

Downloaded from www.Manualslib.com manuals search engine

1.12 PUNCH UNIT B531

The Punch Unit B531 is installed in the 3000-Sheet Finisher B706.

1.12.1 ACCESSORIES

Check the accessories and their quantities against this list.

Description	Qty
1. Punch unit	1
2. Punch Waste Hopper	1
3. Sensor Arm and Sensor	1
4. Spacer (2 mm)	1
5. Spacer (1 mm)	2
6. Spring	1
7. Step Screw (large) (M4 x 10)	1
8. Tapping Screw (M4 x 10)	2
9. Step Screw (small) (M3 x 4)	1
10. Machine Screw, Washer (M4 x 6)	1
11. Knob	1

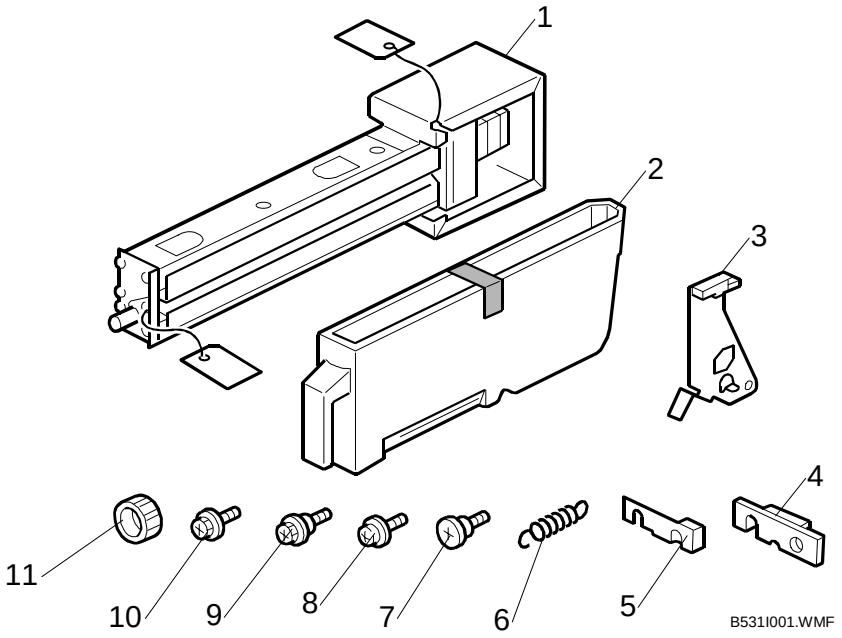

Downloaded from www.Manualslib.com manuals search engine

1.12.2 INSTALLATION

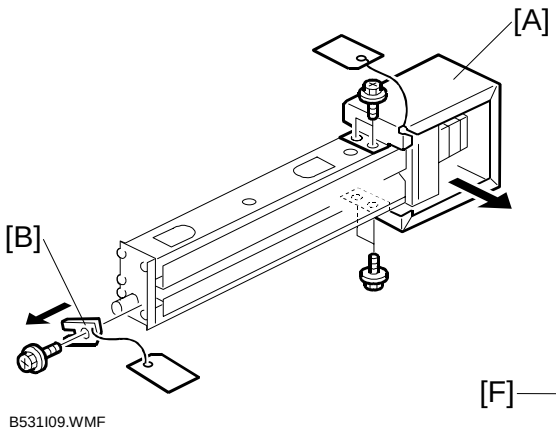

B531I09.WMF

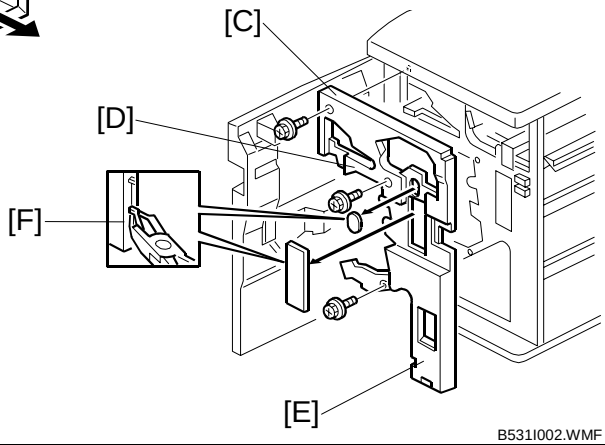

B531I002.WMF

⚠WARNING!

Turn the machine off and disconnect the machine power cord before you start this procedure.

1. If the finisher is connected to the machine, disconnect it.
2. Open the front door and remove the rear cover (🔩 x 2).
3. Remove the punch unit from its packing materials. Remove the motor protector plate [A] (🔩 x 4) and the cam lock plate [B] (🔩 x 1).
4. Remove the inner cover [C] (🔩 x 3).
5. Behind the inner cover at [D] and [E], push the lock tabs to the right to release the inner cover from the frame.
6. Remove the plastic sections [F] from the cover.

Downloaded from www.Manualslib.com manuals search engine

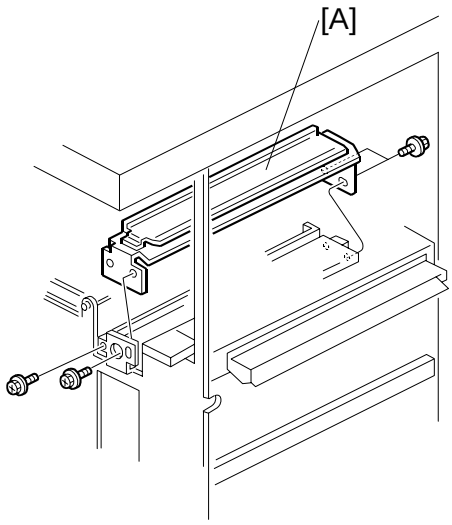

B531I003.WMF

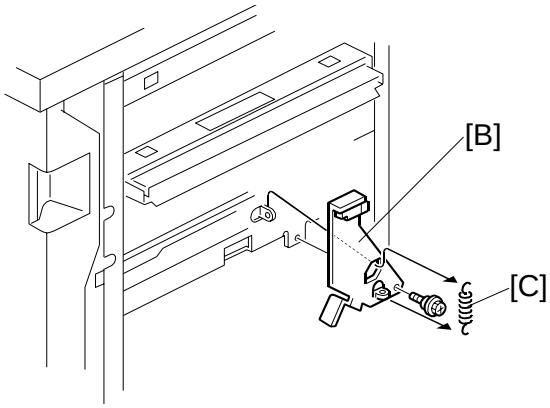

B531I004.WMF

7. Remove the paper guide [A] (🔩 x 4).
8. Install the sensor arm and sensor [B] (🔩 x 1), small step screw (M3 x 4).
   NOTE: Make sure that the sensor arm turns freely on the step screw.
9. Attach the spring [C].

Downloaded from www.Manualslib.com manuals search engine

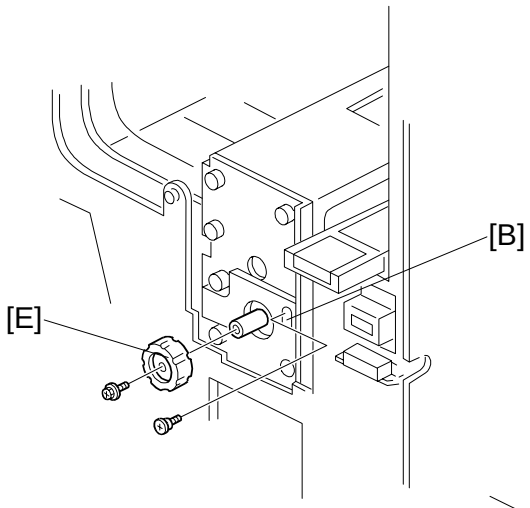

B531I006.WMF

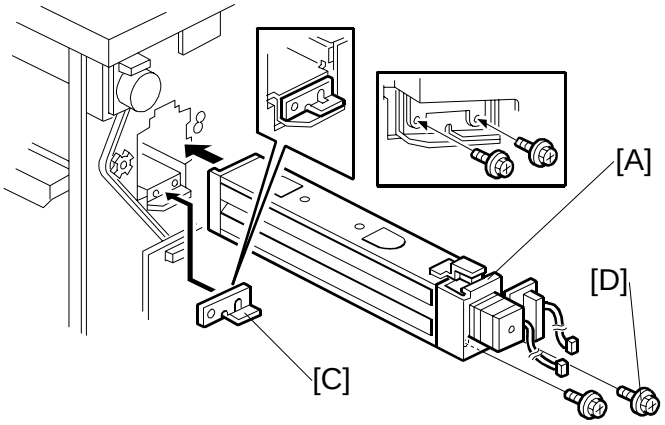

B531I005.WMF

10. At the rear side of the finisher, put the punch unit [A] in the finisher.
11. At the front side, attach the punch unit [B] with the large step screw (x 1, M4 x 10).
12. At the rear, attach the 2 mm spacer [C] and attach the tapping screws [D] to the punch unit (x 2, M4 x 10).
    NOTE: At the hole immediately above the lock lever, use one of the screws from the paper guide removed above to attach the remaining two spacers to the frame. These two spacers are used to adjust the horizontal position of the punch holes.
13. At the front side, attach the punch unit knob [E] (x 1, M4 x 6).

Downloaded from www.Manualslib.com manuals search engine

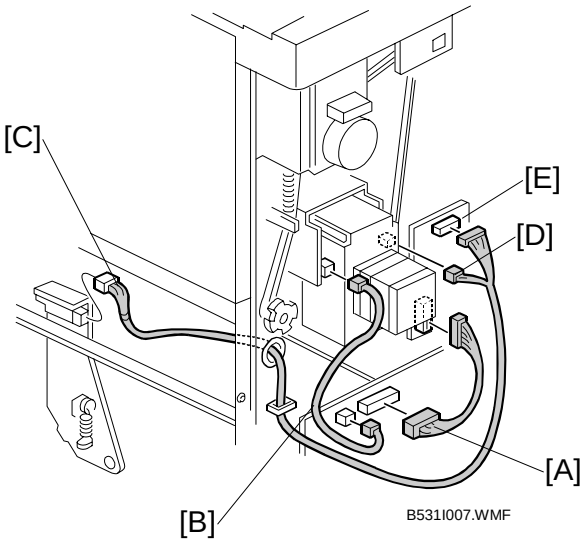

B531I007.WMF

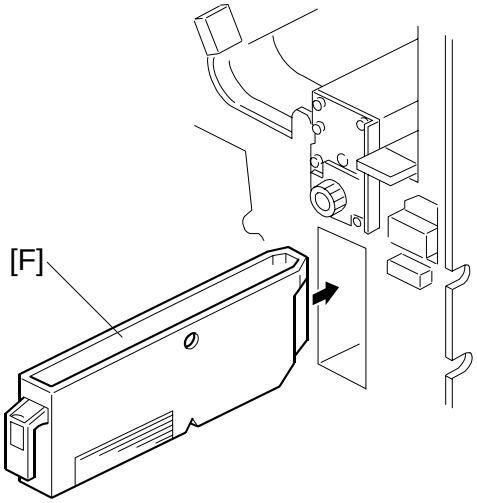

B531I008.WMF

14. Connect the PCB harness connector [A] to CN129 of the finisher PCB and to CN600 of the punch unit PCB.
15. Connect the HP Sensor-2 harness connector [B] to CN130 of the finisher PCB and to HP Sensor-2.
16. Connect the end of the hopper-full-sensor cable that has one connector [C] to the hopper full sensor on the arm (☞ x 1, clamp x 1). Then connect the other two connectors to HP Sensor-1 [D] and CN620 [E] of the punch PCB.
    NOTE: No special DIP switch settings are necessary for this punch unit. The punch unit sends an identification signal to the machine. Then the machine knows the type of punch unit that is installed.
17. Put the punch waste hopper [F] in the finisher.
18. Attach the inner cover and rear cover.
19. Close the front door and connect the finisher to the machine.

Downloaded from www.Manualslib.com manuals search engine

1.13 OUTPUT JOGGER UNIT (B703/B513)

The Output Jogger Unit B703 is installed in the 2000/3000 Sheet Finisher B700/B701.

The Output Jogger Unit B513 is installed in the 3000-Sheet Finisher B706.

1.13.1 ACCESSORIES

Check the accessories and their quantities against this list.

Description	Qty
1. Jogger Unit	1
2. Tapping Screws - M3 x 6	2

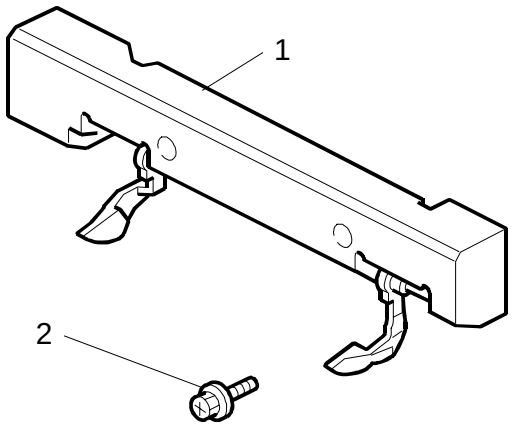

B703I101.WMF

⚠WARNING!

Always turn the machine off and disconnect the machine power cord before you do this procedure.

Downloaded from www.Manualslib.com manuals search engine

1.13.2 INSTALLATION

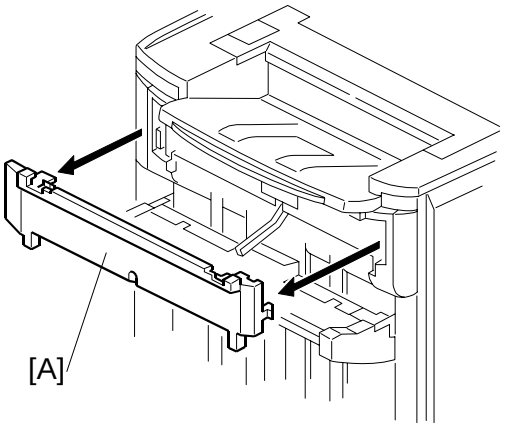

B703I103.WMF

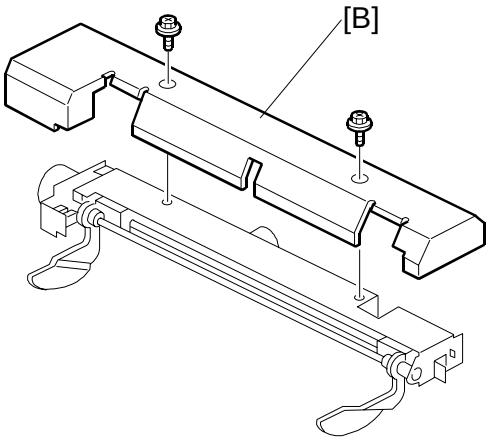

B703I102.WMF

1. Turn the main machine switch off.
2. Disconnect the finisher cable from the main frame.
3. Use the flat head of a screwdriver to remove the left upper cover [A].
4. Remove the cover plate [B] (x 2). Keep the screws.

Downloaded from www.Manualslib.com manuals search engine

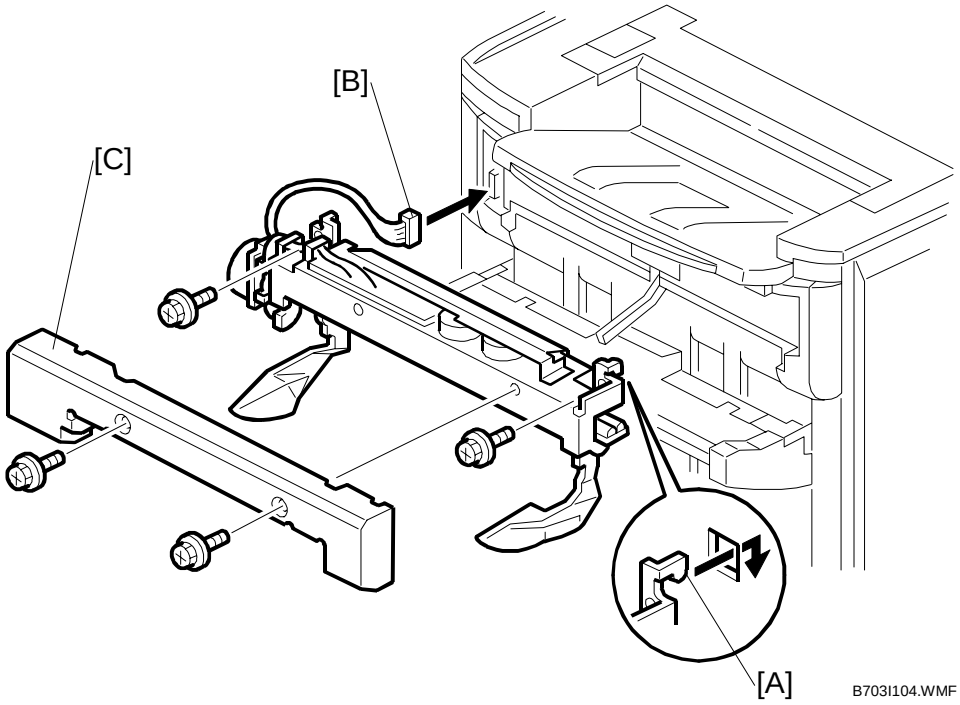

5. While you hold the jogger unit with the connector [B] on the left, put the hooks of the frame of the jogger unit [A] into the holes in the left and right side of the finisher frame.
6. Fasten connector [B] to the socket (x 1).
7. Attach the jogger unit to the finisher (x 2, M3 x 6).
8. Reattach the jogger unit cover [C] to the jogger unit (x 2).

Downloaded from www.Manualslib.com manuals search engine

1.14 COVER INTERPOSER TRAY (B704)

1.14.1 ACCESSORIES

Check the accessories and their quantities against this list.

Description	Q'ty
1. Front door extension (top)	1
2. Rear cover extension (bottom)	1
3. Shoulder screws	3
4. Tapping screws – M4 x 8	9
5. Tapping screws – M3 x 8	2
6. Tapping screws – M3 x 6	5
7. Adjuster plates (B706 Only)	2
8. Hinge Bracket (B706 Only)	1
9. Plate Extension (bottom)	1
10. Gasket Seals	2
11. Right Rear Cover Plate (B706 only)	1
12. Spacer	1
13. Anti-Static Brush	1
14. Spacer (B706 only)	1
15. Spacer (Not used)	2
16. Right front corner plate (for B706) only)	1
17. Front door extension (bottom)	

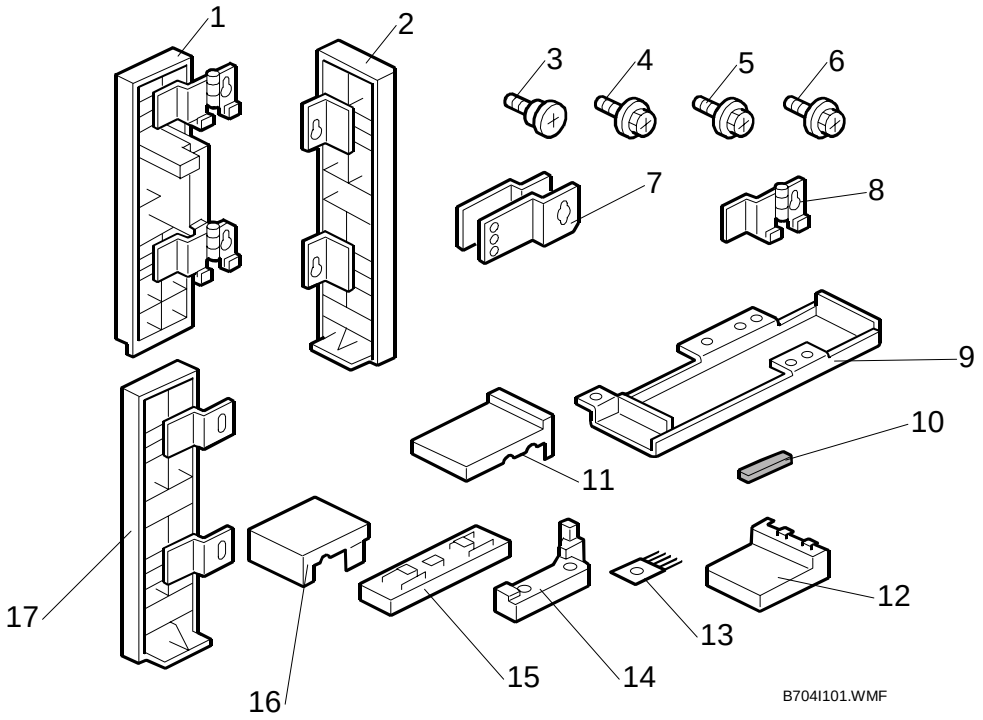

Downloaded from www.Manualslib.com manuals search engine

1.14.2 INSTALLATION

You can install the Cover Interposer Tray B704 on these finishers:

- 2000-Sheet Booklet Finisher B700
- 3000-Sheet Finisher B701
- 3000-Sheet Finisher B706

Removing Tapes and Packing Materials

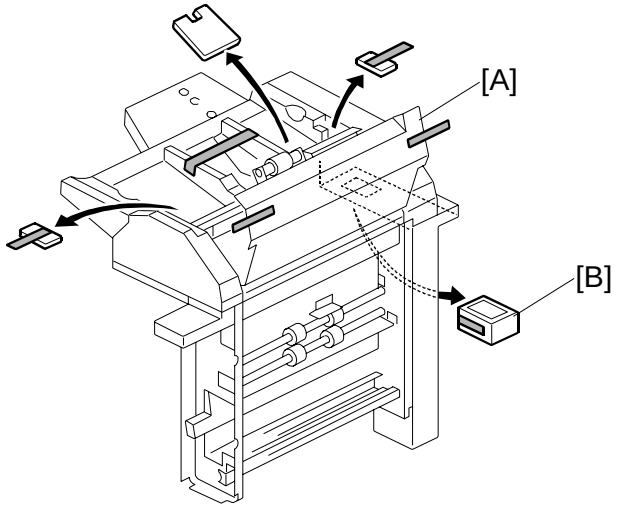

B704I102.WMF

⚠WARNING!

Make sure that the finisher is disconnected from the main machine, and that the copier is turned off and the power cord is disconnected, before you start this procedure.

1. If the finisher is connected to the machine, disconnect it.

   ⚠CAUTION

   After disconnecting the finisher, for safety remove the front and rear finisher connectors from the copier. Reattach them just before docking the finisher to the copier.

2. Remove all tape and retainers from the cover interposer tray [A].
3. Remove the tape and packing material [B] from the ground connector.

Downloaded from www.Manualslib.com manuals search engine

Preparing the Finisher (B700/B701/B706)

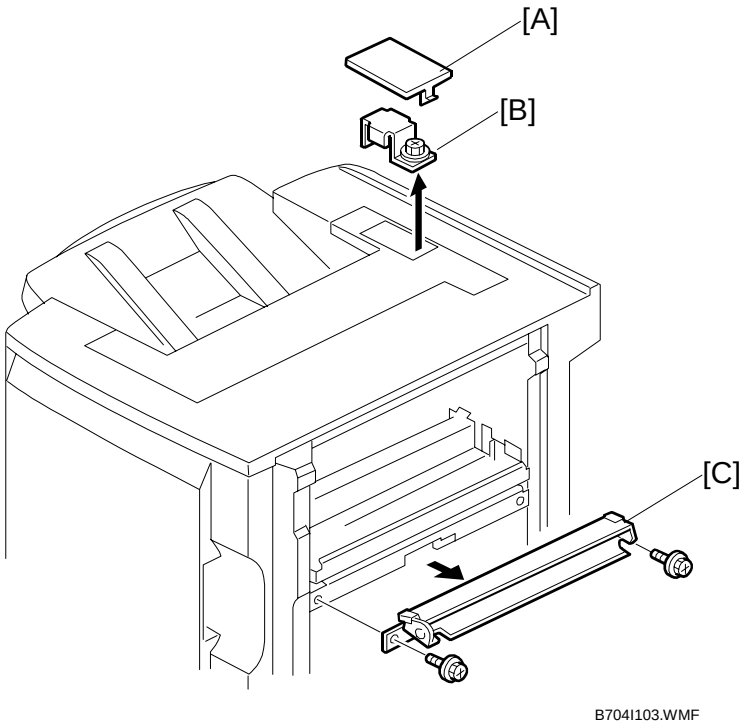

1. Remove the cover [A] of the relay connector.
2. Loosen the screw of the bracket [B] (x 1) then remove the bracket.
3. Remove the guide plate [C]. (This guide plate will be attached to the cover interposer; do not discard it.)

   Important: If you are installing the cover interposer tray with a previously installed finisher B700/B701/B706, remove the sponge strip from the finisher and save it for re-attachment to the interposer tray.
4. If you will install the B700/B701, attach the extensions to the finisher without modification. Go to "Attaching the Extensions for the B700/B701" on page 1-1093.

   -or-

   If you will install the B706, modify the extensions and attach them to the finisher. Go to "Attaching the Extensions for the B706" on page 1-106.

Downloaded from www.Manualslib.com manuals search engine

Attaching the Extensions for the B706

Important!

- The procedures in this section are for installation of the cover interposer with the B706 only.
- If you will install the cover interposer with the B700/B701, go to the next section.

Modify the Attachments for the B706

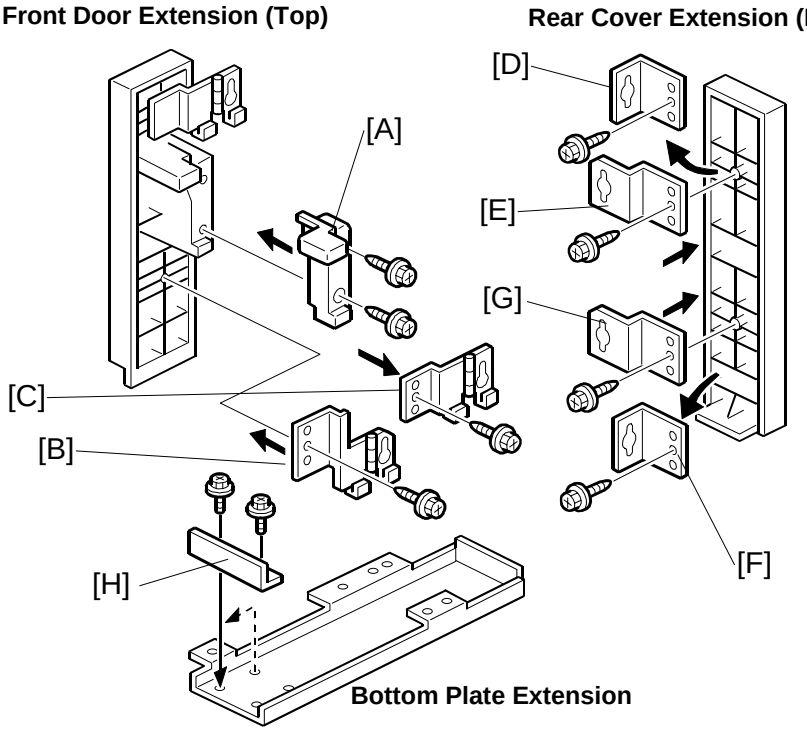

Front Door Extension:

1. Attach spacer [A] to the front door extension (top) (x 2).
2. Remove the lower hinge [B] and replace it with [C] (x 2).

Rear Cover Extension (Bottom):

3. Remove [D] and replace it with [E] (x 1).
4. Remove [F] and replace it with [G] (x 1).

Plate Extension (Bottom):

5. Remove bracket [H] and attach it to the end of the bottom plate extension (x 2).

Downloaded from www.Manualslib.com manuals search engine

Prepare the Cover Interposer for the B706

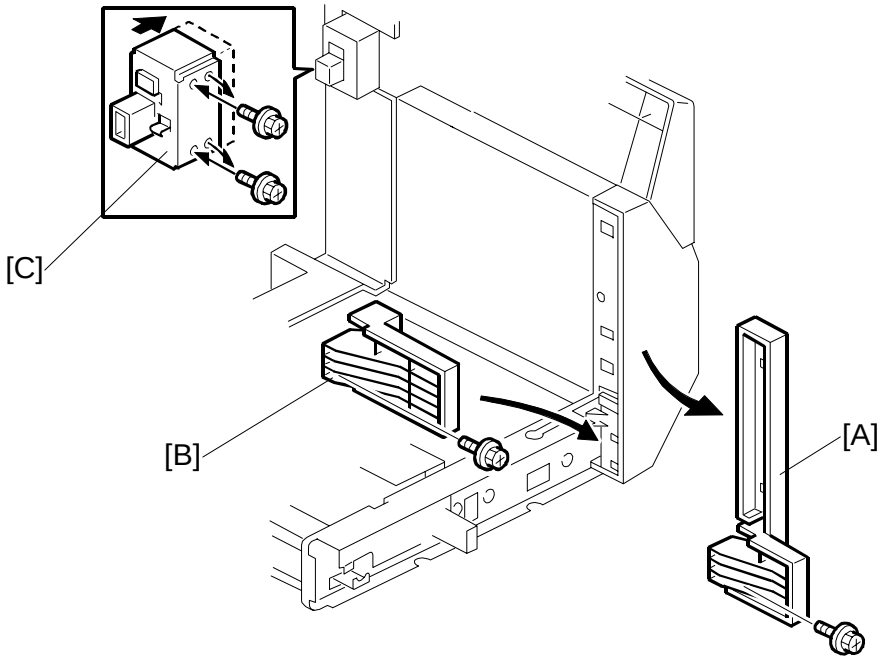

B706I900.WMF

1. Remove spacer [A] (x1).
2. Attach spacer [B] (x1).
3. Remove the screws from the connector case [C] (x2).
4. Push the connector case in the direction of the arrow until the second set of holes are aligned with the holes below, then attach the screws.

Downloaded from www.Manualslib.com manuals search engine

Attach the Extensions to the B706

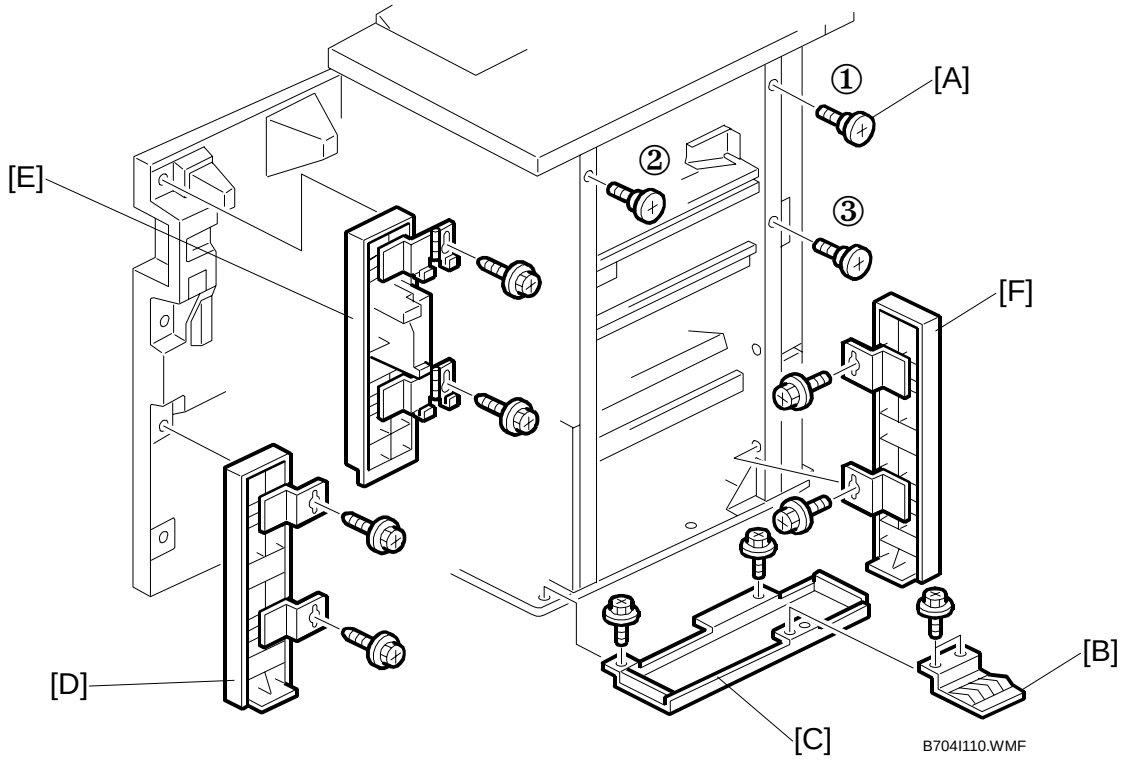

1. Attach the three shoulder screws [A] ①②③ (☞ x 3).
2. If the finisher was previously installed, remove the ground plate [B] from the finisher and keep the screws.
3. Attach the bottom plate [C] (☞ x 2, M3 x 6).
4. Attach the ground plate to the bottom plate (☞ x 2).
5. Attach the bottom front cover extension [D] (☞ x 2, M4 x 8).
   NOTE: Attach this cover first.
6. Attach the top front cover extension [E] (☞ x 2, M4 x 8).
7. Set two screws into the holes provided for the rear cover extension [F] (☞ x 2, M3 x 6).
8. Set the keyholes of the rear cover extension over of the heads of the screws.
9. Press up on the bottom of the rear cover extension to close the gap at the top of the cover, then tighten the screws.

Downloaded from www.Manualslib.com manuals search engine

Attaching the Extensions for the B700/B701

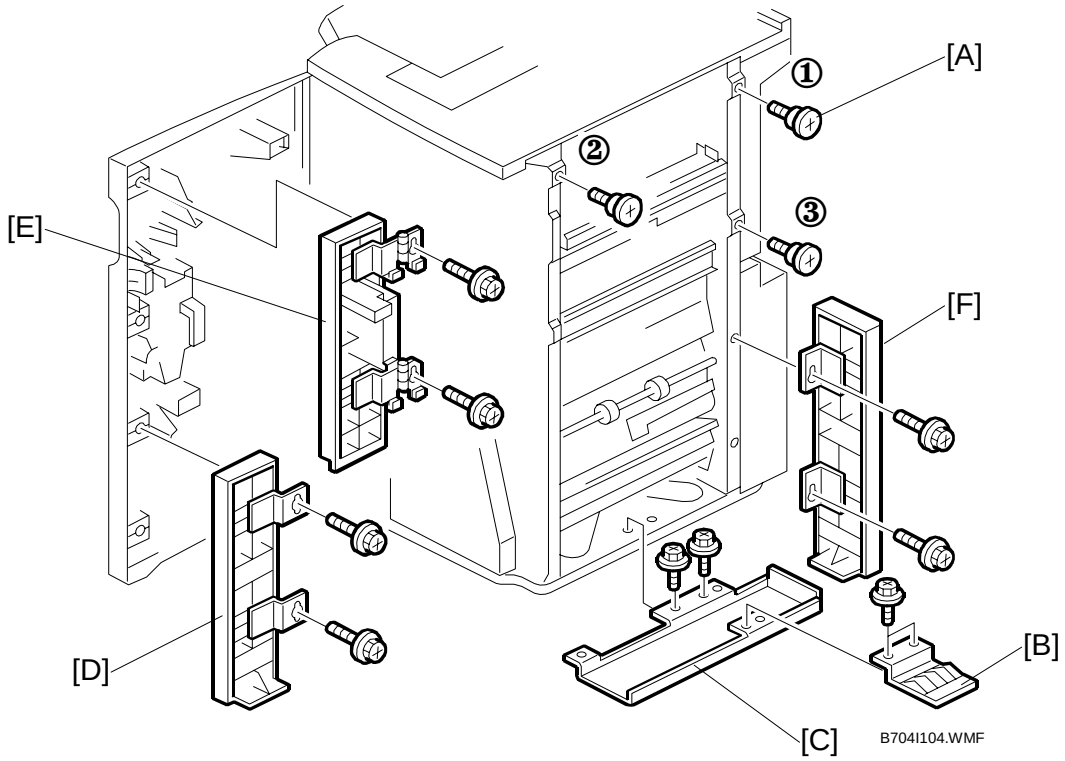

1. Attach the three shoulder screws [A] ①②③ (☞ x 3).
2. If the finisher has been previously installed, remove the ground plate [B] from the finisher and save the screws.
3. Attach the bottom plate [C] (☞ x 2, M3 x 6) then attach the ground plate to the bottom plate (☞ x 2).
4. Attach the bottom front cover extension [D] (☞ x 2, M4 x 8).
5. Attach the top front cover extension [E] (☞ x 2, M4 x 8).
6. Attach the rear cover extension [F] (☞ x 2, M3 x 6).

Downloaded from www.Manualslib.com manuals search engine

Attaching the Interposer Tray (B700/B701/B706)

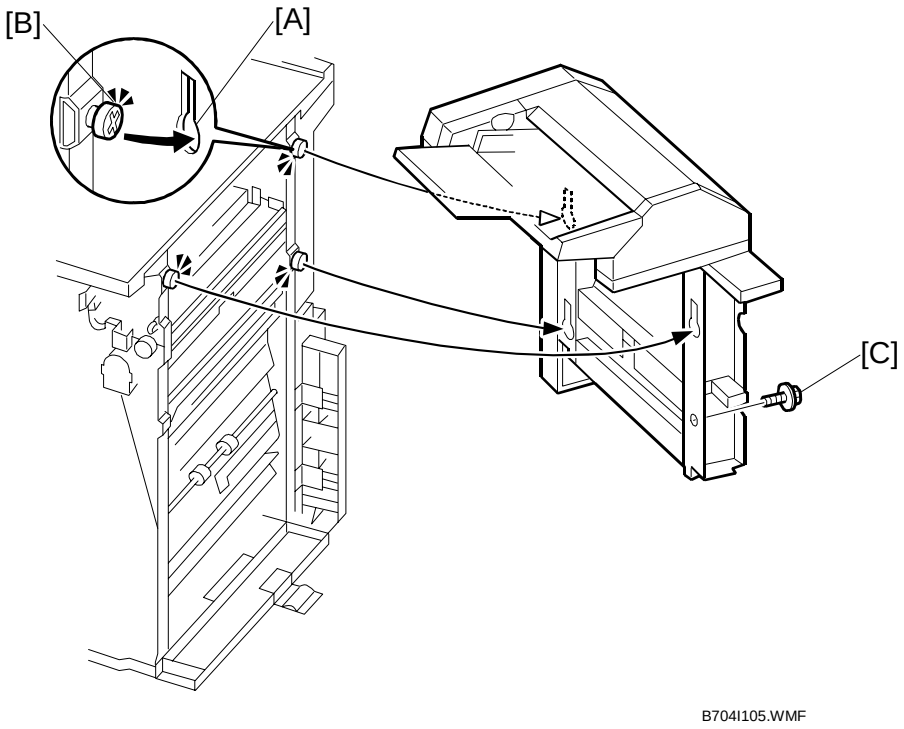

1. Pick up the cover interposer tray, align the keyholes [A] with the shoulder screws [B], then slide the cover interposer down onto the screws.
2. Secure the cover interposer with the screw [C] (x 1, M3 x 6).
3. If you are installing the cover interposer tray on the B700/B701, skip the next section and go directly to “Docking Finisher and Interposer” on page 1-11307.

   -or-

   If you will install the cover interposer tray on the B706, go to the next section, install the corner plates on the B706, then go to “Docking Finisher and Interposer” on page 1-11307.

Downloaded from www.Manualslib.com manuals search engine

Attaching the Corner Plates for the B706

Important:

- The corner plates are installed on the B706 only.

Right Rear Corner Plate (B706 only)

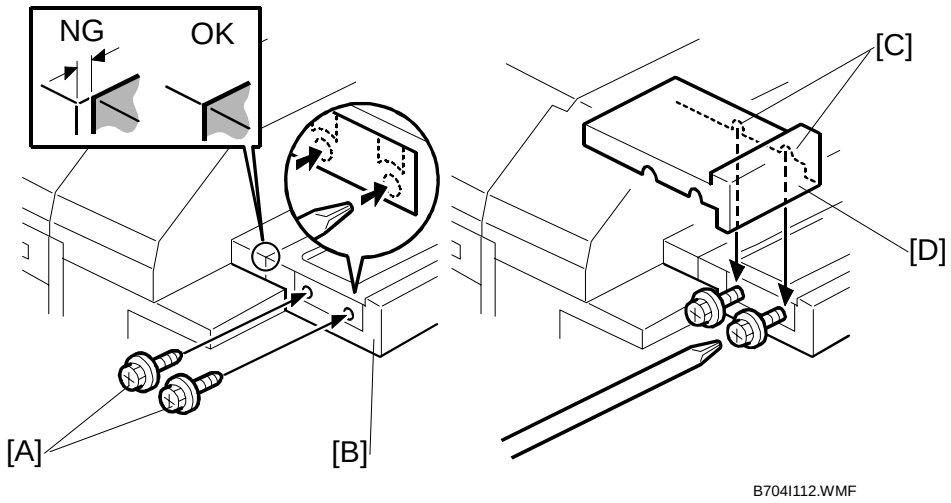

1. Temporarily attach the screws [A] (with about two turns) to the right end of the finisher extension table [B] (🔩 x 2, tapping M4 x 8)
   NOTE: The holes are not visible because they are covered with tape. Just punch the screws through the holes.
2. Align the cutouts [C] of the right rear corner plate [D] with the screws and attach the plate.
3. With a long screwdriver inserted through the cutouts in the right rear corner plate [D], tighten the screws to fasten the right rear corner plate to the table extension [B].

Downloaded from www.Manualslib.com manuals search engine

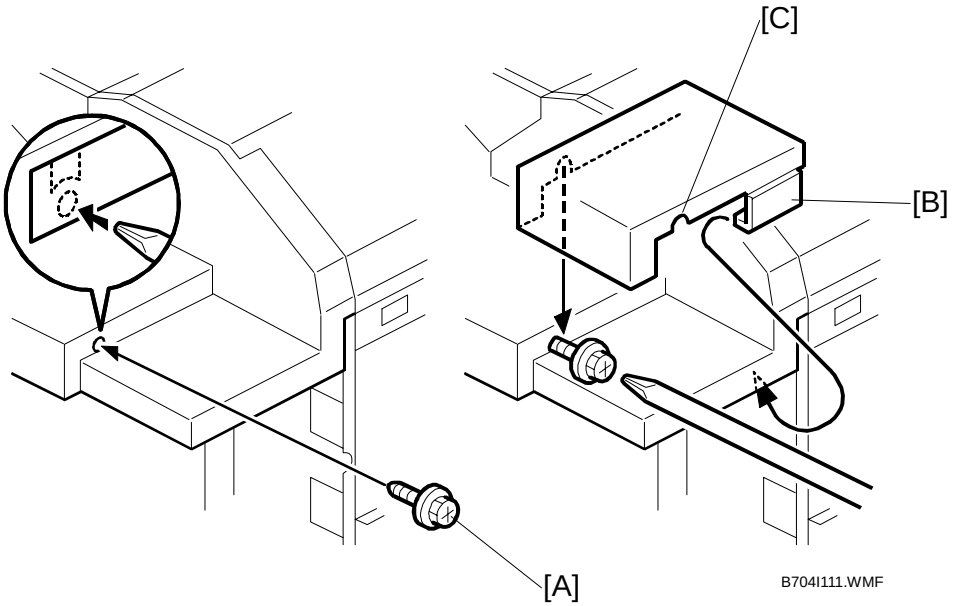

4. Temporarily attach the screw [A] (M4 x 8) with about two turns to fasten to the panel at the right front corner.
   NOTE: The hole is not invisible because it covered with tape. Just punch the screw through the hole.
5. With the clamp [B] under the edge of the corner, align the cutout [C] in the right front corner plate with the screw, then snap it into position.
6. With a long screwdriver insert into the plate cutout [C], and tighten the screw to fasten the right front corner plate.

Downloaded from www.Manualslib.com manuals search engine

Docking Finisher and Interposer to the Machine (B700/B701/B706)

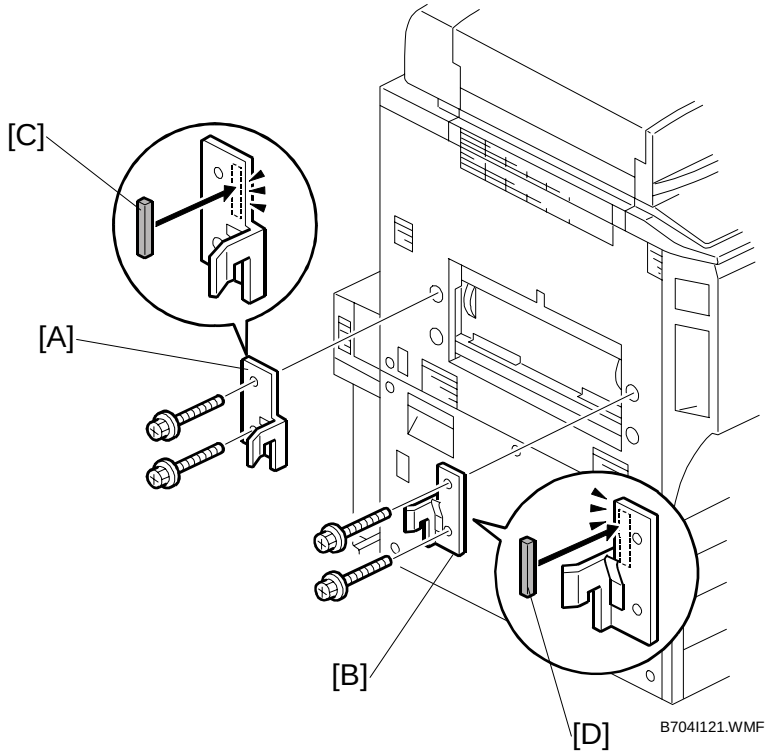

1. Attach the rear bracket [A] (☞ x 2, M4 x14).
2. Attach the front bracket [B] (☞ x 2, M4 x14).
3. Attach the gasket seals [C] and [D].

Downloaded from www.Manualslib.com manuals search engine

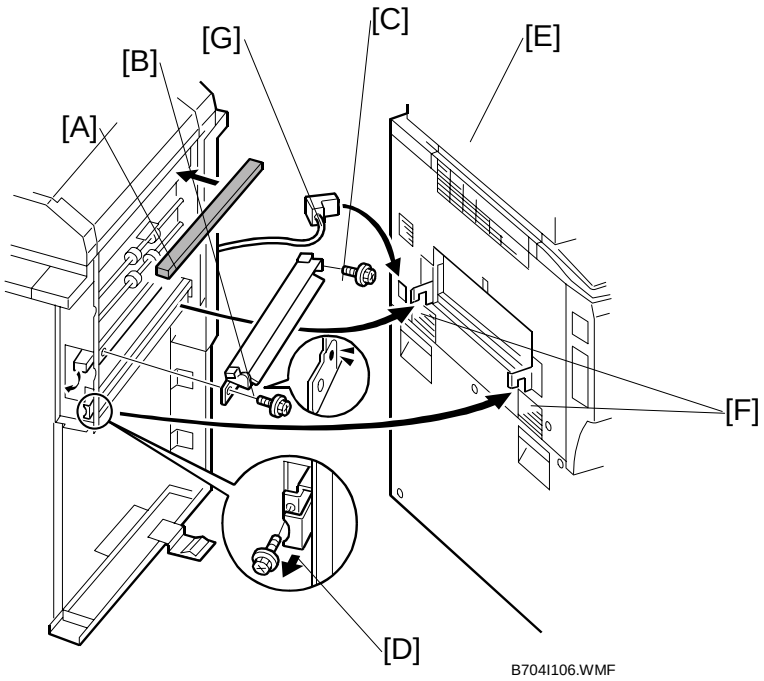

4. Attach the sponge strip [A] that is supplied with the finisher.
5. Attach the guide plate (removed from the finisher) to the cover interposer.
   - Attach the front end [B] of the plate (x 1).
   - Attach the rear end of the plate with the anti-static brush [C] (x 1).

   Important: Use the two small tapping screws that are supplied, and not the machine screws removed from the finisher guide plate.
6. Release the lock lever [D] (x 1).
7. Attach the pad [E]. (This pad is provided with the finisher.)
8. Slowly push the finisher against the side of the machine until the brackets [F] go into the slots.

   ⚠WARNING!
   Move the finisher carefully, or you will bend the entrance guide plates.
9. Attach the lock lever [D] (x 1).
10. Connect the connector [G] to the copier.

Important! Check the duct ❶ on the left side of the machine. Make sure that the sponge does not prevent air flow through this duct.

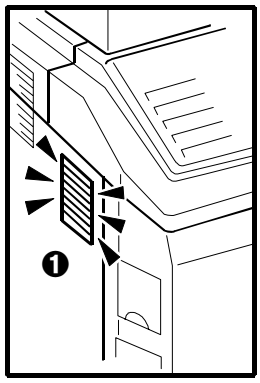

Downloaded from www.Manualslib.com manuals search engine

1.15 MFP CONTROLLER OPTIONS

1.15.1 OVERVIEW

The machine controller box has five board slots and 3 SD cards. Make sure that each board and SD card is put in the correct slot. For more, please see the decal on the controller box.

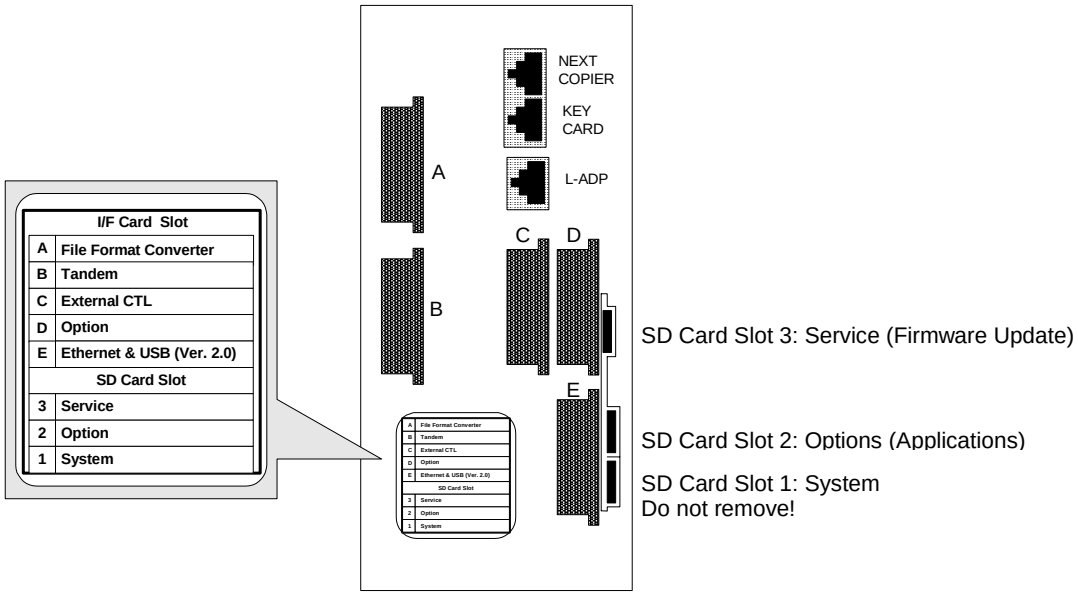

B132I907.WMF

Board Slots

A	Not used
B	Copy Connector Type 3260 (B328)
C	EFI Printer Controller E-7000 (G815)
D	Not used
E	Not used

SD Card Slots

3	Version updates, moving applications to other SD Cards.
2	Applications (1 or several applications combined on 1 SD Card).
1	System Controller SD Card. Never remove!

Important!

- Only one SD Card slot (Slot 2) is available for applications. To install more than one application, they must be copied on the same SD Card. (☛1.15.5)

Downloaded from www.Manualslib.com manuals search engine

1.15.2 ACCESSORY CARDS

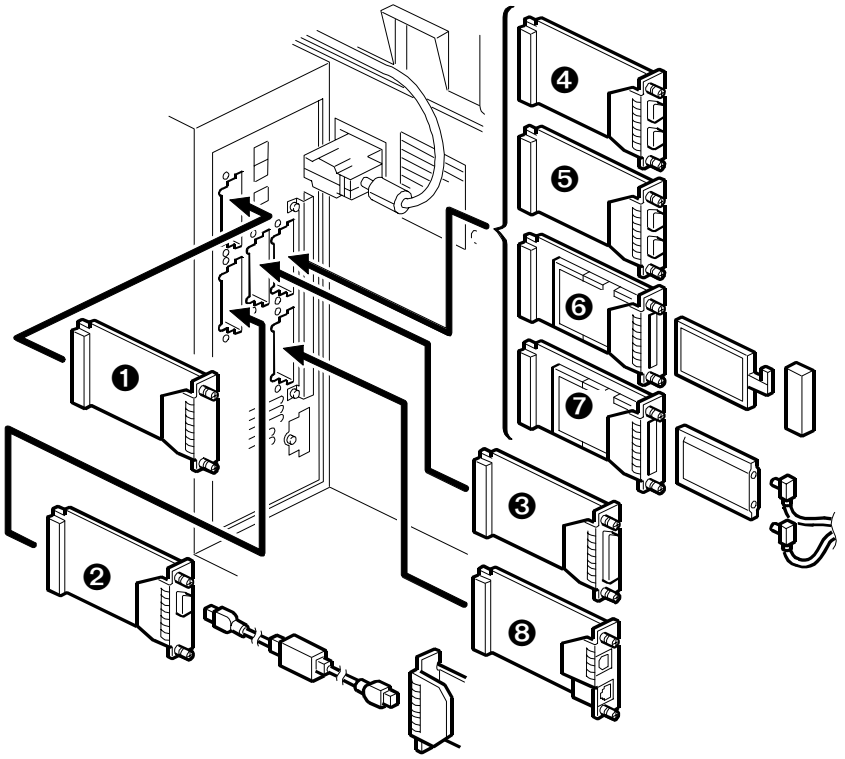

B737I102.WMF

No.	Code	Name	Slot	Page
❶	-	Not use	A	
❷	B328	Copy Connector Type 3260	B	1-132
❸	EFI-V G815	EFI Printer Controller (E-7000)	C	1-134
❹	-	Not use	D	
❺	-	Not use	D	
❻	-	Not use	D	
❼	-	Not use	D	
❽	-	Printer/Scanner unit GM-2100	E	1-123

Note: Items ❹, ❺, ❻, ❼, must be in the same slot. Because of this, only one of these cards can be installed at the same time.

Downloaded from www.Manualslib.com manuals search engine

1.15.3 APPLICATIONS PROVIDED ON SD CARDS

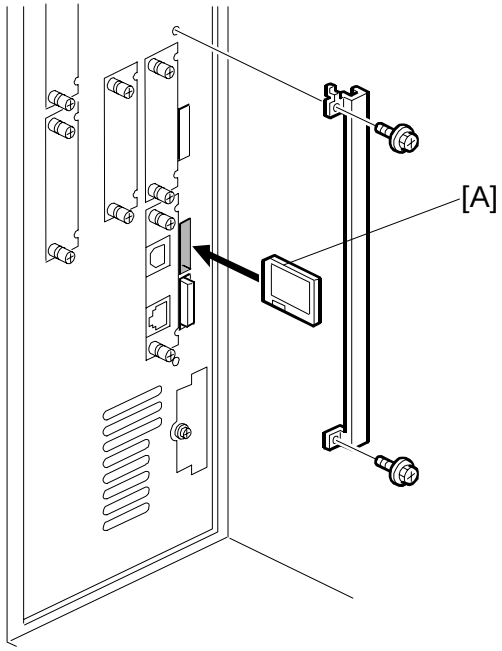

B132I909.WMF

These applications are available on SD cards [A]. You install them in Slot 2:

- Printer/Scanner Unit GM-2100
- PostScript3 Unit Type 3260 (B761)
- Data Overwrite Security Unit Type C (B735)

Slot 2 is the only slot available for these application SD cards.

If the customer must use more than one application, then the applications must be put together on one SD card. (☛1.15.5)

Important

- Slot 1 (the lower slot) is for the system SD card only. The system SD card must not be removed. The machine will show SC732 if a different SC card is put in Slot 1.
- Slot 2 holds the application SD card. It also holds the target SD card when applications are put together on one card.
- Slot 3 (the top slot) is used to update the machine firmware. It also holds the source SD card when applications are put together on one card.

Downloaded from www.Manualslib.com manuals search engine

1.15.4 HANDLING DIMMS AND SD CARDS

⚠WARNING!
Always turn the machine off and disconnect the machine power cord before you install a controller option.

Important!

- To prevent damage to the controller box, always do your work carefully. Do not put your hand or a tool into the box when you remove the controller box or install an option.
- To prevent damage to the circuits on the boards, always touch a metal surface to remove static charge from your hands before you touch electronic components.

DIMMs

1. Hold the ROM DIMM. The edge connector [A] must point toward the slot and the notch [B] in the DIMM must be in the top right corner.
2. Put the edge connector [C] in the slot at a 30-degree angle from the surface of the board. If the angle is too low, the upper contact could bend.
3. Carefully move the outer edge of the ROM DIMM up and down slightly until it goes into the connector. Then carefully push it down level with the controller board.

   Important: If the upper contact is pushed in with force, and becomes bent, the connection will be defective, and the machine could stop.

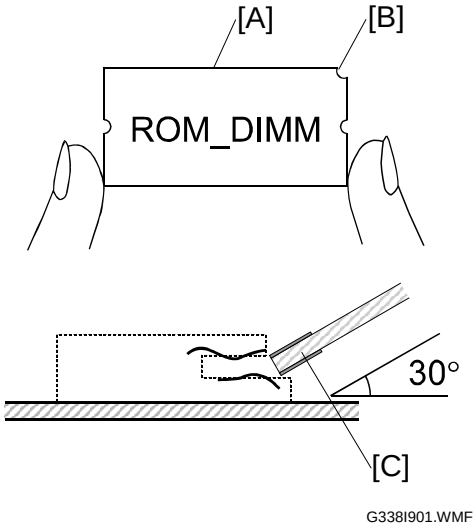

G338I901.WMF

SD cards

To install and remove an SD Card:

SD cards are held in position by a small spring-lock mechanism.

1. To install an SD card, push it into the slot until it stops, then release it.
2. To remove an SD card, push the SD card in carefully to release it, and then remove it from the slot.

   Important: To prevent damage to the SD card or the slot lock, always push the card in, to release it, before you try to remove it.

Downloaded from www.Manualslib.com manuals search engine

1.15.5 MERGING APPLICATIONS ON ONE SD CARD

Overview

Only one SD card slot is available for SD card applications.

The machine has three SD card slots. Slot 1 is used for the system card. Slot 2 is used for application programs, and Slot 3 is used for servicing only.

If the customer wants to use more than one application SD card, the applications must be put together on the same SD card.

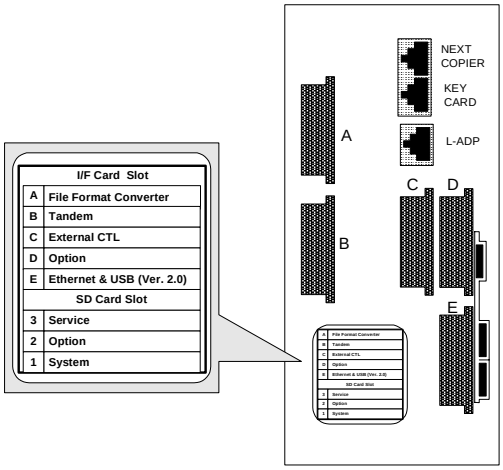

B132I907.WMF

Important

- The data necessary for authentication is transferred with the application program to the target SD card.
- Do not use an SD card if it was used with a computer before this time. Correct operation is not guaranteed if this type of SD card is used.
- The SD card is the only evidence that the customer is licensed to use the application program. The service engineer may occasionally need to check the SD card and its data to solve problems. SD cards must be stored in the cover on the door of the copier. (☛Pg.1-116)
- A licensing agreement prohibits copying of the PostScript SD card. However, you can copy an application from another SD card to the PS SD card.
- If an SD card was used to combine applications on that card, that SD card cannot be used for a different function.
- **NEVER REMOVE THE SYSTEM SD CARD FROM SLOT 1.**

Downloaded from www.Manualslib.com manuals search engine

Merging Applications

Do this procedure to put more than one application on one SD card.

1. Turn off the copier.
2. Remove the SD card slot cover (☞ x2).
3. Put the Source SD card in **Slot 3** (top slot). This card contains the application that you want to copy.
   NOTE: The PS SD card cannot be the source card, because it cannot be copied.
4. Put the Target SD card in **Slot 2** (middle slot). The application on the card in **Slot 3** will be copied to this card.
5. Open the front door.
6. Turn the copier on.
7. Go into the SP mode and select **SP5873 001**.
8. Press "Execute".
9. Read the instructions on the display and press "Execute" to start copying.
10. When the display tells you copying is completed, touch "Exit".
11. Turn the copier off.
12. Remove the Source SD card from **Slot 3**. Keep the target SD card in Slot 2.
13. Turn the copier on.
14. Go into the User Tools mode and check that all the applications on the SD card in Slot 2 are enabled:
    User Tools> System Settings> Administrator Tools> Firmware Version> Next (5/5)
15. Turn the copier off again, then:
    - Attach the SD card slot cover.
    - Attach the rear cover of the machine.
    - Remove the cover from the front door, and store the SD card that was copied. (☛Pg.1-1226)

Important!

- After an SD card is copied, it cannot be used. But it must be stored in the front door, to serve as proof of purchase by the customer.
- The original card can also be used to perform an undo procedure (SP 5873 002). Before you put the card in the front cover, label it carefully so that you can identify it easily if you need to do the undo procedure (see the next page).

Downloaded from www.Manualslib.com manuals search engine

Undo Exec

1. Turn the main switch off.
2. Put the SD card with the merged applications in SD Card **Slot 2**.
3. Put the original destination SD card (the one stored in the front door) into **Slot 3**.
   NOTE: The SD card in **Slot 3** must be the original SD card of the application you want to move from **Slot 2** to **Slot 3**. You cannot use any blank SD card in **Slot 3**.
4. Turn the main switch on.
5. Go into the SP mode and do **SP5873-002** (Undo Exec)
6. Follow the messages on the operation panel to complete the procedure.
7. Turn the main switch off.
8. Remove the SD cards from the slots.
9. Turn the main switch on.

Downloaded from www.Manualslib.com manuals search engine

Storing SD Application Cards on Site

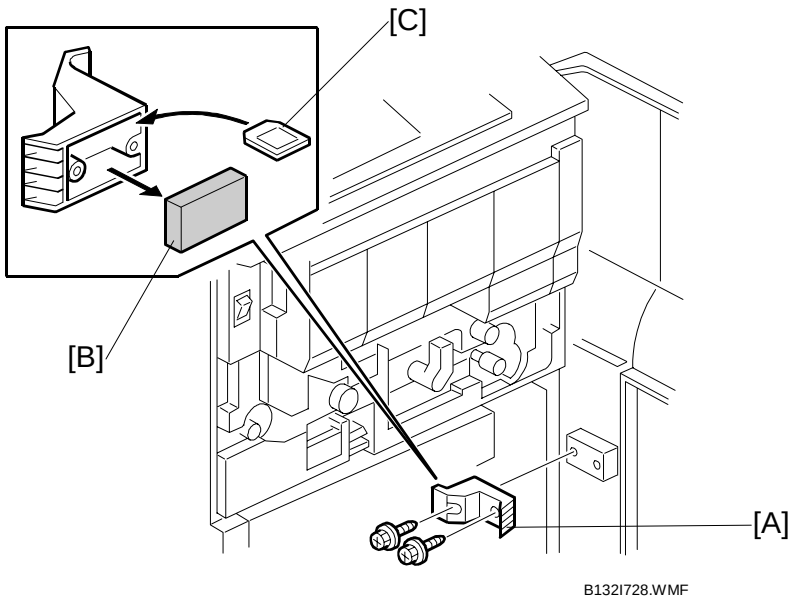

1. Open the front door.
2. Remove the cover [A] on the door (☞ x2).
3. Remove the block [B].
4. Store the SD cards [C] inside the cover.
5. Attach the cover to the machine.

Downloaded from www.Manualslib.com manuals search engine

1.15.6 PRINTER/SCANNER UNIT GM-2100 (B737)

Accessories

Check the accessories and their quantities against this list.

Description	Qty
1. Scanner/Printer DIMM	1
2. NIB (Network Interface Board)	1
3. Printer/Scanner SD card	1
4. Screws - M3x8	2
5. Ferrite Core	1
6. Key Top Assembly	1
7. Operating Instructions – Printer	1
8. Installation Instructions	1
9. FCC Label	1
10. Software CD-ROM	3

Downloaded from www.Manualslib.com manuals search engine

Installation

⚠WARNING!

Turn the machine off and disconnect the machine power cord before you start this procedure.

NOTE: For the printer/scanner unit, the machine must have a minimum of 128 MB of memory (more is recommended). Memory chips are not supplied with this option.

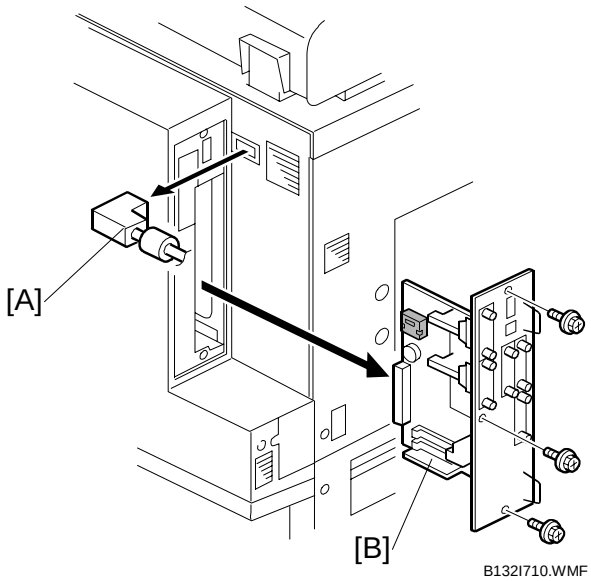

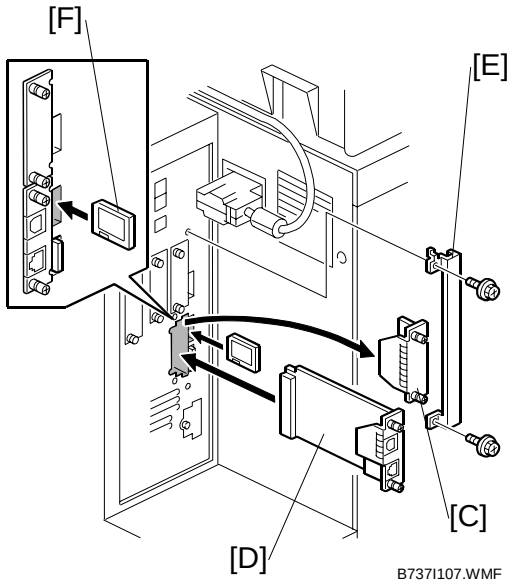

1. Disconnect the ARDF cable [A] (☞ x1).
2. Remove the controller board [B] (☞ x3).
3. Connect the Scanner/Printer DIMM (128 MB expansion memory) into RAM slot CN501 on the controller board.
4. Attach the controller board (☞ x3).
5. Remove the **I/F Slot Cover E** [C] (☞ x2).
6. Install the NIB [D] (NIC/USB) in Slot E.
7. Remove the SD card slot cover [E] (☞ x2)
8. Install the Printer/Scanner SD card [F] in **SD Card Slot 2 (middle slot).**
9. Attach the SD card slot cover (☞ x2).

Downloaded from www.Manualslib.com manuals search engine

10. Wind the Ethernet cable [A] around the ferrite core [B] as shown.
11. Make sure there is a minimum of 150 mm (6 in.) between the ferrite core and the end of the cable.
12. Close the ferrite core.
13. Connect the RJ45 plug [C] on the Ethernet cable to the NIB.

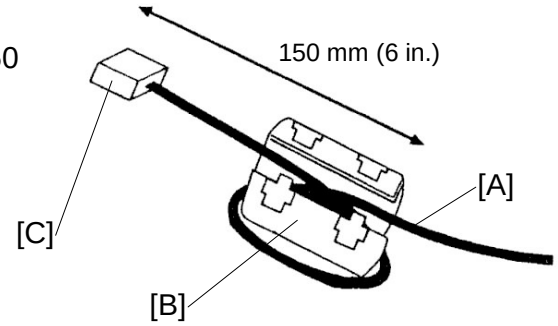

B737I900.WMF

14. Replace the old key top assembly [D] with the new key tops [E].
15. Do the procedures in the operating instructions to make the user settings (for example, the IP address).

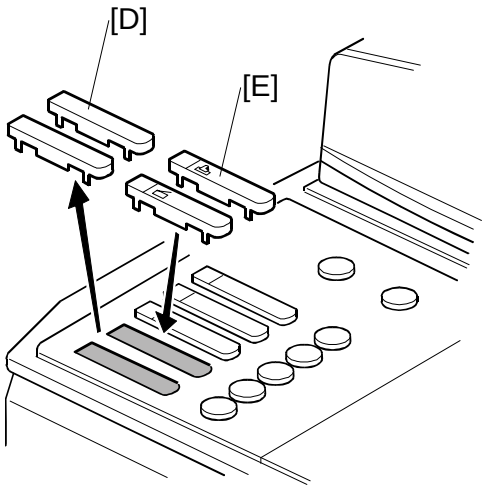

B737I115.WMF

16. Do the color calibration for the printer:

    User Tools> Maintenance> Auto Color Calibration> Printer Function:

    Do all three test patterns.

Downloaded from www.Manualslib.com manuals search engine

USB SP Settings

The following SP commands are available. But, only one setting can be adjusted, and this must only be done if the customer has USB data transmission errors.

NOTE: Do not change the settings marked “DFU”. These settings are for design and factory use only.

To go into the SP mode:

1. Press ‘Clear Modes’
2. On the operation panel keypad, input **107**.
3. Hold down [Clear/Stop] ( ) for more than 3 seconds.
4. Press “Copy SP” on the touch-panel to open the SP command selection screen.

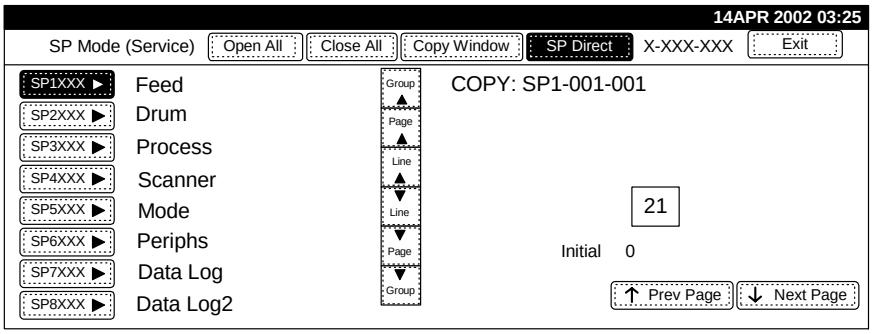

B064I999.WMF

5. Input **5844**.

SP No.	Name	Function	
5844 001	Transfer Rate	Adjusts the USB transfer rate. Do not change the setting unless there is a data transfer error with the USB high speed mode.	
		HS/FS:	High speed/Full speed auto adjust (480Mbps/12Mbps)
		FS:	Full speed (12Mbps fixed)
5844 002	Vendor ID	Displays the vendor ID. **DFU**	
5844 003	Product ID	Displays the product ID. **DFU**	
5844 004	Dev. Release Num	Displays the development release version number. **DFU**	

Downloaded from www.Manualslib.com manuals search engine

1.15.7 POSTSCRIPT3 UNIT TYPE 3260 (B761)

Accessory Check

Check the accessories and their quantities against this list:

Description	Q'ty
1. SD Card	1

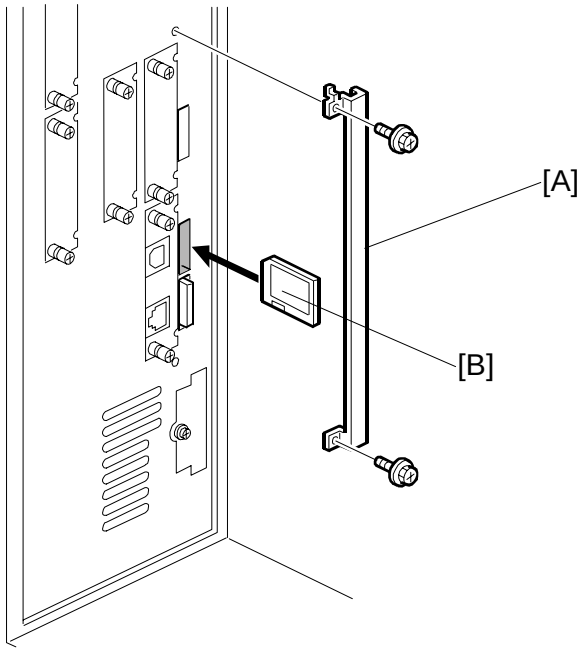

B132I909.WMF

1. Remove the slot cover [A].
2. Put the PostScript3 SD card [B] in SD card slot 2 (middle slot).

Important

- Only one SD card slot is available for applications.
- If the customer wants to use one more application that must go in slot 2 (Printer/Scanner B737, for example), you must copy the contents of the printer/scanner SD card to the PostScript3 SD card. (☛1.15.5)
- The scanner/printer application must be copied to the PostScript3 SD card, because the PostScript3 SD card cannot be copied for copyright reasons.
- After you copy the printer/scanner SD card, store it behind the door. (☛Pg.1-1226) The application SD cards are the property of the customer and should remain at the site.

Downloaded from www.Manualslib.com manuals search engine

1.15.8 DATAOVERWRITESECURITY UNIT TYPE C (B735)

Accessory Check

Check the accessories and their quantities against this list:

Description	Q'ty
2. SD Card	1

Before You Begin…

You must copy the DataOverwriteSecurity card to another application SD card. The original SD card, with the DataOverwriteSecurity application only, cannot be used.

For example, you can copy the contents of the printer/scanner SD card to the Data Overwrite Security Unit (B735) SD card. (☛1.15.5).

Also, the DataOverwriteSecurity card application can be copied to the scanner/printer card.

After you copy the printer/scanner SD card or DataOverwriteSecurity card, store it behind the door.
(☛Pg.1-1226). The application SD cards are the property of the customer and should remain at the site.

Downloaded from www.Manualslib.com manuals search engine

Seal Check And Removal

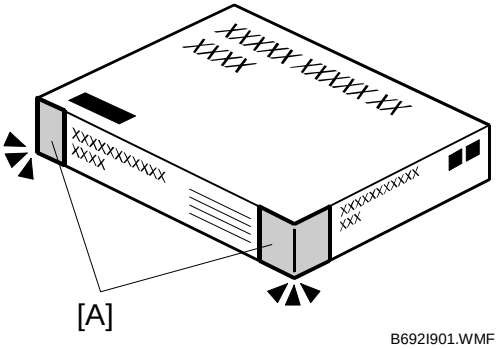

B692I901.WMF

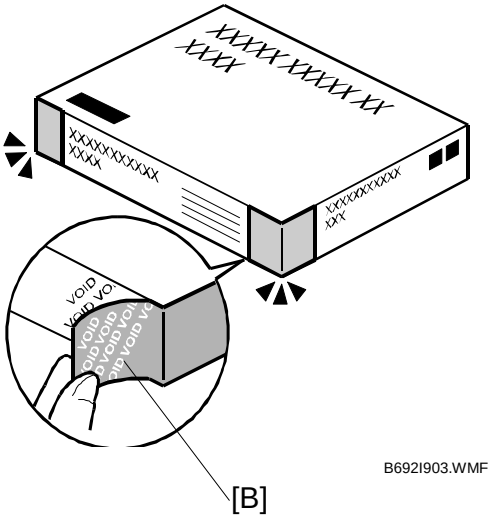

B692I903.WMF

⚠CAUTION

Before you start the installation, you must check the box seals to make sure that they were not removed after the items were sealed in the box at the factory.

1. Check the box seals [A] on each corner of the box.
   - Make sure that a tape is attached to each corner.
   - The surfaces of the tapes must be blank. If you see “VOID” on the tapes, do not install the components in the box.
2. If the surfaces of the tapes do not show “VOID”, remove them from the corners of the box.
3. When you remove each seal, the “VOID” marks [B] can be seen. In this condition, they cannot be attached to the box again.
4. Copy the DataOverwriteSecurity card to another application’s SD card (for example, the printer/scanner or PostScript card).
5. After you copy the DOS card, store it behind the door. Use the combined DataOverwriteSecurity / other application SD card for the next part of the installation procedure.

Downloaded from www.Manualslib.com manuals search engine

Installation Procedure

⚠CAUTION
The machine should always be turned off and its power cord disconnected before you do this procedure.

1. If the machine is on, turn off the main power switch.
2. Disconnect the network cable (if the machine is connected to a network).
3. Remove the slot cover [A] (x 2).
4. Install the SD Card [B] into slot 2, then attach the slot cover.
5. Connect the network cable (if the machine is connected to a network).
6. Turn the main power switch on.

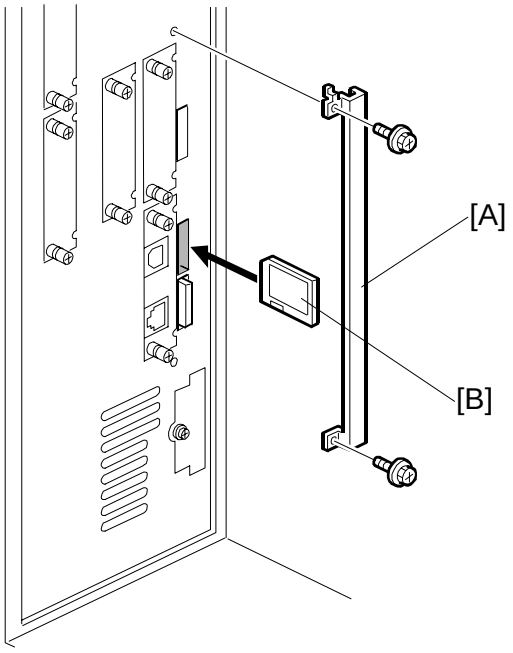

B132I909.WMF

Downloaded from www.Manualslib.com manuals search engine

7. Enter the SP mode and do **SP5878**.
8. Go out of the SP mode, turn the operation switch off, then turn the main power switch off.
9. Turn the machine power on.
10. Enter the User Tools mode, and select System Settings> Administrator> Auto Erase Memory Setting> On.
11. Go out of the User Tools mode.

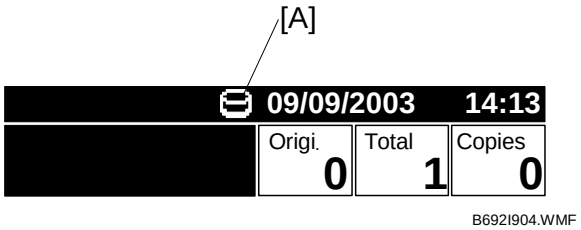

B692I904.WMF

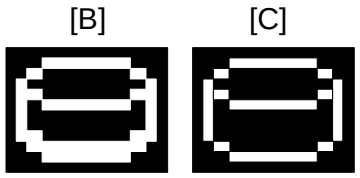

B692I905.WMF

12. Check the display and make sure that the overwrite erase icon [A] is displayed.
13. Make a Sample Copy.
14. Check the overwrite erase icon.
    - The bottom of the icon becomes thicker [B].
    - “Next Copy” is shown for a short interval below the icon.
    - The icon goes back to its usual shape [C].
15. Remove the Document Server and Scanner key-tops, and replace them with the blank key-tops that are supplied with the kit.

Downloaded from www.Manualslib.com manuals search engine

1.15.9 COPY CONNECTOR TYPE 3260 (B328)

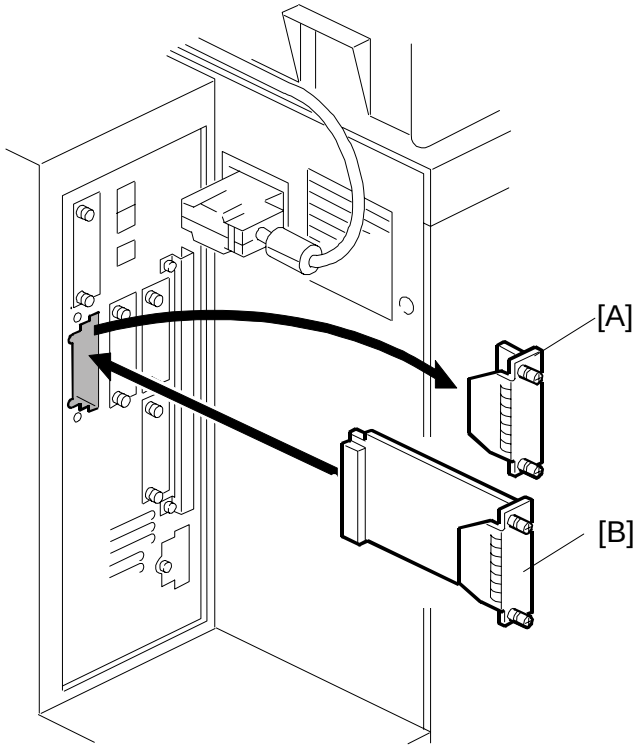

1. Turn the machine off and unplug the machine before starting the following procedure.
2. Remove the cover [A] of **Slot B** (☞ x 2).
3. Install the Copy Connector Board B328 [B] in **Slot B** and attach it with the screws.
4. Remove the rear upper cover. (☛See 3.3.6)

Downloaded from www.Manualslib.com manuals search engine

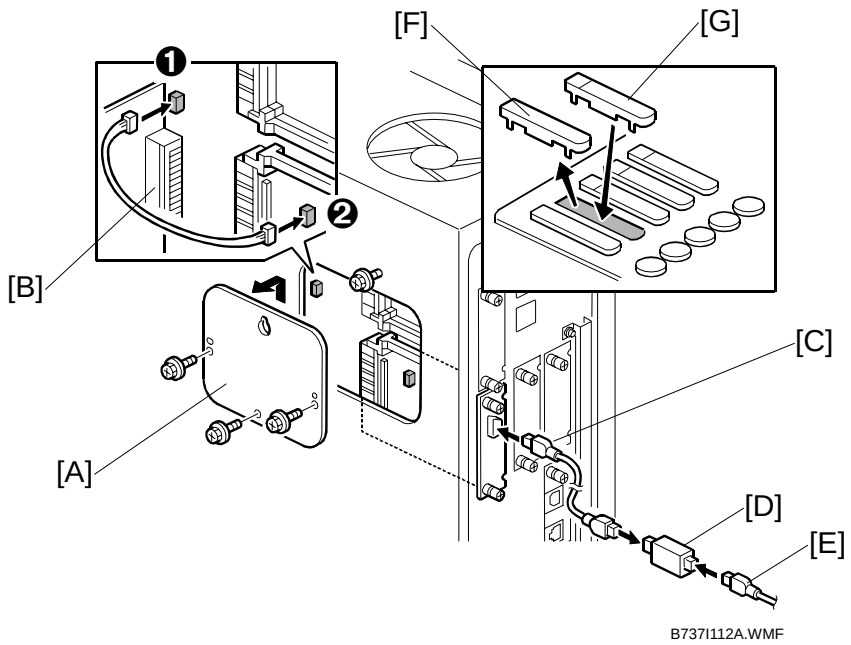

5. Remove the controller box cover [C] (🔩 x3).
6. Connect the power repeater cable [B] to:
   ❶ CN594
   ❷ CN4
7. Reattach the controller box cover and rear upper cover.
8. Repeat Steps 1 to 7 to install the connection kit on the second machine.
9. Insert the end of the interface cable [C] to the connection PCB.
10. If additional cable is required, connect the cables [E] with repeater hubs [D].
11. On the operation panel of each machine, remove the second cover [F] from the bottom ("Printer").
12. Install the appropriate key on each machine.

    Attach the "Printer/Other Function" key [G] (or its equivalent symbol for EU) if the printer/scanner option is installed.

    -or-

    Attach the "Other Function" key [G] (or its equivalent symbol for EU) if the printer/scanner option is not installed.
13. Attach the other end of the connection cable to the connection PCB installed in the other machine.

Downloaded from www.Manualslib.com manuals search engine

1.15.10 EFI PRINTER CONTROLLER (G815)

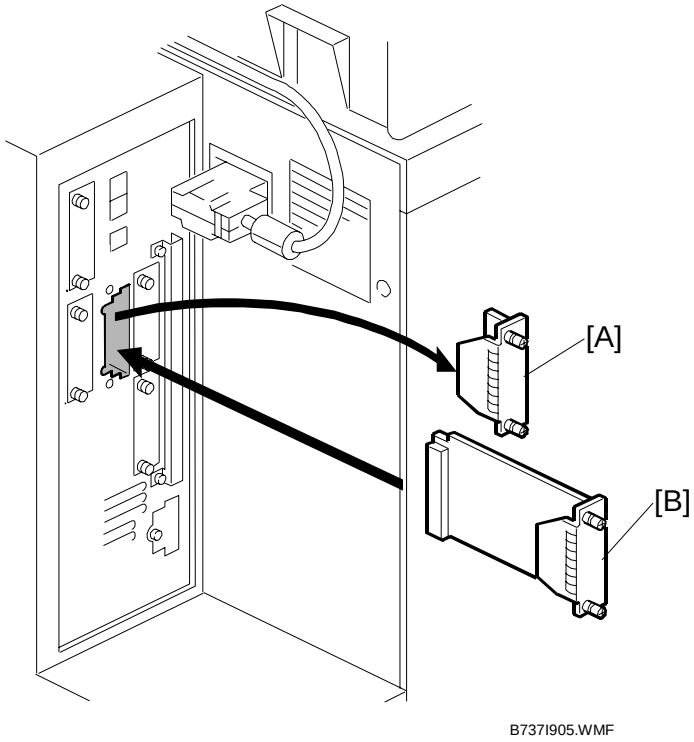

1. Turn the machine off.
2. Remove the cover [A] of **Slot C** (🔩 x 2).
3. Install the EFI Printer Controller (G815) board [B] in **Slot C** and attach it with the screws.

Downloaded from www.Manualslib.com manuals search engine

2. PREVENTIVE MAINTENANCE

2.1 OVERVIEW

The amounts mentioned (K=1,000) as the PM interval indicate the number of prints or copies unless stated otherwise. These numbers are based on the PM counter.

Required Materials

Item	No.
Optical Cloth	A0129111
Alcohol	---
Exposure Glass Cleaner	A1939310
Lubricant Powder	B1329700

Important

- The Lubricant Powder (B1329700) (composed of Zinc Stearate) is specially designed for this machine (e-STUDIO4500c/5500c). If this lubricant powder is not available, please use this machine's yellow toner.
- Always use this lubricant powder to lubricate the drum and ITB during servicing.
- Never use the previous Setting Powder (54429101) in any service procedure for the e-STUDIO4500c/5500c. The composition of this Setting Powder and the Lubricant Powder is completely different.
- If you use Setting Powder (5442910) to service this machine, you will damage the drum charge roller and cause problems with image quality.

⚠WARNING

Turn off the main power switch and unplug the machine before performing any procedure in this section. Laser beams can seriously damage the eyes.

Important!

- **DO THE FORCED MUSIC ADJUSTMENT WITH SP 2111 001 (☛ 3.19.4).**

Downloaded from www.Manualslib.com manuals search engine

2.2 PM COUNTER

The PM Counter main menu and submenu allows you to review the PM counts for both units and individual components.

2.2.1 DISPLAYING THE PM COUNTER

1. Press [Clear Modes] (⊡)> "**107"**> [Clear/Stop] (C/⊘).

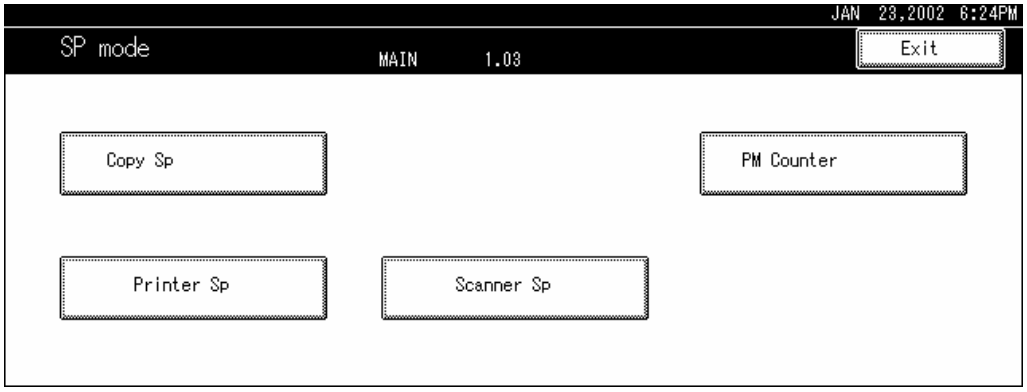

B132P901.BMP

2. Press [PM Counter].

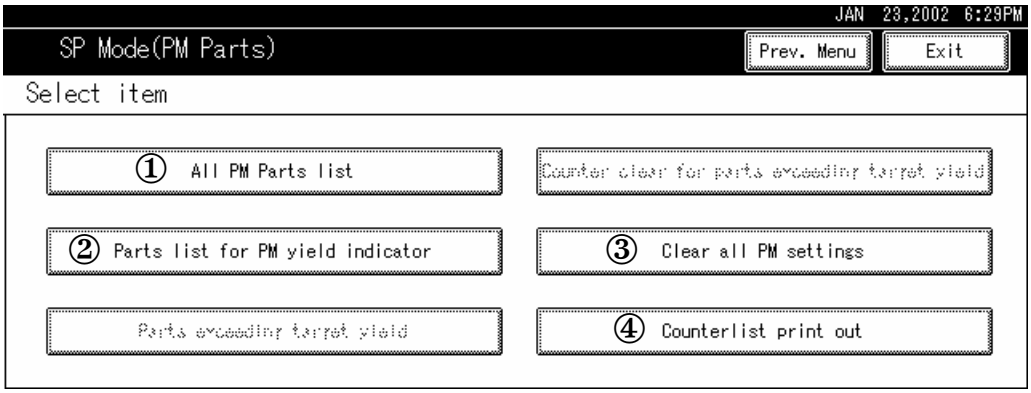

B132P902.BMP

① **All PM Parts List**. Displays all PM items (all PM items, not only PM units). Lists all PM items regardless of PM yield indicator settings. (☛Pg.2-4)

② **Parts list for PM yield indicator**. Displays on the items with their PM yield indicator settings set to "Yes". (☛Pg.2-4)

③ **Clear all PM settings**. Resets all PM counter settings to "0" at the same time. PM items can be reset one by one with the [Clear] button. (☛Pg.2-4)

④ **Counter list print out**. Prints the PM counter on paper.

Downloaded from www.Manualslib.com manuals search engine

2.2.2 PM PARTS SCREEN DETAILS

All PM Parts list: Main Menu

The "All PM Parts list" displays all PM units and individual items. This list shows all PM items, regardless of their "PM yield indicator settings". (☛Pg.2-4)

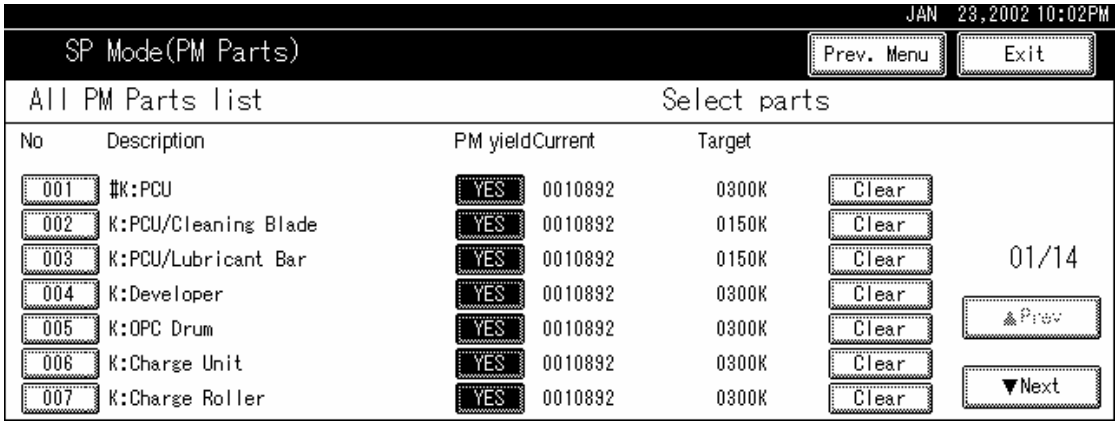

[A]: Number buttons. Pressing a number button opens a submenu. (☛Pg.2-4)
[B]: Descriptions. The # mark denotes a "unit" (not individual item).
[C]: PM yield buttons. Function is the same as the "PM yield indicator settings" button. (☛Pg.2-4).
[D]: Current PM counter value.
[E]: Target PM interval. This can be changed by pressing a number button [A].
[F]: PM counter clear button. Function is the same as the [Clear current counter] button.

Downloaded from www.Manualslib.com manuals search engine

Number button submenu

Press any number button to open the submenu for a part. In the example below, the number button [001] #K:PCU was pressed.

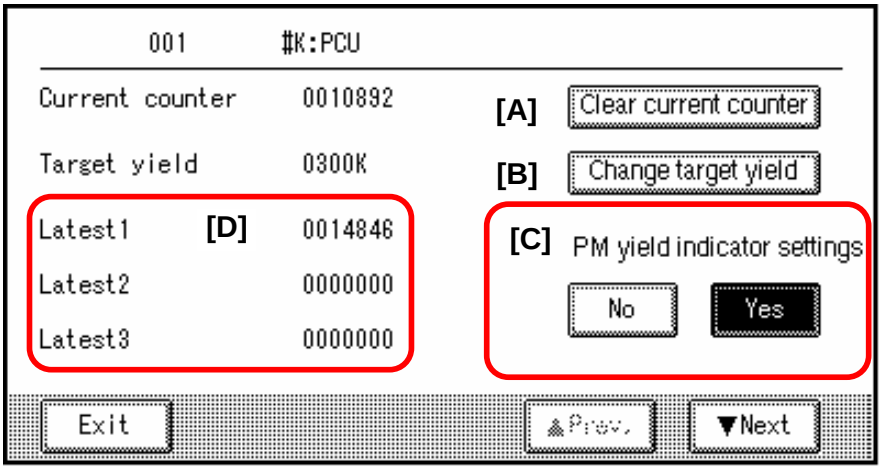

B132P904.BMP

[A]: **Clear current counter**. Press to reset the selected PM counter (in this example 001 #K:PCU) to "0". You can also clear the settings by pressing the [Clear] button on the right side of the PM Counter Main Menu ([F] on the previous page).

[B]: **Change target yield**. Press the change the target PM yield. To change the setting:

- Press [Change target yield]
- Enter the number for the new target with the 10-key pad.
- Press [#] on the operation panel.

[C]: **PM yield indicator settings**. [Yes] is the default. Press [No] to remove the current item from the "Parts list for PM yield indicator".

- When set to "Yes", items marked with the # mark (# = a unit) will not have their individual items displayed automatically in the "Parts list for PM yield indicator list".
- When set to "No", items marked with the # mark (# = a unit) only the individual components will appear in the list (the units will not appear).

[D]: **PM counter history**. This is a summary of the most recent counts

- Latest 1. The latest PM count since the unit (or part) was replaced.
- Latest 2. The previous PM count since the unit (or part) was replaced.
- Latest 3. The previous but one PM count since the unit (or part) was replaced.

Downloaded from www.Manualslib.com manuals search engine

Parts list for PM yield indicator

This list shows the PM Parts Main Menu with only items set to "Yes" displayed.

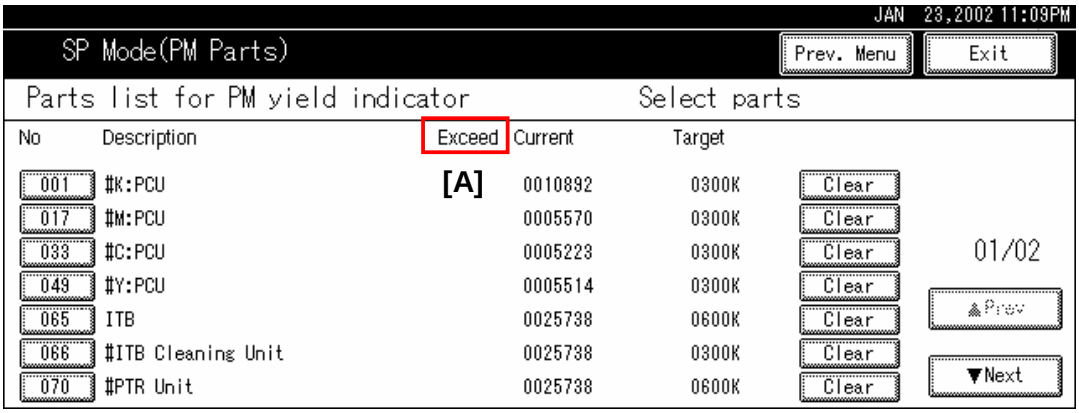

B132P905.BMP

Note the following:

- The # mark denotes a unit.
- Items without the # (065 ITB) denote individual components.
- An asterisk ❇ will appear in the Exceed column [A] to show items that that have exceeded their target PM yields.

Downloaded from www.Manualslib.com manuals search engine

2.3 PM TABLES

2.3.1 MAIN MACHINE

Symbol Key for PM Tables

I: Inspect. Clean, replace, or lubricate as needed.
C: Cleaning required.
R: Replacement required.
L: Lubrication required.
Silicone Grease 501 (52039502)
Grease Barrierta – S552R (A2579300)
Grease – KS660 – SHIN-ETSU (G0049668)
Heat Resisting Grease MT-78 (54479078)
Launa Oil 40 (54429103)
EM: Emergency Maintenance

Copier PM Parts

	150K	300K	600K	EM	Note
OPTICS					
Reflector		C			Optical cloth
1st Mirror		C			Optical cloth
2nd Mirror		C			Optical cloth
3rd Mirror		C			Optical cloth
Scanner Rails		C			Alcohol then dry cloth
Exposure Glass		C			Exposure glass cleaner
Toner Shield Glass		C			Optical cloth
APS Sensor		C			Dry cloth
ARDF Exposure Glass		C			Exposure glass cleaner
Dust Filters		C			Blow brush

Downloaded from www.Manualslib.com manuals search engine

	150K	300K	600K	EM	Note
PCU					
Charge Roller Unit	R				
Drum Cleaning Blade	R				
Lubricant Bar	R				
Lubricant Brush		R			PCU Cleaning Unit (☛3.5.5)
Toner Brush		R			PCU Cleaning Unit (☛3.5.5)
PCU Joint		R			PCU Cleaning Unit (☛3.5.5)
Quenching LED	C	C	C		
Potential Sensor	C	C	C		Blower brush. **Note**: Never use a vacuum cleaner around this sensor.
Developer K		R			
Developer Y, M, C	R				
Development Roller Gear			C		Service Life: 1200K Blower brush
Development Roller Idle Gear			R		Service Life: 600K Blower brush (☛3.5.2)
Development Unit			C		Service Life: 3000K Blower brush, dry cloth

	150K	300K	600K	EM	Note
TONER SUPPLY					
Toner Supply Unit		C			Blower brush, dry cloth

	150K	300K	600K	EM	Note
TRANSFER UNIT					
ITB			R		
ITB Internal Rollers			C		Dry cloth
ITB Encoder Sensor		C			Alcohol then dry cloth
ID and MUSIC Sensors		C			Alcohol then dry cloth
ITB Cleaning Roller		R			
ITB Cleaning Scraper Blade		R			
ITB Cleaning Blade		R			

	150K	300K	600K	EM	Note
PTR UNIT					
Paper Transfer Cleaning Blade	R				
PTR Cleaning Brush Roller		R			
Paper Transfer Lubricant Bar		R			
Paper Transfer Discharge Plate		R			
PTR (Paper Transfer Roller)	R				

Downloaded from www.Manualslib.com manuals search engine

	150K	300K	600K	EM	Note
FUSING UNIT					
Fusing Belt			R		
Hot Roller			R		
Pressure Roller			R		
Hot Roller Cleaning Roller			R		
Pressure Roller Cleaning Felt Roller			R		(☛3.9.9)
Fusing Belt Lubrication Roller			R		
Heating Roller			C, L		
Heating Roller Shaft Bearings					Service Life: 1200K
Hot Roller Shaft Bearings			C, L		Service Life: 1200K
Pressure Roller Shaft Bearings			R		
Hot Roller Cleaning Roller Shaft Bearings			C, L		Service Life: 1200K
Fusing Belt Strippers / Pressure Roller Strippers		C, L			Dry Cloth
Thermistors		C			

	150K	300K	600K	EM	Note
OTHER					
Circuit Breaker					Check the operation one a year.
Dust Filters		R			
Ozone Filters					Service Life: 1200K
Waste toner bottle	IR	IR	IR		Empty and clean every inspection.

	150K	300K	600K	EM	Note
PAPER FEED (Copier)					
Registration Rollers		C			Alcohol, dry cloth
Paper Dust Removal Unit		C			Dry cloth
Registration Sensor		C			Blower brush
Vertical Transport Roller Sensors		C			Blower brush
LCT Relay Sensor		C			Blower brush
Bypass Feed Sensor		C			Blower brush
Bypass Paper End Sensor		C			Blower brush
Double-Feed detection Sensor		C			Blower brush
Double Feed Detection LED		C			Blower brush

Downloaded from www.Manualslib.com manuals search engine

	150K	300K	600K	EM	Note
PAPER FEED (Trays)					
Feed Guide Plate		C			Dry cloth
Grip Rollers (Drive & Idle)		C			Alcohol, dry cloth
Pick-up Rollers (Tray 1 to Tray 3)					Service Life: 1000K Replace if jams, double-feeds occur with increasing frequency.
Paper Feed Rollers (Tray 1 to Tray 3)					
Separation Rollers (Tray 1 to Tray 3)					
Grip Roller (Drive Roller)		C			Dry cloth
Paper Feed Sensor		C			Blower brush
Vertical Feed Sensors		C			Blower brush
Paper-End Sensor		C			Blower brush

	150K	300K	600K	EM	Note
DUPLEX UNIT					
Inverter Roller		C			Blower brush
Reverse Rollers (Drive & Idle)		C			Alcohol, dry cloth
Duplex Rollers		C			Dry cloth
Transport Rollers (x4)		C			Dry cloth
Duplex Entrance Anti-Static Brush		C			Dry cloth
Inverter Junction Gate		C			Dry cloth
Inverter Roller		C			Dry cloth

	150K	300K	600K	EM	Note
PAPER EXIT					
Heat Dissipation Roller		C			Alcohol, dry cloth
Exit Anti-Static Brush		C			Inspect, replace if deformed.
Paper Exit Rollers (Upper, Lower)		C			Alcohol, dry cloth
Paper Exit Sensor		C			Blower brush
Transport Rollers		C			Blower brush

Downloaded from www.Manualslib.com manuals search engine

ARDF PM Parts

NOTE: The "K" number in the table below is the number of originals that have been fed.

	Every PM Visit	Every 120K	EM	Note
External Covers	I, C			Alcohol or water, dry cloth
Feed Belt	C	R	R	
Pick-up Roller	C	R	R	
Separation Roller	C	R	R	
Original Length Sensors	C		C	Blower brush
Skew Correction Sensor				
Interval Sensor				
Registration Sensor				
Paper Exit Sensor				
Lower Inverter Sensor				
Separation Sensor				
Upper Inverter Sensor				
White Cover	C		C	Alcohol or water, dry cloth
Transport Belt	C	R	C	
Feed Drive Gears	L			G501 Grease
Grip Roller			C	Alcohol or water, dry cloth
Transport Rollers			C	
Scanner Rollers (Entrance/Exit)			C	
Exit Rollers			C	
Inverter Rollers (Lower, Exit, Upper)			C	
Idle Rollers			C	

Downloaded from www.Manualslib.com manuals search engine

2.3.2 2000/3000-SHEET BOOKLET FINISHER B700/B701

	300K	2400K	3000K	4000K	EM	Note
FINISHER						
Covers					I,C	Alcohol or water, dry cloth
Drive Rollers					C	Damp cloth, dry cloth
Idle Rollers					C	Damp cloth, dry cloth
Anti-Static Brush					C	Dry cloth
Sensors					C	Blower brush
Corner Stapler				R		Print an SMC report with **SP5990**. Replace the unit if the staple count is 500K.
Booklet Stapler				R		Print an SMC report with **SP5990**. Replace the unit if the staple count is 200K.

2.3.3 PUNCH B702

PUNCH	300K	2400K	3000K	4000K	EM	
Punch Waste Hopper	I	I	I	I	I	Remove and empty
Punch Unit						Replace after 1000k punches.

2.3.4 3000-SHEET FINISHER B706

	350K	700K	1050K	Note
FINISHER				
Driver rollers	I	I	I	Alcohol
Idle rollers	I	I	I	
Discharge brush	I	I	I	
Shaft Bearings	I	I	I	Lubricate with silicone oil if noisy.
Sensors	I	I	I	Blower brush.
Jogger fences	I	I	I	Make sure that the screws are tight.
Staple waste hopper	C	C	C	Empty staple waste.

2.3.5 PUNCH B531

PUNCH	300K	450K	600K	EM	Note
Punch Waste Hopper	I	I	I		Remove and empty

Downloaded from www.Manualslib.com manuals search engine

2.3.6 COVER INTERPOSER TRAY B704

	60K	120K	180K	EM	Note
The PM interval is for the number of sheets that have been fed.					
Feed Belt	R	R	R		Replace as a set.
Pick-up Roller	R	R	R		
Separation Roller	R	R	R		
Driver Rollers	C	C	C		Damp clean cloth.
Idle Rollers	C	C	C		
Discharge Brush	C	C	C		
Sensors	C	C	C		Blower brush.

2.3.7 LCT B473

	1000K	2000K	3000K	Expected	Note
Paper feed roller	R	R	R		
Pick-up roller	R	R	R		
Separation roller	R	R	R		
Transport guide plate	Inspect and clean every 350K.				
Grip roller					

Downloaded from www.Manualslib.com manuals search engine

2.4 LUBRICATION POINTS

2.4.1 COPIER

OPC, ITB Replacement

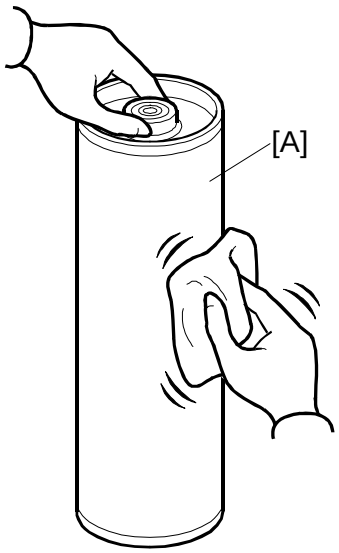

B023R960.WMF

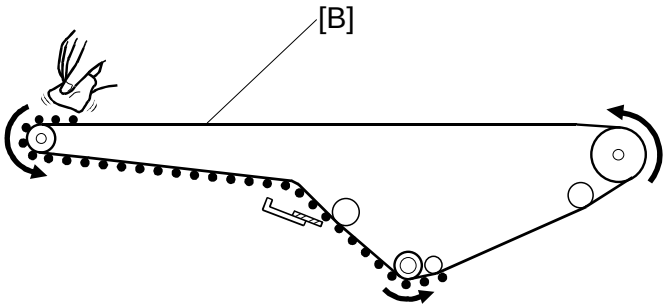

B132R319.WMF

Be sure to apply Lubricant Powder B1329700 when re-installing the drum [A] or ITB [B].

For more, please refer to section "3. Replacement and Adjustment".

Downloaded from www.Manualslib.com manuals search engine

Fusing Unit

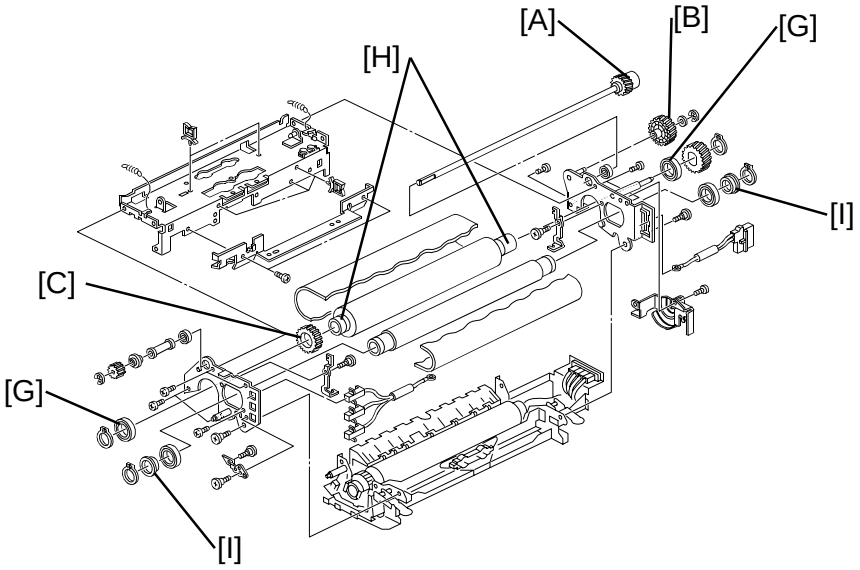

B132P906.WMF

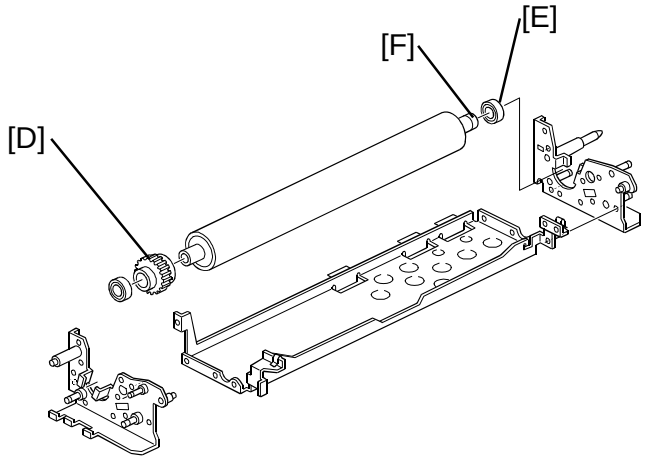

B132P907.WMF

	Part Name	Lubricant	Comment
[A]	Hot Roller Drive Gear	Barrierta S552R	Brush all gear teeth
[B]	Exit Idle Gear		
[C]	Upper Gear		
[D]	Lower Gear		
[E]	Bearing Race ϕ20 x ϕ32 x 7	Barrierta S552R	
[F]	Hot Roller Sleeve		Be sure to brush both ends.
[G]	Bearing Race ϕ25 x ϕ37 x 7		
[H]	Hot Roller Sleeve		
[I]	Bearing Race		

Downloaded from www.Manualslib.com manuals search engine

3. REPLACEMENT AND ADJUSTMENT

3.1 GENERAL CAUTIONS

Never switch off either power switch while any of the electrical components are operating. Doing so might cause damage to units such as the transfer belt, drum, and development unit when they are pulled out of or put back into the copier.

3.1.1 DRUM

An organic photoconductor (OPC) drums are more sensitive to light and ammonia gas than a selenium drum. Follow the cautions below when handling an OPC drum.

1. When a PCU is removed from the machine, always place it on the PCU stand provided with the machine.
2. Never expose a drum to direct sunlight.
3. Never expose a drum to direct light of more than 1,000 Lux for more than a minute.
4. Never touch a drum surface with bare hands. If the drum surface is touched with a finger or becomes dirty, wipe it with a dry cloth or clean it with wet cotton. Wipe with a dry cloth after cleaning with wet cotton.
5. Never use alcohol to clean the drum (alcohol dissolves the drum surface).
6. Store drums in a cool, dry place away from heat.
7. Take care not to scratch the drum as the drum layer is thin and is easily damaged.
8. Never expose a drum to corrosive gases such as ammonia gas.
9. Dispose of used drums in accordance with local regulations.

3.1.2 PCU

1. The PCU stand is stored in a rack attached to the bottom of the machine with strong magnets.
2. Before pulling a PCU out of the machine, spread some clean paper to catch spilt toner, remove the PCU stand from the bottom of the machine, clean it with a clean cloth, and then set the PCU stand on the paper to hold the PCU as soon as it is removed from the machine.
3. To prevent drum scratches, always set the PCU on the stand and leave it there as long as it is out of the machine.
4. Remove only one PCU at a time for servicing. Only one PCU stand is provided with the machine.

Downloaded from www.Manualslib.com manuals search engine

3.1.3 TRANSFER BELT UNIT

1. Never touch the transfer belt surface with bare hands.
2. Take care not to scratch the transfer belt, as the surface is easily damaged.
3. Before installing a new transfer belt, clean all the rollers and the inner part of the transfer belt with a dry cloth to prevent the belt from slipping.

3.1.4 SCANNER UNIT

1. When installing a new exposure glass, make sure that the white paint mark is at the rear left corner.
2. Clean the exposure glass with alcohol or glass cleaner to reduce the amount of static electricity on the glass surface.
3. Use a cotton pad with water or a blower brush to clean the mirrors and lenses.
4. Never bend or crease the exposure lamp cables.
5. Never disassemble the lens unit. Doing so will throw the lens and the copy image out of focus.
6. Never adjust any CCD positioning screw. Doing so will throw the CCD out of position.

3.1.5 LASER UNIT

1. Never loosen the screws that secure the LD drive board to the laser diode casing. Doing so would throw the LD unit out of adjustment.
2. Never adjust the variable resistors on the LD unit, as they are adjusted in the factory.
3. Never open the optical housing unit. The polygon mirror and lenses are sensitive to dust.
4. Never touch the glass surface of the polygon motor unit with bare hands.

Downloaded from www.Manualslib.com manuals search engine

3.1.6 DEVELOPMENT

1. Avoid nicking or scratching the development roller.
2. Place a development unit on a sheet of paper after removing it from a PCU.
3. Always clean the drive gears after removing used developer.
4. Always dispose of used developer in accordance with local regulations.
5. Never load types of developer and toner into the development unit other than specified for this model. Doing so will cause poor copy quality and toner scattering.
6. Immediately after installing new developer during the machine installation procedure, do **SP3811 001**.
7. Immediately after replacing the developer, see section 3.5.7 for the correct SPs to do.
8. Never do **SP 3801** or **3811** with used developer.
9. When using a vacuum cleaner to clean the development unit casing, always ground the casing with your fingers to avoid damaging the toner density sensor with static electricity.
10. After replacing the TD sensor:
    - Replace the developer in the PCU where the TD sensor was replaced.
    - Then do **SP3801 001~006** only for the PCU where the TD sensor was replaced.

Very Important:

ONLY INITIALIZE THE TD SENSOR ONE TIME. DO NOT DO IT MORE THAN ONE TIME.

Only initialize the TD sensor at the following times:

- At installation, exactly as explained in the installation procedure.
- After you replace developer (only initialize the TD sensor for the color that you replaced)
- As instructed in specific troubleshooting procedures.

If you do not obey the above instructions, you will get toner scattering inside the machine.

Downloaded from www.Manualslib.com manuals search engine

3.1.7 CLEANING

1. When servicing cleaning components, avoid nicking the edges of the cleaning blades.
2. Never handle a cleaning blade with bare hands.
3. Before disassembling a cleaning section, place a sheet of paper under it to catch any toner falling.

3.1.8 FUSING UNIT

1. Never handle fusing lamps and rollers with bare hands.
2. Make sure that the fusing lamps are positioned correctly and do not touch the inner surface of the rollers.

3.1.9 PAPER FEED

1. Do not touch the surfaces of the pick-up, feed, and separation rollers.
2. To avoid paper misfeeds, the side fences and end fence of the paper trays must be positioned correctly to align with the actual paper size.

3.1.10 USED TONER (WASTE TONER)

1. We recommend checking the amount of used toner at every EM (Emergency Maintenance).
2. Always dispose of used toner in accordance with local regulations.
3. Never throw toner into an open flame.

Downloaded from www.Manualslib.com manuals search engine

3.2 COMMON REMOVAL PROCEDURES

3.2.1 ARDF

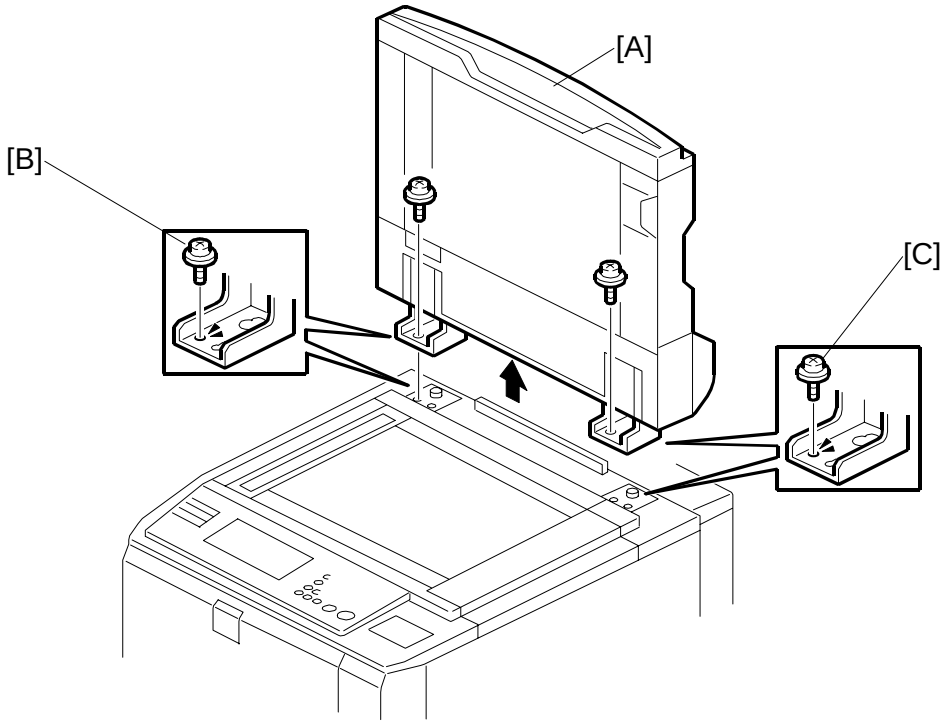

1. Raise the ARDF [A] to the vertical position.
2. At the rear, left corner of the machine, disconnect the ARDF cable.
3. Remove the left screw [B] and right screw [C].
4. Slide the ARDF back until the heads of the screws are in the large end of the keyholes, then lift the ARDF off the machine.

⚠CAUTION

The ARDF is very heavy. Remove it carefully.

Downloaded from www.Manualslib.com manuals search engine

3.2.2 OPERATION PANEL, TOP COVERS

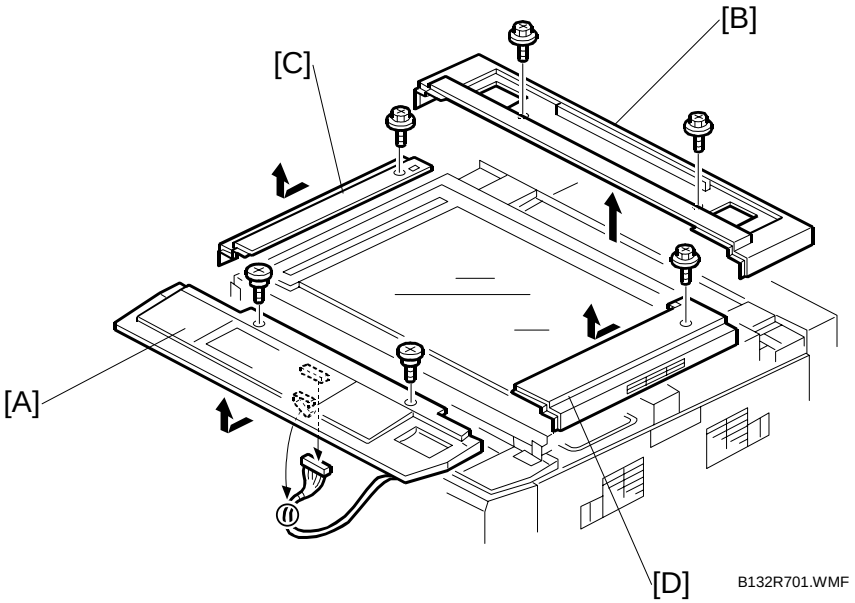

- Remove the ARDF (x1, x2).
- Open the front door.

Remove:

[A]: Operation panel (x1, x2)
[B]: Top rear cover (x2)
[C]: Left top cover (x1)
[D]: Right top cover (x1)

Downloaded from www.Manualslib.com manuals search engine

3.2.3 LEFT COVERS

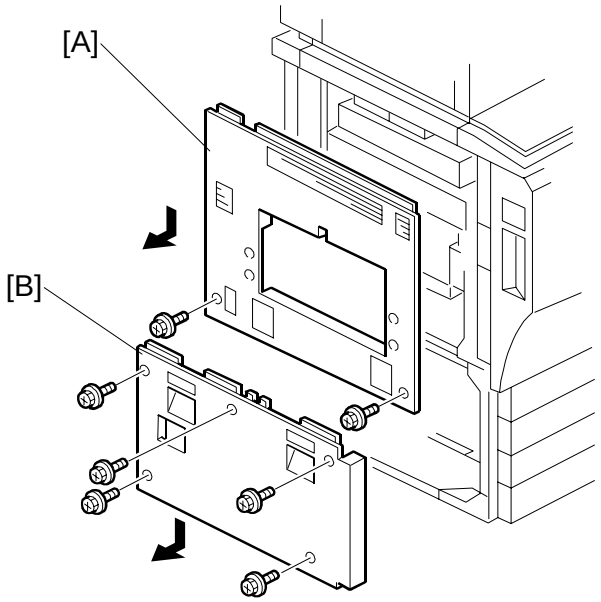

B132R702.WMF

- If a finisher is installed, disconnect it. Then remove the front and rear finisher joint brackets.

Remove:

[A]: Left upper cover (☞ x2)
[B]: Left lower cover (☞ x5)

Reinstallation

- Make sure all the cover tabs are inserted correctly before you fasten the screws.

Downloaded from www.Manualslib.com manuals search engine

3.2.4 FRONT DOOR

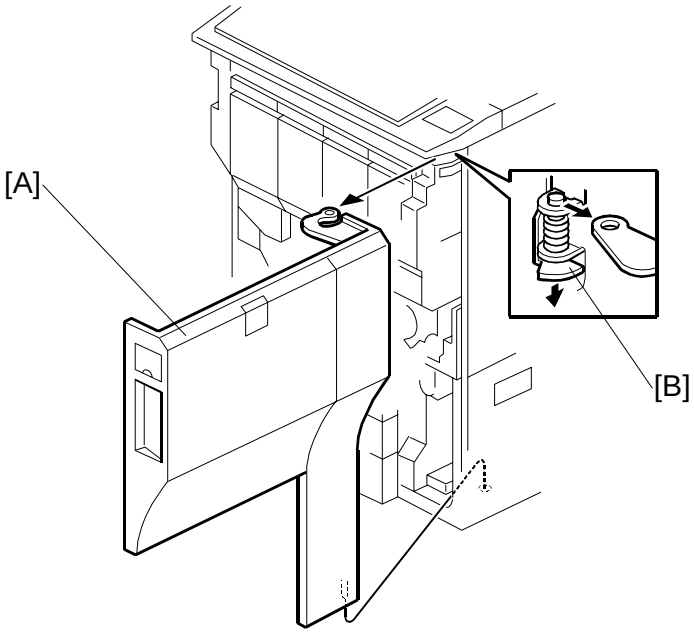

B132R703.WMF

1. Grip the front door [A] with one hand.
2. Press down the hinge bracket [B].
3. Lift the front door slightly to remove it.

Important: If you must replace the front door, make sure that you put the SD cards from the storage location in the old front door into the storage location in the new front door. (☛ 3.2.12)

Downloaded from www.Manualslib.com manuals search engine

3.2.5 RIGHT COVERS

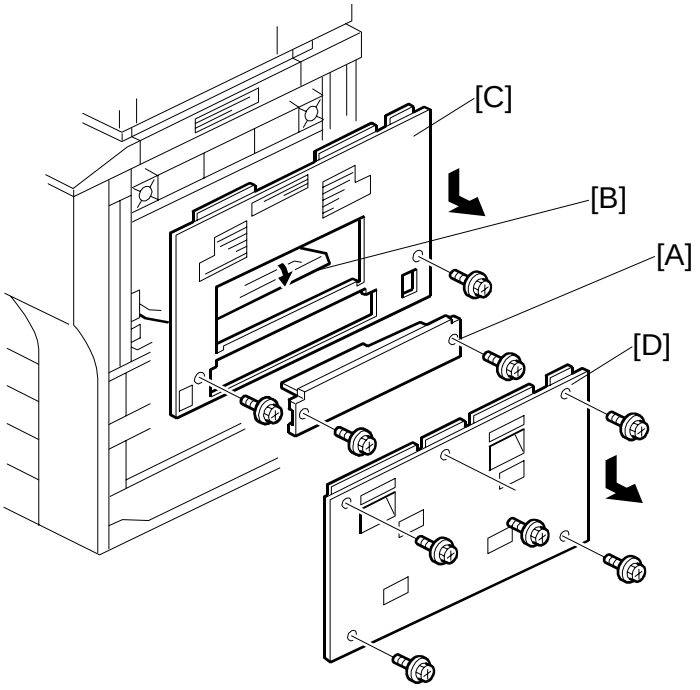

B132R704.WMF

Remove:

- Disconnect and separate the LCT if it is installed.

[A]: LCT installation cover (☞ x2). This has been removed already if the LCT has been installed.
[B]: Open the bypass tray.
[C]: Right upper cover (☞ x2). Pull the bottom of the cover down and toward you as you remove it.
[D]: Right lower cover (☞ x5). Pull the bottom of the cover down and toward you as you remove it.

Reinstallation

- Make sure all the cover tabs are inserted correctly before you fasten the screws.

Downloaded from www.Manualslib.com manuals search engine

3.2.6 REAR COVERS

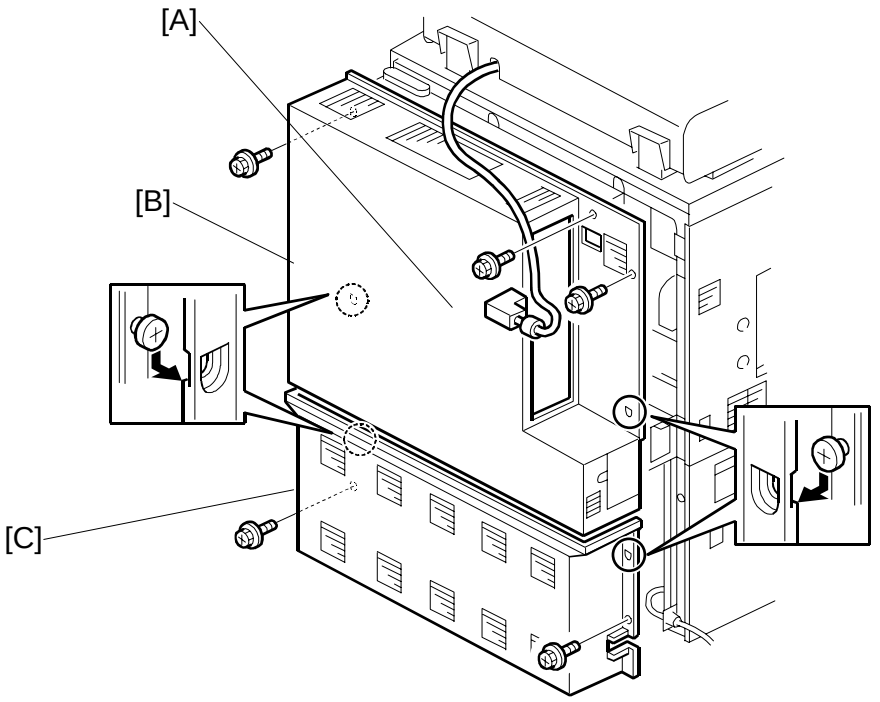

B132R705.WMF

Remove:

[A]: ARDF connector (☞ x1)
[B]: Rear upper cover (☞ x3)
[C]: Rear lower cover (☞ x2)

- Remove the bottom screws
- Do not remove the shoulder screws.

Downloaded from www.Manualslib.com manuals search engine

3.2.7 TONER HOPPER, FACE PLATE, PCU

Removing Toner Hopper, Face plate, PCU

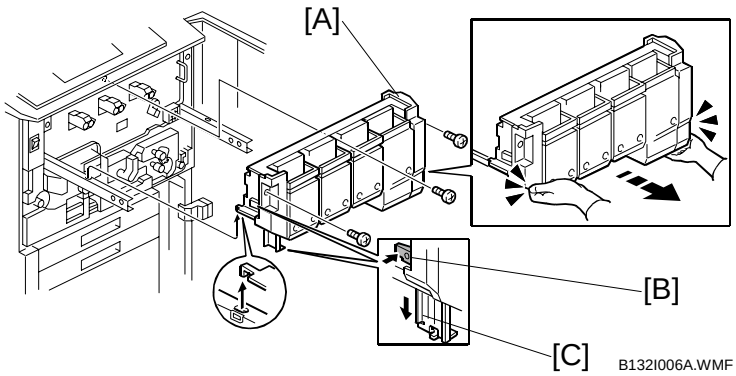

Important: To avoid damaging the toner end sensor, make sure that the main power switch is turned off and that the power cord is disconnected from the power source before you remove the toner hopper.

To remove the toner hopper:

1. Prepare an open space on the floor for the toner hopper.
2. Remove the screws of the toner hopper [A] (🔩 x3).
3. Place your hands under the left and right corners of the toner hopper and slowly pull it out on its rails until it stops.

   IMPORTANT: THE TONER HOPPER CAN EASILY SLIP OFF ITS RAILS.
4. Press the release [B] to drop the support leg [C].
5. Confirm that the support leg is down and locked.

   IMPORTANT: ALWAYS MAKE SURE THAT THE SUPPORT LEG IS DOWN AND LOCKED BEFORE YOU REMOVE THE TONER HOPPER.
6. Lift the toner hopper off its rails and set it on the floor.

⚠CAUTION
The toner hopper is heavy! Lift it carefully, make sure that it disengages completely from the rails on the left and right, and then set it on the floor.

7. Push the toner hopper rails into the machine.

Downloaded from www.Manualslib.com manuals search engine

To remove the face plate

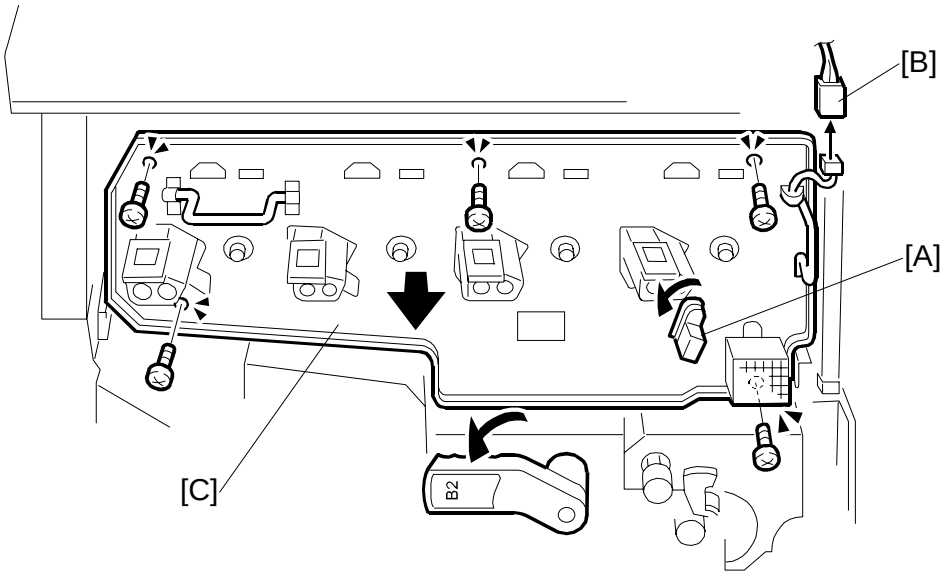

B132R201.WMF

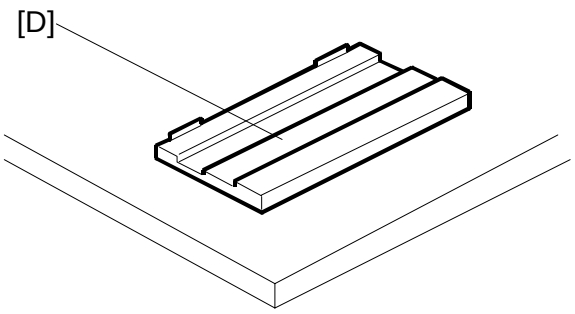

B132I902.WMF

8. Rotate the transfer belt release lever [A] counter-clockwise until it stops.
9. Disconnect the fan connector [B].
10. Remove the face plate [C] (x5).
11. Place the PCU stand [D] on a flat surface.
    NOTE: The PCU stand is mounted on a rack attached to the bottom of the copier with magnets.
12. Wipe the surface of the stand with a clean cloth to remove dust.

Downloaded from www.Manualslib.com manuals search engine

To remove a PCU

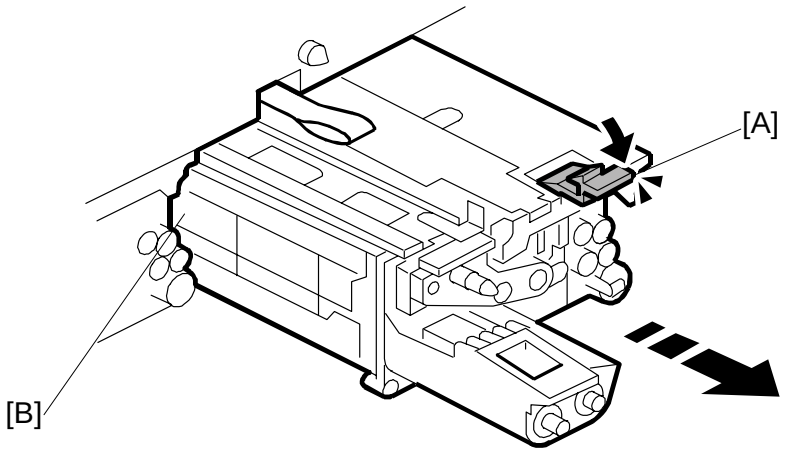

B132R202A.WMF

Important: To prevent damage to the drum potential sensor and its relay board, always make sure that the machine is turned off and that the power cord is disconnected from the power source before you remove a PCU.

13. While pressing down the release tab [A] above the PCU, pull the PCU [B] out of the machine.

Downloaded from www.Manualslib.com manuals search engine

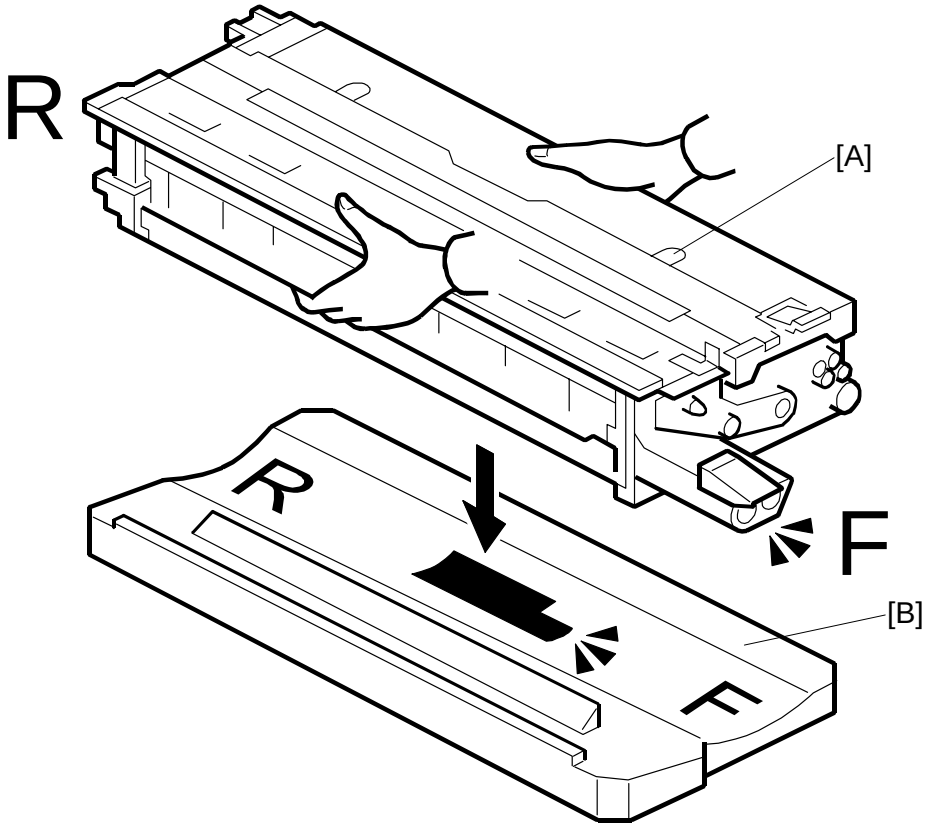

B132R214.WMF

IMPORTANT

- **THE OPC DRUM IS EXPOSED ON THE BOTTOM OF THE PCU.**
- **NEVER PLACE YOUR HAND UNDER THE PCU.**
- **NEVER PLACE THE PCU ON ANY SURFACE OTHER THAN THE PCU STAND.**

14. Set the PCU [A] on the PCU stand [B].
    NOTE: In the diagram, **F** is the front, and **R** is the rear.

Downloaded from www.Manualslib.com manuals search engine

Reinstalling PCU, Face plate, Toner Hopper

To reinstall a PCU:

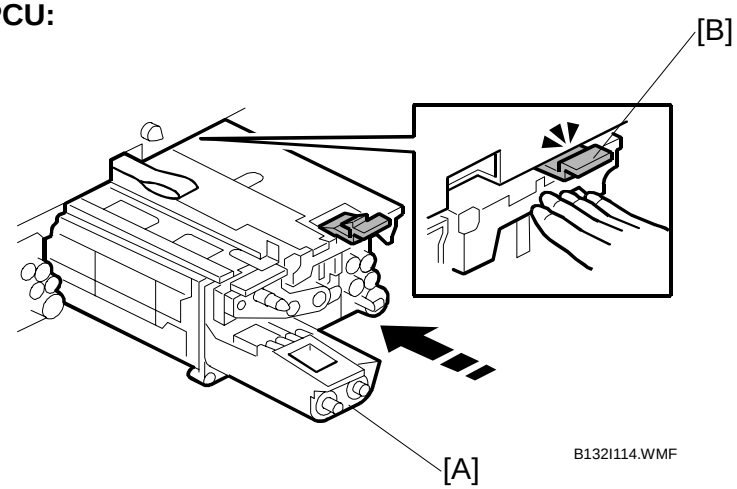

1. Hold the PCU [A] in front of the slot where you removed it
2. Engage the rails [B] with the slots in the sides of the PCU.
3. Slowly push the PCU into the slot. Make sure the release tab [C] above the PCU is locked.
   NOTE: If the PCU does not go in smoothly, make sure the rails [B] and grooves are engaged correctly.

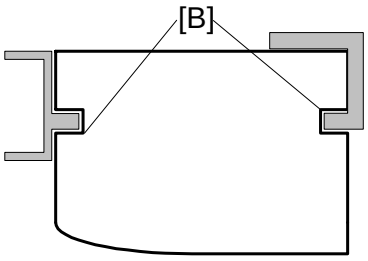

Important!

- If you have replaced a developer cartridge in a PCU, be sure to remove the film seals [D] of every replaced developer cartridge after you reinstall it in the machine.
- To release the developer into the PCU, pull out the film seal [D].

  NOTE: Put your other hand on the PCU [E] to keep it stable it while you pull on the film seal.

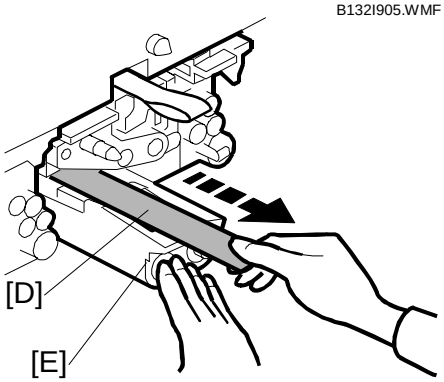

Downloaded from www.Manualslib.com manuals search engine

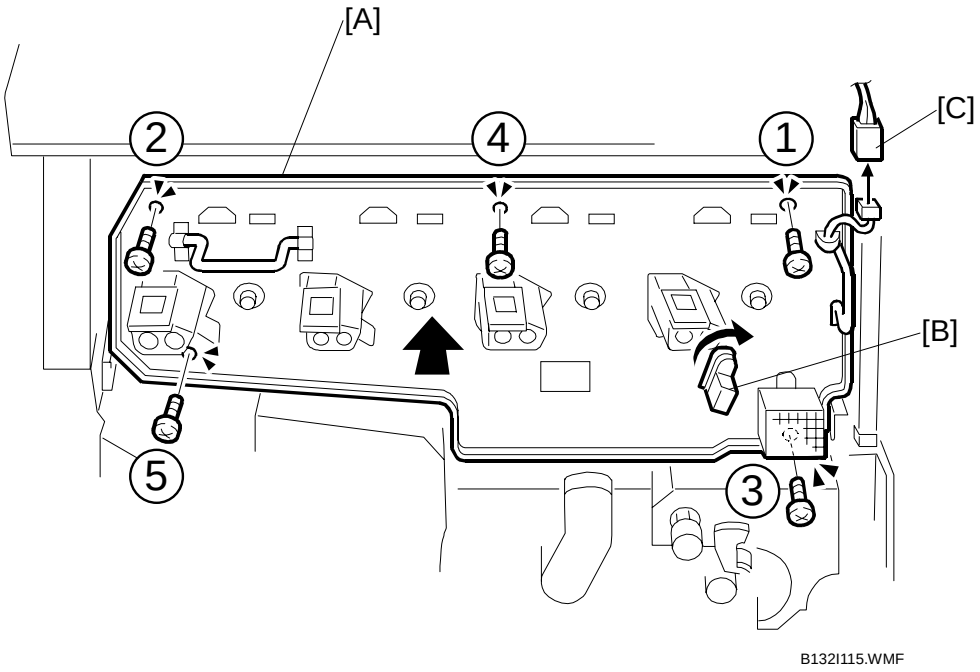

To reinstall the face plate:

1. When you reattach the face plate [A], fasten the screws in the order shown by the numbers above (x5).
   Important: Do not over tighten these screws.
2. Rotate the transfer belt release lever [B] clockwise to lock it.
3. Reconnect the fan connector [C] (x1).

Downloaded from www.Manualslib.com manuals search engine

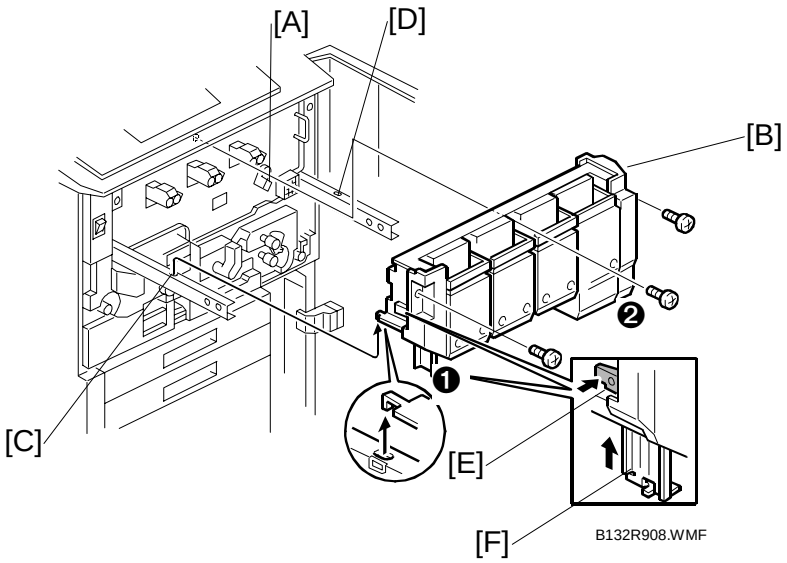

To reinstall the toner hopper:

1. Confirm that the transfer belt release lever [A] is up and locked before you reattach the toner hopper.
2. Make sure the toner hopper rails are fully extended, then set the toner hopper [B] on the rails.
3. Make sure the steel tabs of the toner hopper are inserted into the holes on the left rail [C] and right rail [D].
4. Push up the release [E] and support leg [F].

   Important: Make sure that the support leg is up and locked before you push the toner hopper into the machine.
5. Place your hands at the bottom of the toner hopper at ❶ and ❷ and then push the toner hopper into the machine against the face plate.

   Important: To avoid damaging the toner hopper, never press in on the top of the toner hopper.
6. Make sure that the toner hopper is flat against the face plate on the right side.

   NOTE: If the toner hopper [B] is not flat against the face plate on the right side, pull it out slightly and make sure that the transfer belt release lever is rotated up completely and locked.
7. Fasten the toner hopper to the face plate (☞ x3).

Downloaded from www.Manualslib.com manuals search engine

3.2.8 IMAGE TRANSFER UNIT

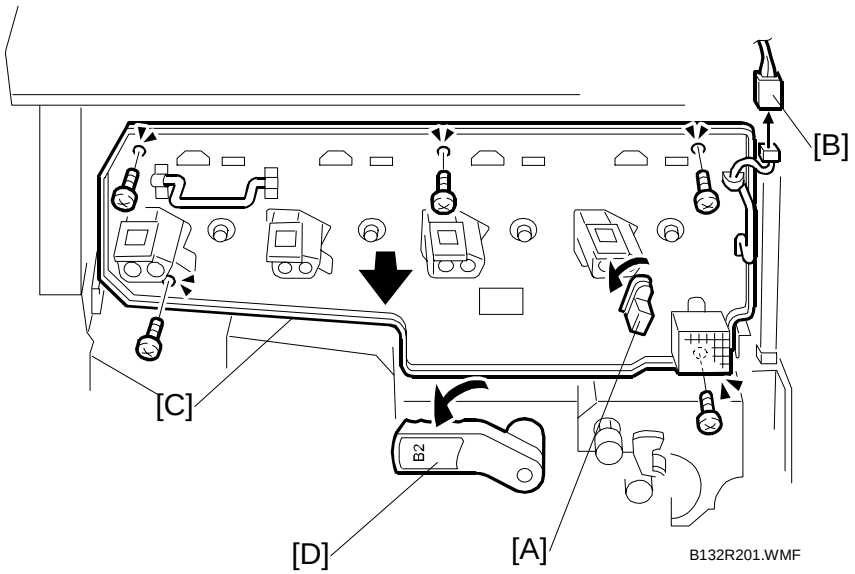

1. Cover the floor or a table with paper to prepare a place to put the image transfer unit.
2. Open the front door.
3. Remove the toner hopper then push the hopper rails into the machine. (☛3.2.7)
4. Rotate the transfer belt release lever [A] counter-clockwise until it stops.
5. Disconnect the fan connector [B].
6. Remove the face plate [C] (x1, x5).
7. Rotate the lever **B2** [D] on the drawer unit counter-clockwise to separate the transfer roller from the ITB.

Downloaded from www.Manualslib.com manuals search engine

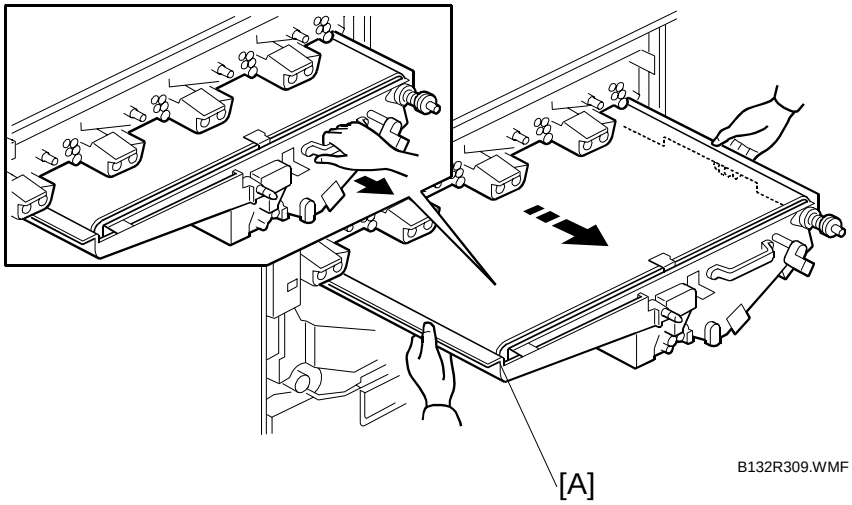

8. Slowly and carefully pull the image transfer unit [A] out of the machine.

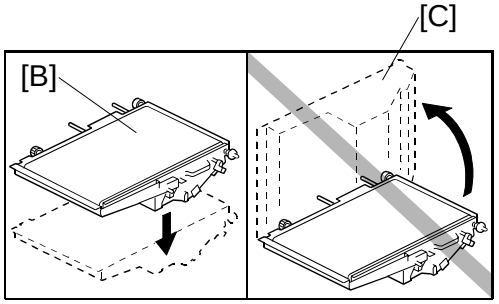

Important!

- Remove carefully. The image transfer unit is heavy and not attached to the rails with screws.
- To prevent toner scattering inside and outside the unit, keep the unit [B] flat when you remove it, lift it, carry it, and put it down.
- Never stand the image transfer unit [C] on its edge before you remove the cleaning unit from the ITB (☛ 3.8.1).
- Never place the image transfer unit on a carpet where toner may scatter or the unit will collect dust.

Reinstallation

- Re-insert the image transfer unit slowly and carefully to avoid snagging the belt on the frame of the machine.
- Make sure that the image transfer unit does not snag on the toner cap of the yellow PCU on the far left.

Downloaded from www.Manualslib.com manuals search engine

3.2.9 DRAWER UNIT

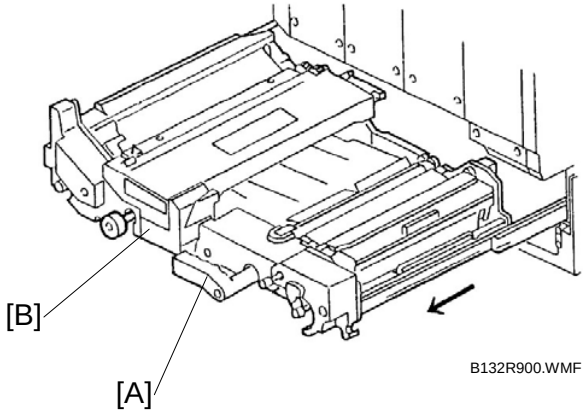

B132R900.WMF

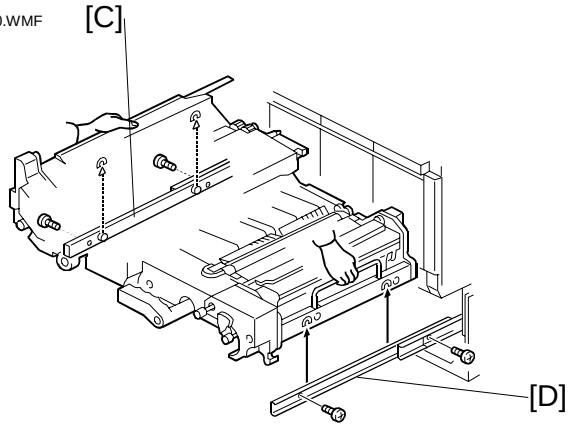

B132R301.WMF

To pull out the drawer unit:

1. Remove the front door. (☛3.2.4)
2. Rotate the lever [A] counter-clockwise until it stops.
3. Grip the lever and pull the unit [B] out of the machine until it stops.

To remove the drawer unit:

4. Disconnect from the left rail [C] (☞ x2).
5. Disconnect from the right rail [D] (☞ x2).
6. Lift the unit off the rails.

⚠CAUTION
The drawer unit is very heavy (30 kg/66lb.). After removing it, push the rails into the machine.

Downloaded from www.Manualslib.com manuals search engine

To re-install the drawer unit

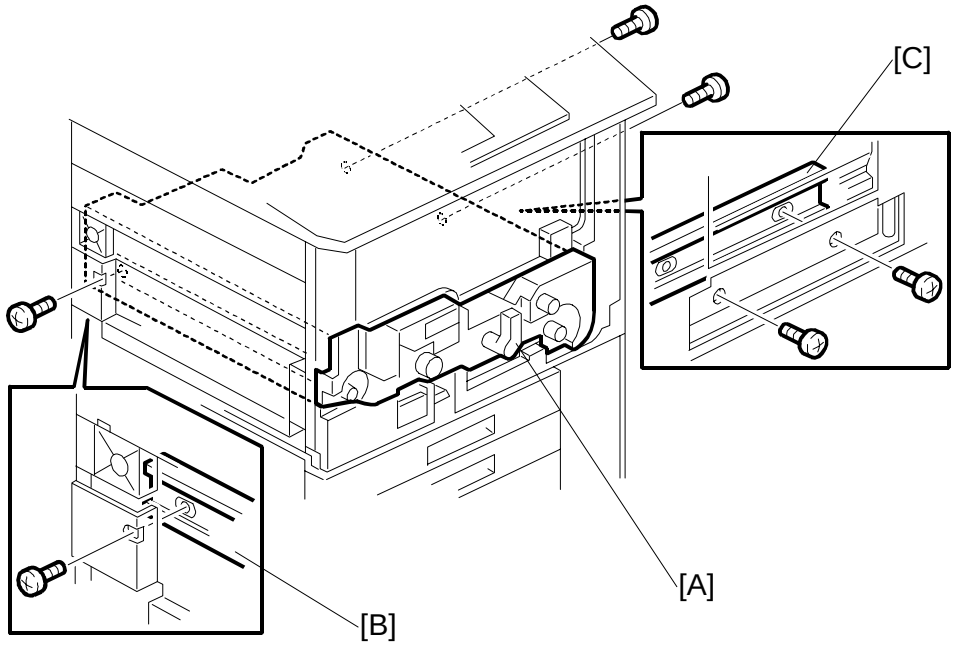

B132R617.WMF

1. Remove the right upper cover and the left upper cover. (☛3.2.3, 3.2.5,)
2. Open the front door.
3. Pull out the left rail and right rail.
4. Set the unit on the rails.

> **⚠CAUTION**
> **The drawer unit is very heavy (30 kg/66lb.). Make sure that hooks are engaged with the holes on the rails.**

5. Slowly push the unit into the machine until it stops.
6. Rotate the lever [A] clockwise to the vertical position.
7. Fasten the screws to the left rail [B] (x2).
8. Fasten the screws to the right rail [C] (x2).

   Important! Make sure these screws are fastened and tight. This ensures that the unit is positioned correctly.

Downloaded from www.Manualslib.com manuals search engine

3.2.10 DUPLEX UNIT

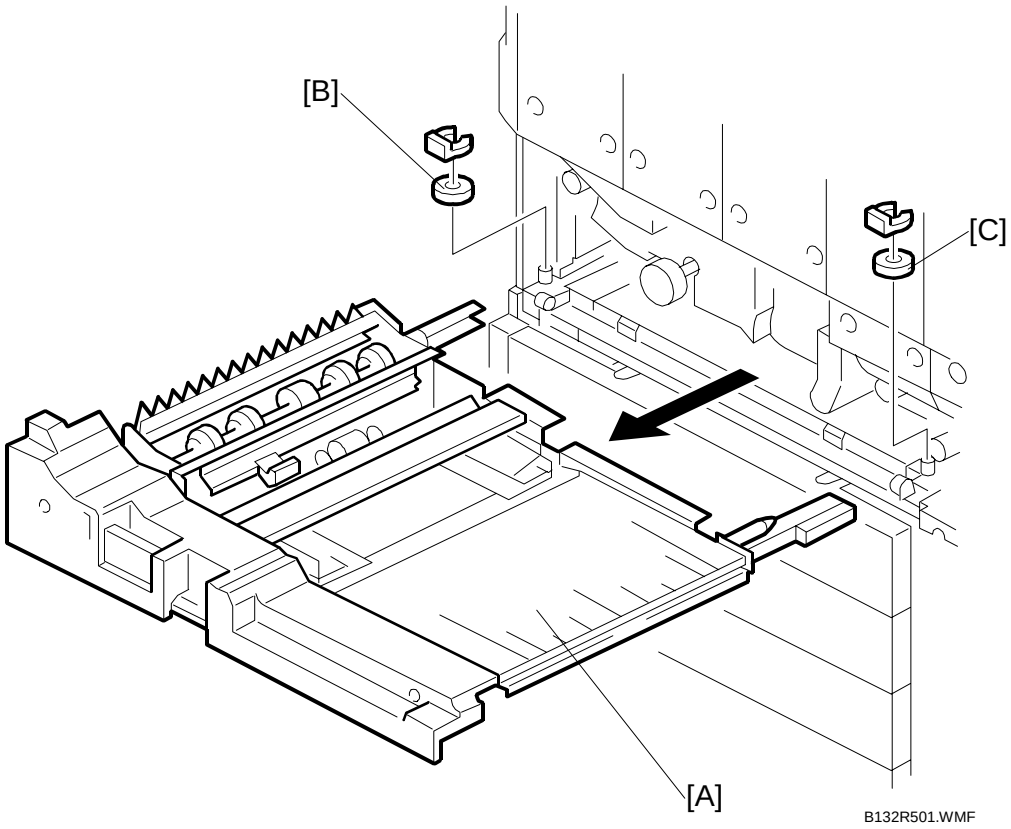

1. Open the front door.
2. Pull the duplex unit [A] out until it stops.
3. Remove the clip ring [B] from the left, rear corner (x1).
4. Remove the clip ring [C] from the right, rear corner (x1).
5. Lift the duplex unit from the rails and place it on a flat, level surface.

Downloaded from www.Manualslib.com manuals search engine

3.2.11 OPENING AND LOCKING THE CONTROLLER BOX COVER

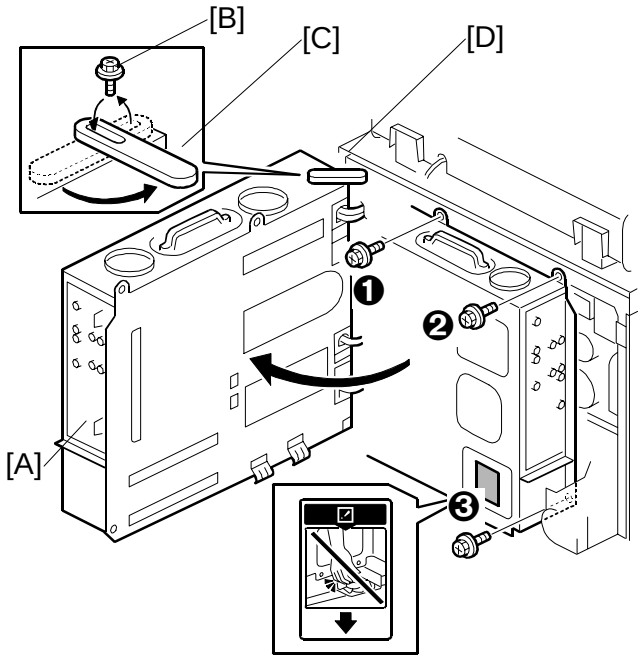

B132R715.WMF

CAUTION: 1) **Before you start this procedure, turn off the main power switch and disconnect the power cord.**
2) **To prevent personal injury and damage to the controller box, when the controller box is open, it should always be locked as described below.**

1. Remove the rear covers (☛3.2.6)
2. Remove controller box screws ❶ ❷ ❸.
3. Open the controller box [A] to the left until it stops.
   Important! Obey the warning on the decal to avoid touching the fan blades when you open and close the controller box.
4. Remove the left screw [B] of the plastic stopper arm [C].
5. Rotate the plastic stopper counter-clockwise until it is aligned with the hole below and its tip [D] is touching the machine frame.
6. Reattach the screw removed in Step 4 to lock the arm in position.

Reinstallation

- Be sure to reattach the stopper arm at its original position before you close the controller box.

Downloaded from www.Manualslib.com manuals search engine

3.2.12 SD CARD STORAGE

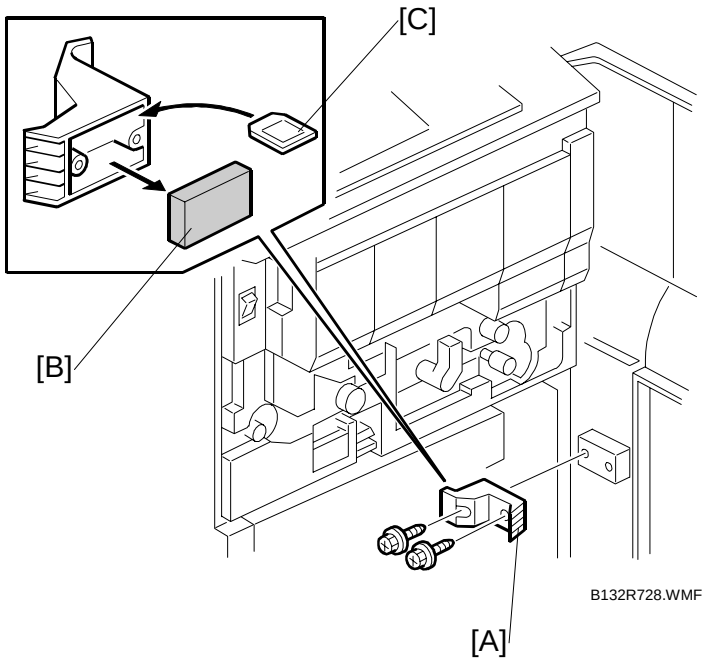

1. Open the front door.
2. Remove the cover [A] on the door (x2).
3. Remove the block [B].
4. Store extra SD cards [C] inside the cover.
5. Reattach the cover to the machine

Important

- When you replace the door, confirm whether SD cards are stored here.
- Remove any SD cards and store them in the new door. These SD cards serve as prove of purchase of MFP options by the customer.

Downloaded from www.Manualslib.com manuals search engine

3.3 SCANNER UNIT

3.3.1 EXPOSURE GLASS

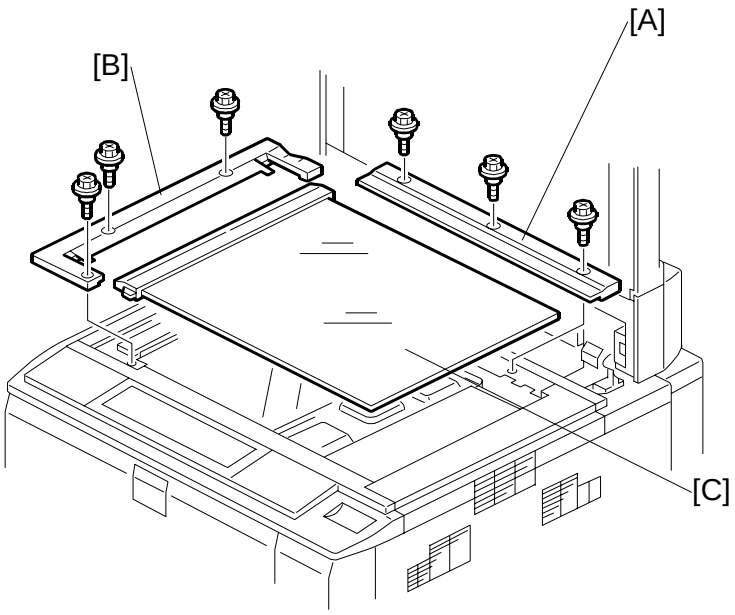

B132R128.WMF

Remove:

[A]: Rear scale (x3)
[B]: Left glass cover (x3)
[C]: Exposure glass

Downloaded from www.Manualslib.com manuals search engine

3.3.2 LENS BLOCK, PAPER SIZE SENSORS

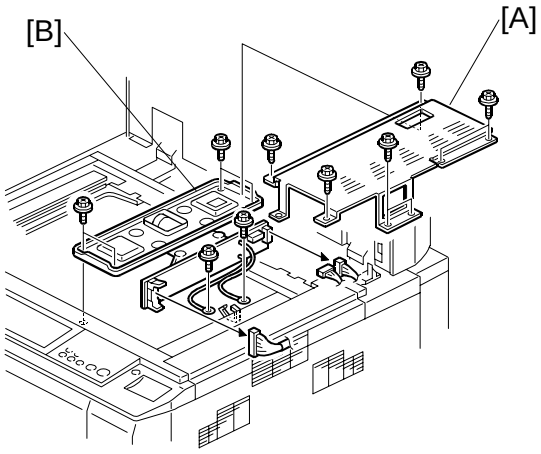

B132R130.WMF

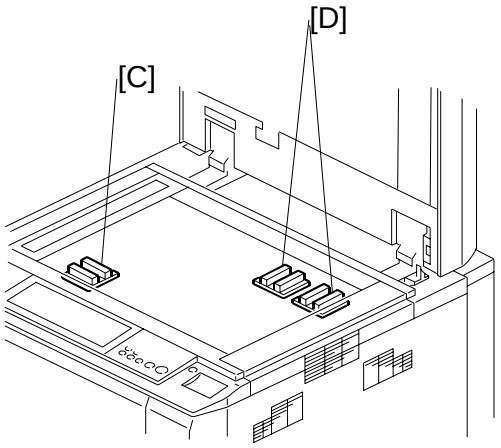

B132R141.WMF

Before you remove the lens block, note the settings of **SP4800 001** to **003** (ARDF density adjustments for R, G, B).

SP4800 001	DF Density Adj: R	ARDF Density Adjustment - Red
SP4800 002	DF Density Adj: G	ARDF Density Adjustment - Green
SP4800 003	DF Density Adj: B	ARDF Density Adjustment - Blue

Remove:

- Exposure glass. (☛3.3.1)

[A]: Lens cover (x8)
[B]: Lens block (x6, x3)

Important: Remove the lens block carefully to avoid damaging the attached PCB. Do not touch the paint-locked screws on the lens block.

[C]: Original width sensor (x1, x1)
[D]: Original length sensors x2 (x1 each, x1 each)

After replacing the lens block, do the following SP codes.

SP4008 001	Sub Scan Mag	Sub Scan Magnification Adjustment
SP4010 001	Sub Scan Reg	Sub Scan Registration Adjustment
SP4011 001	Main Scan Reg	Main Scan Registration Adjustment

After lens block replacement, do some copy samples with the ARDF. Check these points:

- Do the copies have background?
- Is the copy output of the ARDF and platen mode different?

If these problems occur, change **SP4800 001** to **003** to their previous settings, or adjust these SPs until the background is acceptable.

Downloaded from www.Manualslib.com manuals search engine

3.3.3 EXPOSURE LAMP

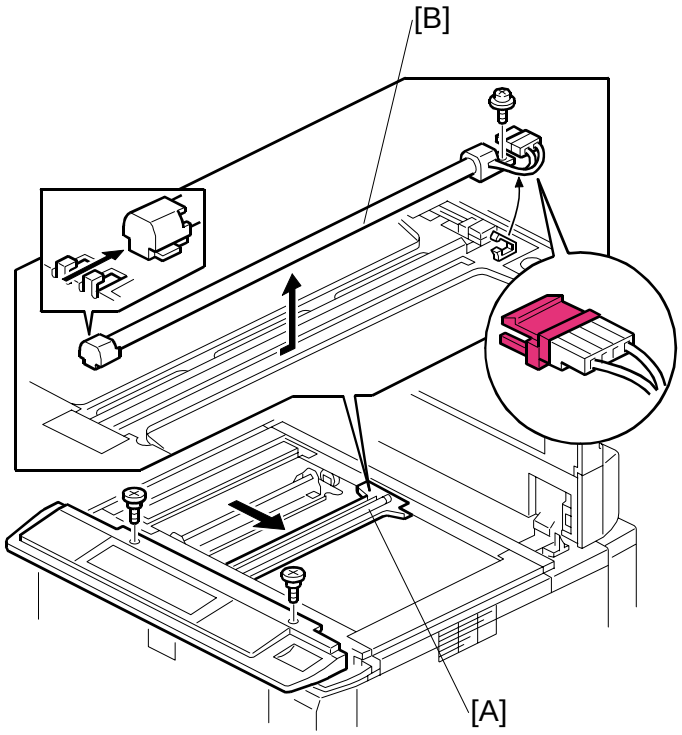

B132R129.WMF

Remove:

- Exposure glass (☛3.3.1)
- Operation panel (☛3.2.2)

1. Slide the 1st scanner [A] to the cutout in the frame.
2. Remove the exposure lamp [B] (x1, x1, x1)

Important:

- Never touch the surface of the exposure lamp with bare fingers.
- Work carefully to avoid damaging the relay plugs attached to the rear ends of the lamp.

Downloaded from www.Manualslib.com manuals search engine

3.3.4 SCANNER MOTOR

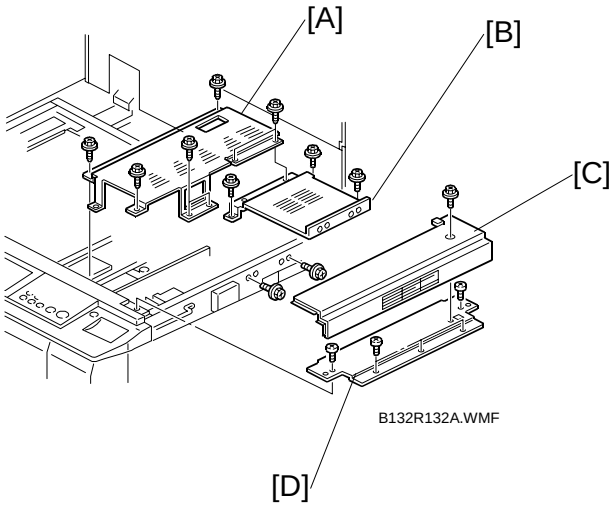

B132R132A.WMF

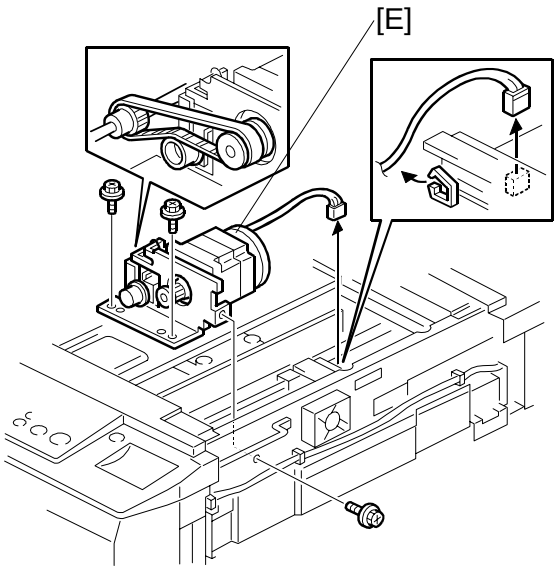

B132R133.WMF

Remove:

- Exposure glass (☛3.3.1)

[A]: Lens cover (☞ x4)
[B]: Right lens cover (☞ x3)
[C]: Top right cover (☞ x1)
[D]: Bracket (☞ x5)
[E]: Scanner motor (Timing belt x1, ⇦x1, ☜ x1, ☞ x3)

Downloaded from www.Manualslib.com manuals search engine

3.3.5 SCANNER HP SENSOR

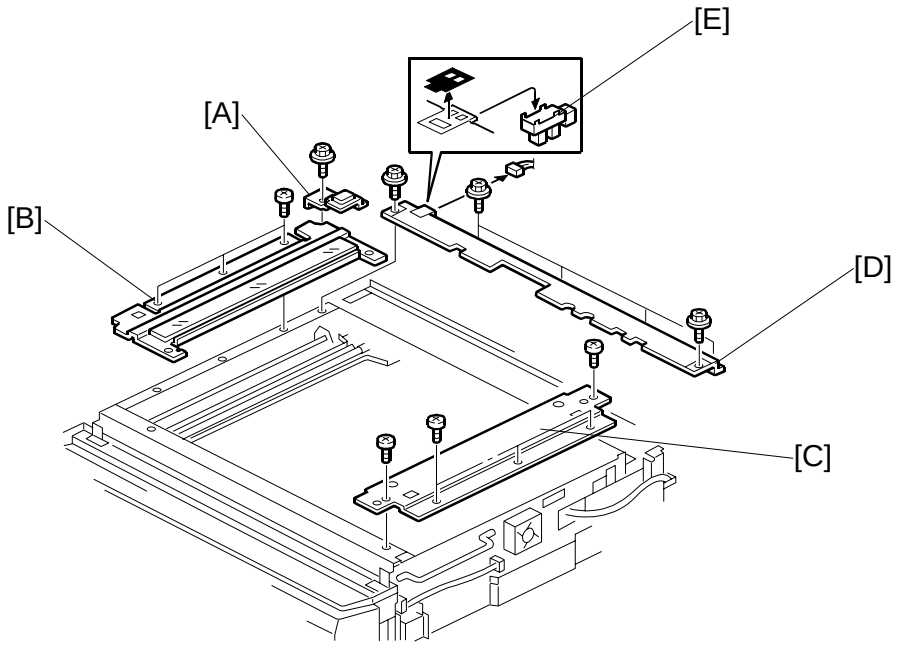

Remove:

- ARDF (☛3.2.1)
- Exposure glass (☛3.3.1)
- Top rear, left, right covers (☛3.2.5)

[A]: Ground plate (x1)
[B]: Left stay (x3)
[C]: Right stay (x5)
[D]: Rear stay (x4)
[E]: Scanner HP sensor (x1)

Downloaded from www.Manualslib.com manuals search engine

3.3.6 SCANNER INTERFACE BOARD (SIOB)

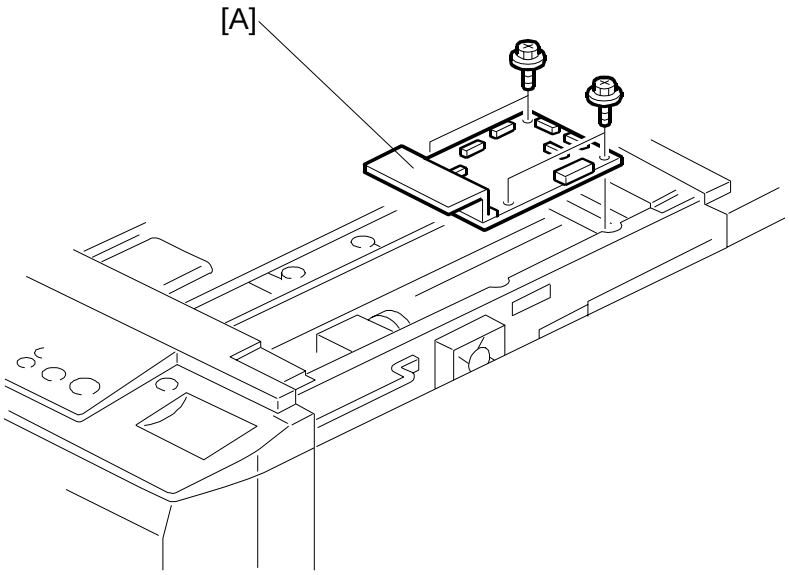

B132R133A.WMF

Remove:

- ARDF (☛3.2.1)
- Exposure glass (☛3.3.1)
- Top, rear, left, right covers (☛3.2.5)
- Right stay, rear stay (☛3.3.5)
- Lens cover (☛3.3.2)

[A]: Scanner interface board (x6, x2)

Downloaded from www.Manualslib.com manuals search engine

3.3.7 SCANNER WIRE

Scanner Wire Removal

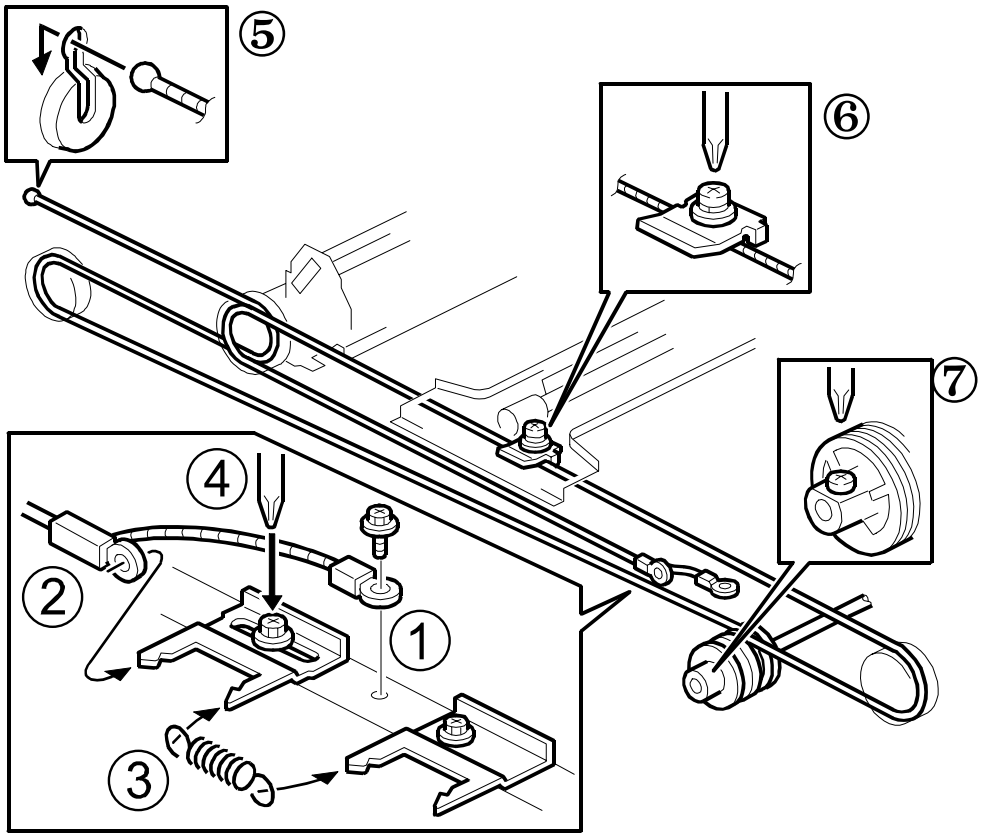

B132R137.WMF

1. Remove wire ground ① (☞ x1)
2. Disconnect the head of wire ② from tension bracket 1.
3. Remove spring ③.
4. Loosen the screw ④ of tension bracket 1.
5. Disconnect the end of wire at ⑤.
6. Remove lock bracket ⑥ of the 1st scanner (☞ x1).
7. Disconnect the wire from the pulley ⑦ (☞ x1).
8. Remove the wire from the scanner.

Downloaded from www.Manualslib.com manuals search engine

Scanner Wire Reinstallation and Scanner Position Adjustment

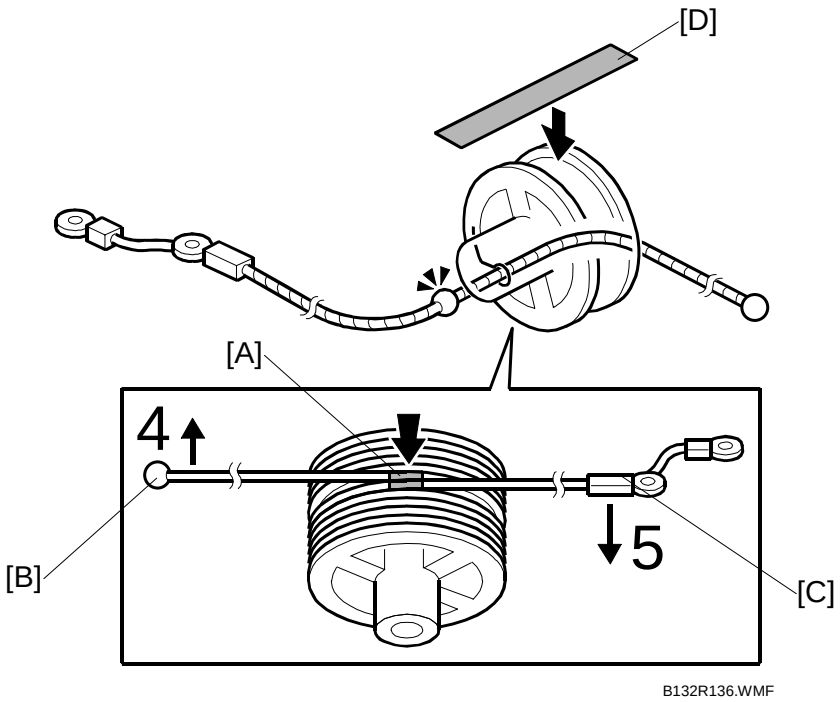

1. Place the beads [A] on the middle of the wire on the pulley openings.
2. Wind the ball end of the wire [B] 4 times.
3. Wind the other end of the wire [C] 5 times.
4. Attach tape [D] across the pulley to temporarily hold the wires in place.

Downloaded from www.Manualslib.com manuals search engine

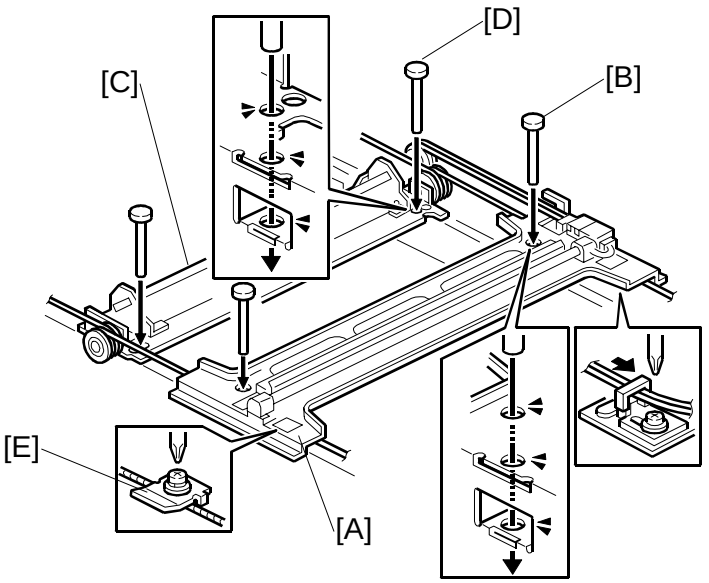

B132R138.WMF

5. Position the 1st scanner [A] so the holes are aligned and insert the positioning pins [B] (x2).
6. Position the 2nd scanner [C] so its holes are aligned and insert the positioning pins [D] (x2).
7. Attach the lock bracket [E] to fasten the wire to the 1st scanner.
8. Tighten the screw of tension bracket (☛④ Section 3.3.7).
9. Attach the pulley and tighten it lock screw (☛⑦ Section 3.3.7).
10. Remove the positioning pins (x4).
11. Remove the tape from the pulley.
12. Slowly push the scanner left and right to confirm that the wires are engaged correctly. The 1st and 2nd scanners should move smoothly.

Downloaded from www.Manualslib.com manuals search engine

3.4 LASER UNIT

⚠WARNING

- **This laser unit employs two laser beams produced by a Class III LD with a wavelength of 648 to 660 nm and intensity of 7 mW. Direct exposure to the eyes could cause permanent blindness.**
- **Before any performing any replacement or adjustment of the laser unit, press the main power switch to power the machine off then unplug the machine from the power source. Allow the machine to cool for a few minutes. The polygon motor continues to rotate for approximately one to three minutes.**
- **Never power on the machine with any of these components removed: 1) LD unit, 2) polygon motor cover, 3) synchronization detector.**

3.4.1 CAUTION DECALS

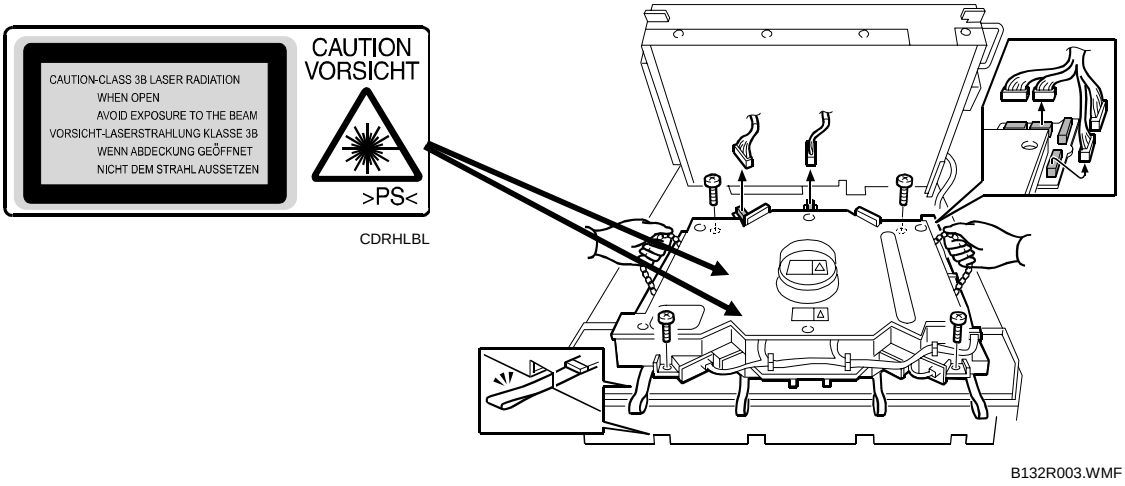

Downloaded from www.Manualslib.com manuals search engine

3.4.2 POLYGON MOTOR

⚠WARNING

Turn off the main power switch and unplug the machine before performing any procedure in this section. Laser beams can seriously damage the eyes.

Important!

- An accidental static discharge could damage the laser diode board attached to the lens block unit.
- Touch a metal surface to discharge any static electricity from your hands.
- The polygon motor rotates at extremely high speed and continues to rotate after you switch the machine off. To avoid damaging the motor, never remove the polygon motor within three minutes of switching off the main power and disconnecting the power plug.

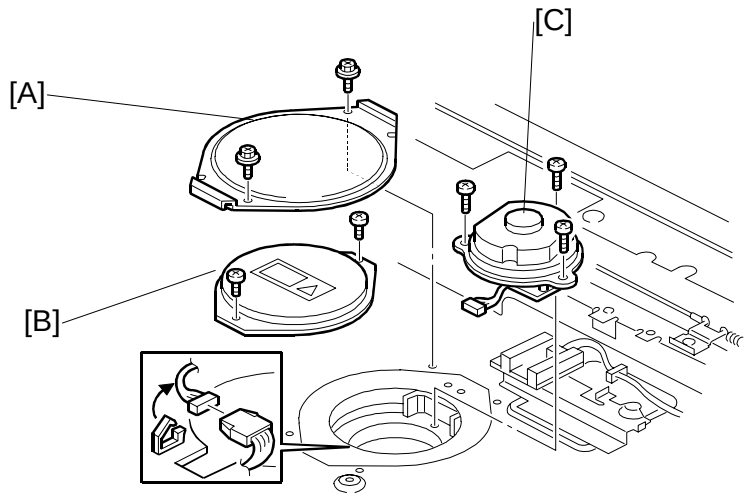

B132R131.WMF

Remove:

- Exposure glass (☛ 3.3.1)
- Lens block (☛ 3.3.2)

[A]: Top cover (x2)
[B]: Middle cover (x2)
[C]: Polygon motor (x3, x1, x1)

Important!

- Do not attempt to remove the paint-lock screws on top of the lens block unit.
- Do not touch the glass covers of the laser ports on the sides of the polygon motor [C]

Downloaded from www.Manualslib.com manuals search engine

3.4.3 LASER UNIT

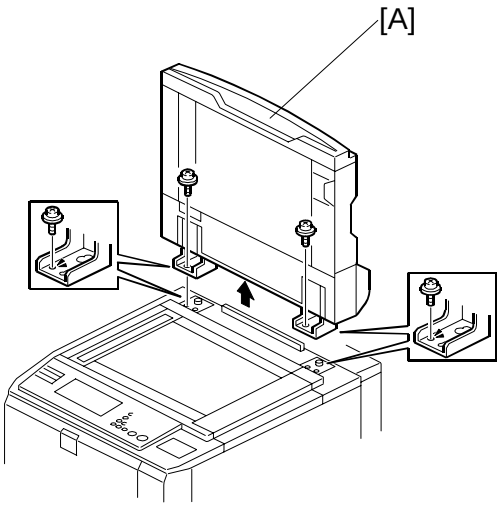

B132R101.WMF

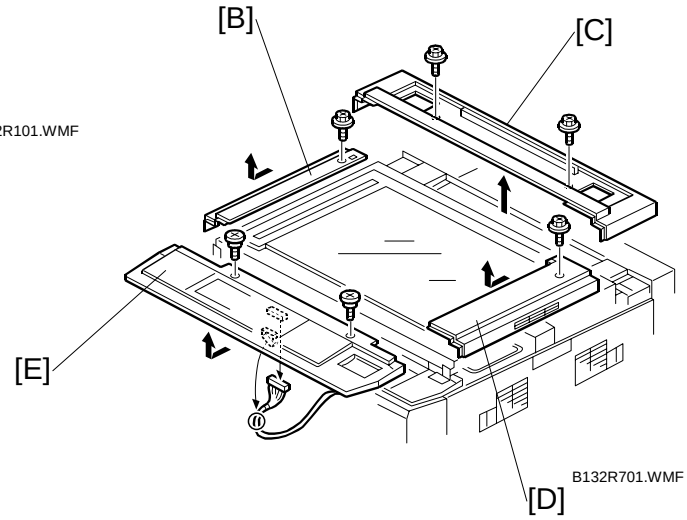

B132R701.WMF

Remove:

[A]: ARDF (x,1 x2)
[B]: Left top cover (x1)
[C]: Rear top cover (x2)
[D]: Right top cover (x1)
[E]: Operation panel (x2, x1)

Downloaded from www.Manualslib.com manuals search engine

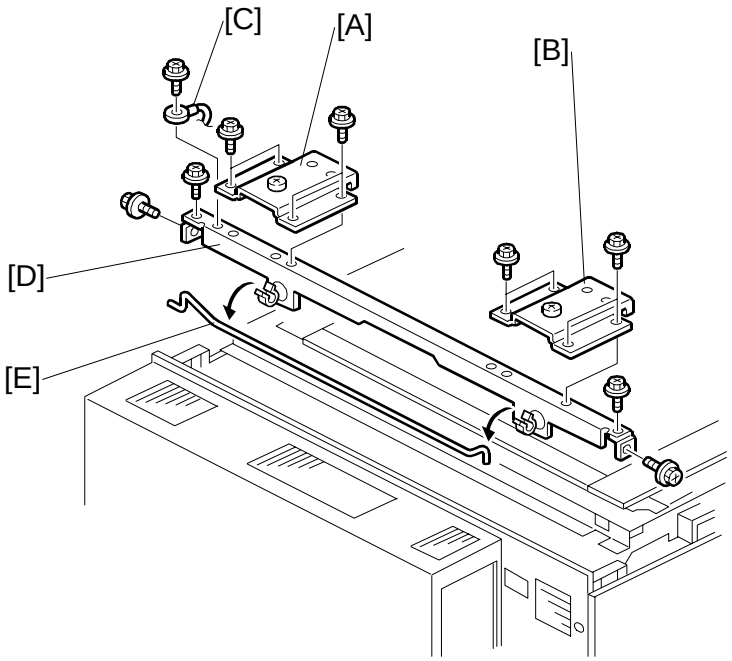

B132R001.WMF

Remove:

[A]: Right plate (☞ x4)
[B]: Left plate (☞ x4)
[C]: Ground wire (☞ x1)
[D]: Cross piece (☞ x4)
[E]: Detach the support rod from the rubber clamps.

Next, do the following:

[F]: Raise the scanner unit. (☞ x 2)
[G]: Set the support rod at the base ① then under the front, right corner ② of the scanner unit.

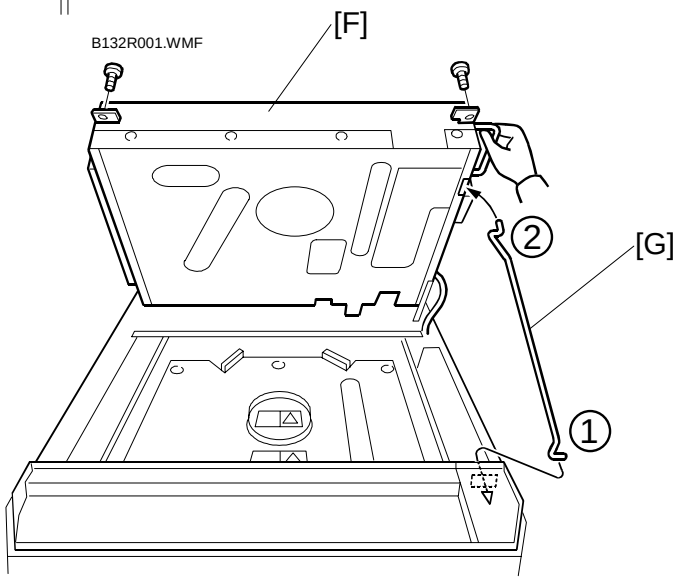

B132R002.WMF

⚠CAUTION

The scanner unit is very heavy. Never remove the support rod during servicing.

Reinstallation

- Be sure to reconnect ground wire [C].

Downloaded from www.Manualslib.com manuals search engine

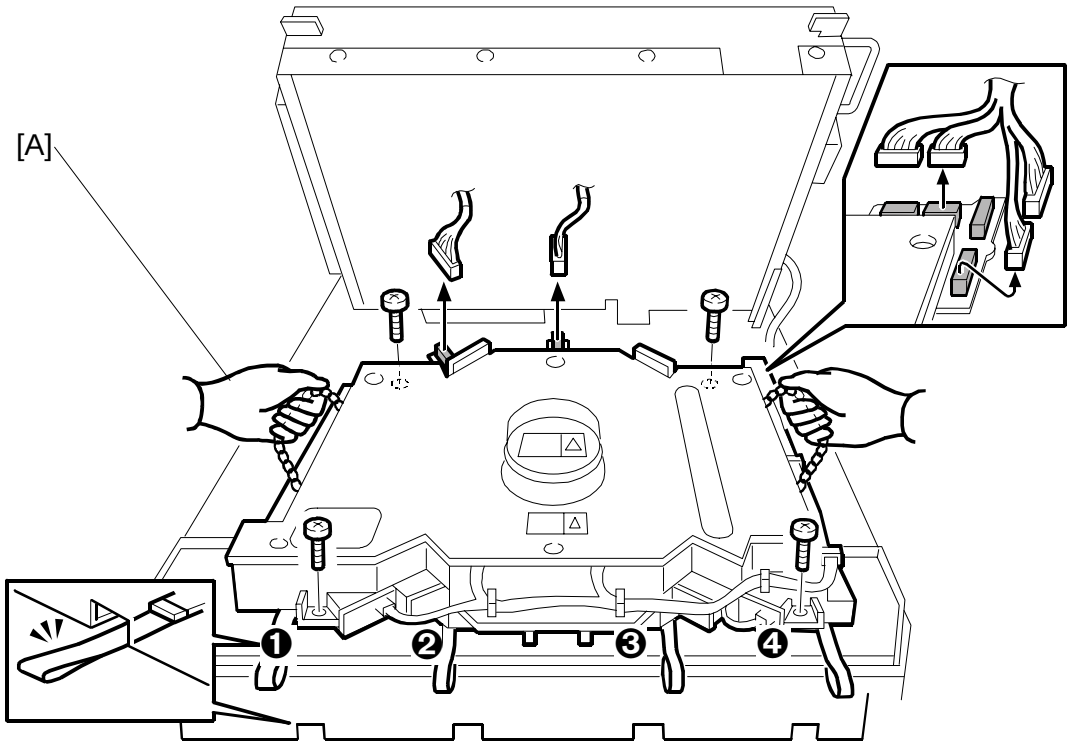

B132R003.WMF

Remove:

[A]: Laser unit (x4, x6)

NOTE: The laser unit includes four LD sub units. However, the LD sub units cannot be replaced separately because factory adjustment is required.

Reinstallation

- Make sure that the four tapes ❶, ❷, ❸, ❹ are set correctly in the holes.
- Be sure to reconnect the ground wire ([C] on the previous page).

Downloaded from www.Manualslib.com manuals search engine

Adjustments After Laser Unit Replacement

SP Adjustments

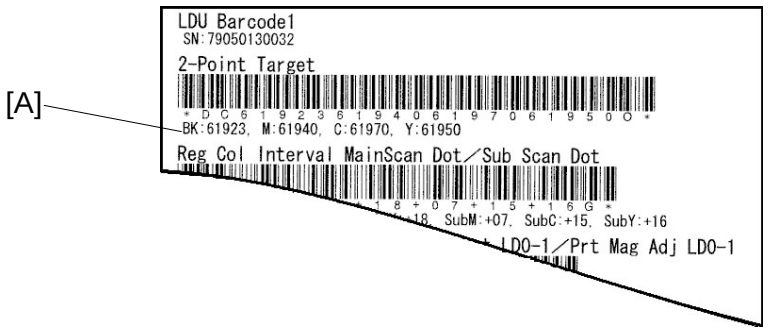

B132R904.WMF

1. SP codes are written on an A5 sheet provided with the laser unit. These SP codes must be done after the laser unit is replaced.
   - SP2154 001 (K)
   - SP2154 002 (M)
   - SP2154 003 (C)
   - SP2154 004 (Y)

   Only the settings shown with the first barcode [A] (2-Point Target) are necessary. The other information on the sheet can be ignored.

   NOTE: Enter the values printed on the A5 sheet. Do not enter the values shown in the sample above.

2. Make a test copy (☛3.19.4)

Color Registration Errors

- In addition to the SP adjustments printed on the seal attached to the LD unit, if color registration errors occur immediately after you change the laser unit, an additional adjustment is required.
- This additional adjustment is normally not required in the field. Do it only if you see color registration errors in test prints.
- See “Color Registration Test and Error Adjustment” in section 3.19.4 for instructions on how to do this adjustment.

Skew

- If skew occurs immediately after you change the laser unit, do the “Skew Adjustment” in section 3.19.5.

Downloaded from www.Manualslib.com manuals search engine

3.4.4 LASER SYNCHRONIZATION DETECTOR

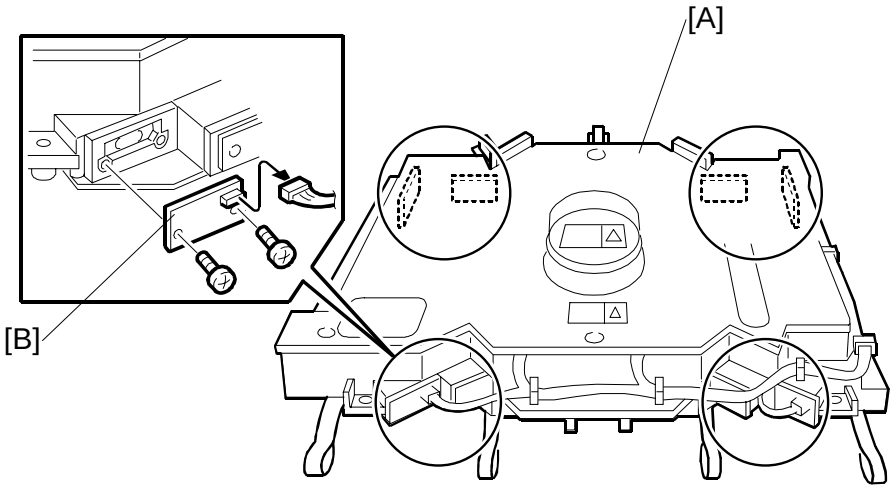

B132R004.WMF

Remove:

[A]: Laser unit (☛3.4.3)

[B]: Laser synchronization detector (x2, x1)

NOTE: In the figure above, note the locations of the 8 laser synchronization detectors (shown within the circles).

Downloaded from www.Manualslib.com manuals search engine

3.5 PCU (PHOTOCONDUCTOR UNITS)

3.5.1 DEVELOPER REPLACEMENT

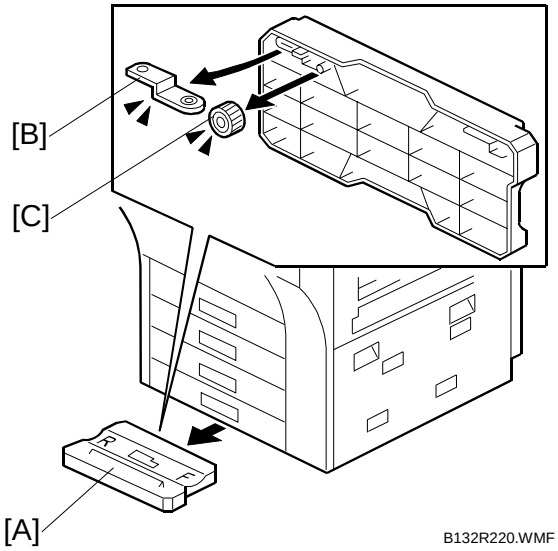

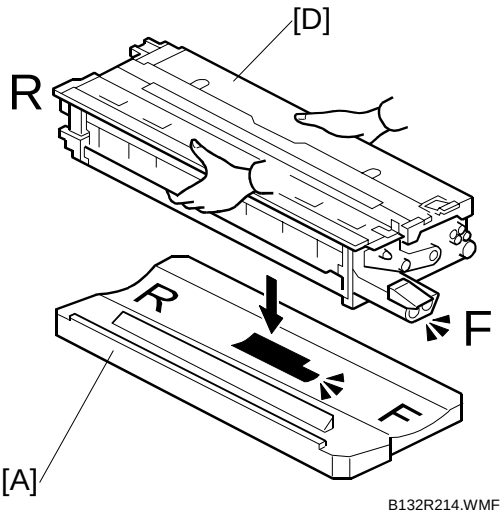

1. Spread some paper on a flat surface to hold developer that will be dumped from the development unit.
2. Remove the toner hopper and face plate. (☛3.2.7)
3. Remove the PCU stand [A] from bottom of the machine.
4. Remove the long special tool [B] and gear lock [C] from the bottom of the PCU stand.
5. Put the PCU stand [A] on a flat surface.
6. Remove the PCU. (☛3.2.7)
7. Position the front and rear of the PCU [D] so it matches the **F** (front) and **R** (rear) markings on the stand, then place the PCU on the stand.

   Important:

   - The front-rear alignment aligns the shape of the stand with the contours of the PCU bottom. This ensures that the exposed drum on the bottom of the PCU is completely protected during servicing.

Downloaded from www.Manualslib.com manuals search engine

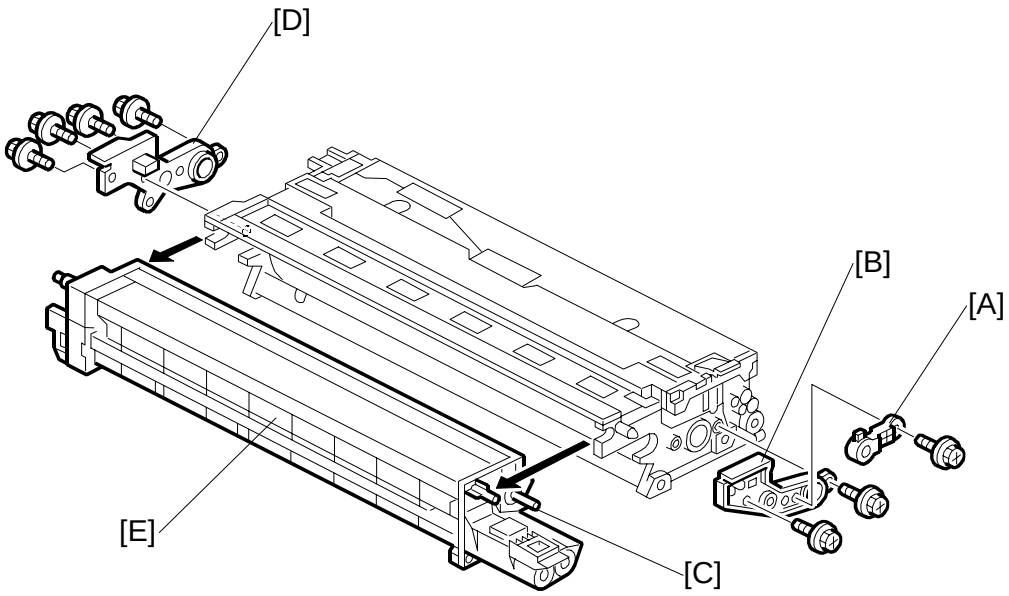

B132R210.WMF

8. Remove the drum (☛ 3.5.4). Cover it with a sheet of A3/DLT paper to protect it from light.
9. Vacuum inside the PCU.
   NOTE: Do not vacuum around the brush roller (in the PCU cleaning unit) and around the drum potential sensor.
10. On the front end of the PCU, remove the shaft cap [A] and lock plate [B] (☞ x 3).
    Important:
    - After you remove the shaft cap, never turn the shaft [C] of the development roller.
11. On the rear end of the PCU, remove the lock plate [D] (☞ x 4).
    NOTE: The long screws for the plates [A], [B], and [D] have washers.
12. Remove the development unit [E] from the PCU.

Downloaded from www.Manualslib.com manuals search engine

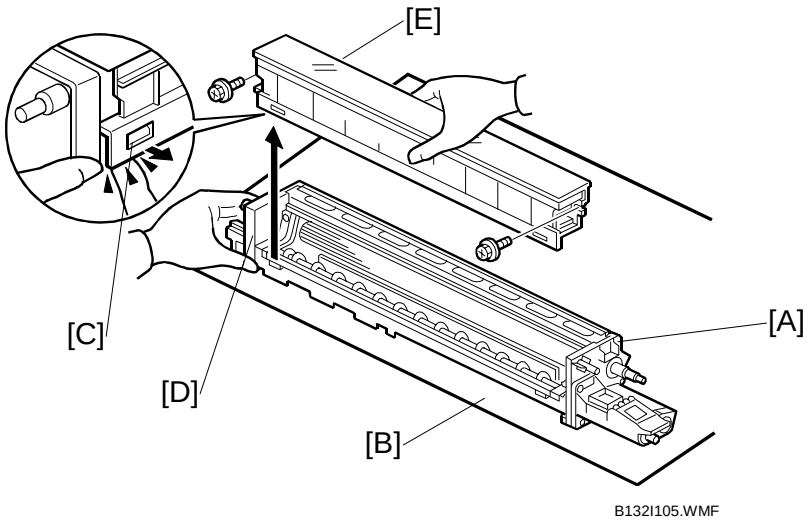

13. Place the development unit [A] on a clean sheet of A3/DLT paper [B].
14. With a fingernail release the tabs [C] on the left.
15. Hold the development unit steady with one hand [D] as you remove the old cartridge [E] from the development unit.

    Important:

    - The development unit is top heavy, and it tips easily. Be sure to steady it with one hand as you remove the old cartridge.
    - Discard the old cartridge. Please obey the local laws and regulations regarding the disposal of such items.
    - The screws removed from the cartridge do not have washers. (Do not confuse these screws for the plate screws that were removed in the previous step.)

Downloaded from www.Manualslib.com manuals search engine

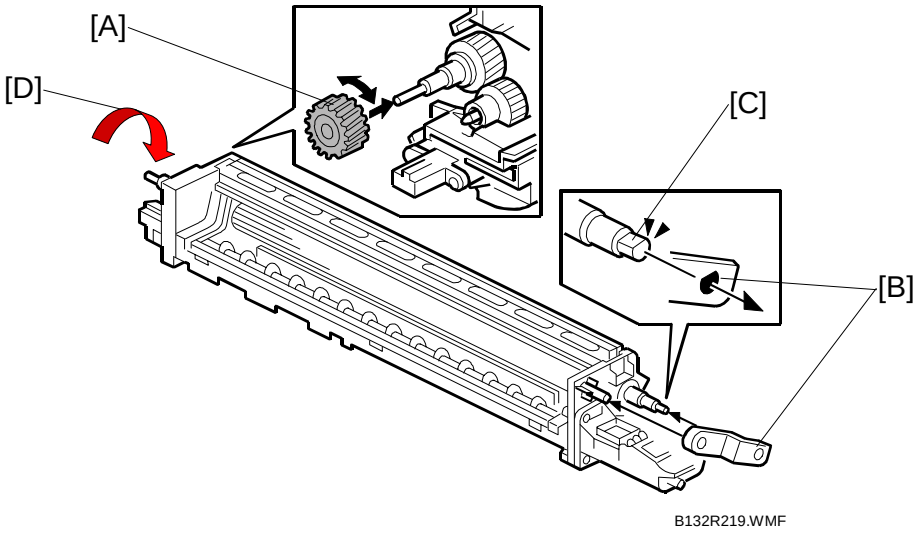

16. At the rear of the development unit, attach the lock gear [A] to the development roller shaft.
17. At the front, attach the long special tool [B].

    Important

    - The D-shaped hole of the long special tool [B] must fit over the D-shaped shaft tip [C].

18. If the hole of the special long tool and shaft are not aligned, rotate the D-shaped shaft tip [C] in the direction of the arrow [D] to position the shaft so the special long tool can be attached.

    Important

    - Always rotate the shaft in the direction of the arrow [D]. To avoid damaging the entrance seal, never rotate the lock gear in the opposite direction.

Downloaded from www.Manualslib.com manuals search engine

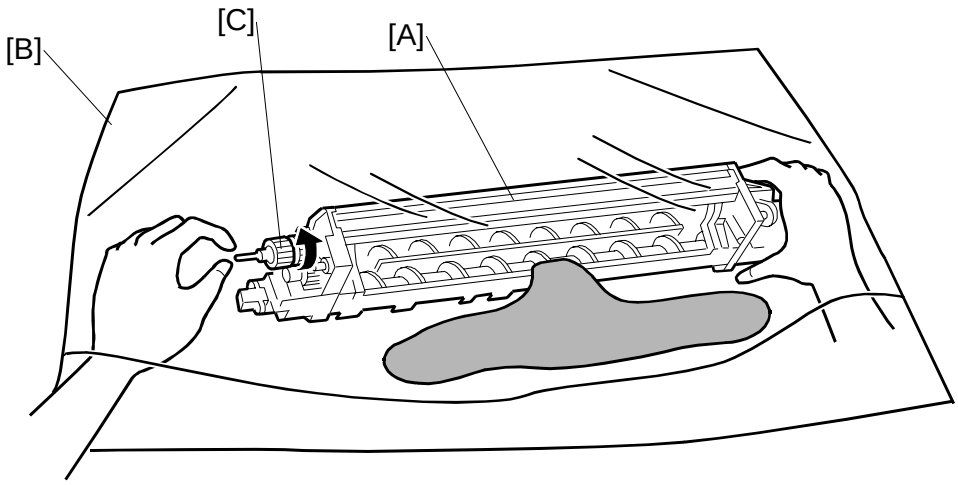

B132R218.WMF

19. Place the development unit [A] inside the disposal bag [B] provided.
20. Turn the development unit upside-down, then rotate the lock gear [C] in the direction of the arrow to dump the developer/toner into the bag.

    Important

    - Rotate the lock gear in the direction indicated by the arrow. To avoid damaging the entrance seal, do not rotate the lock gear in the opposite direction.

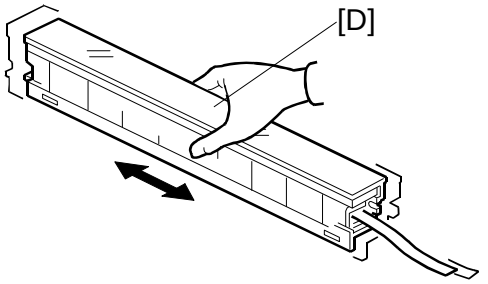

B132I105A.WMF

21. After dumping as much developer as possible, vacuum the remaining developer and toner.

    Important: **Be sure to vacuum completely, especially around the development roller.**

22. Remove the lock gear and long special long tool from the PCU.
23. Shake the new developer cartridge [D] from side to side about 6 times.

Downloaded from www.Manualslib.com manuals search engine

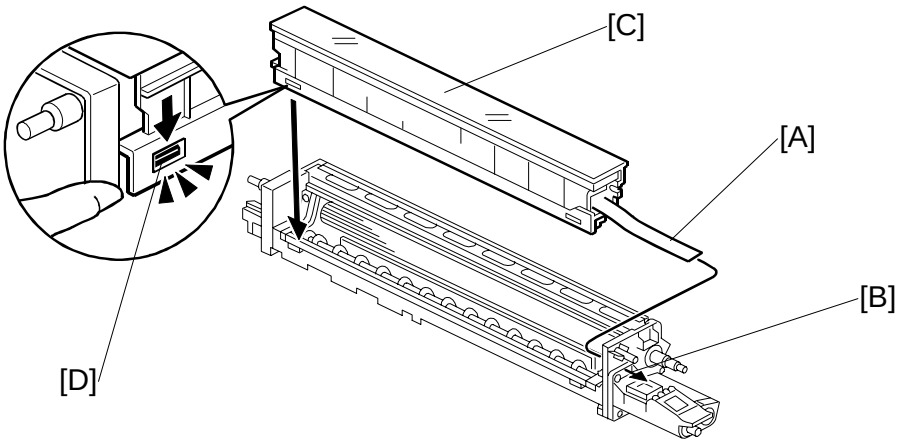

B132I106.WMF

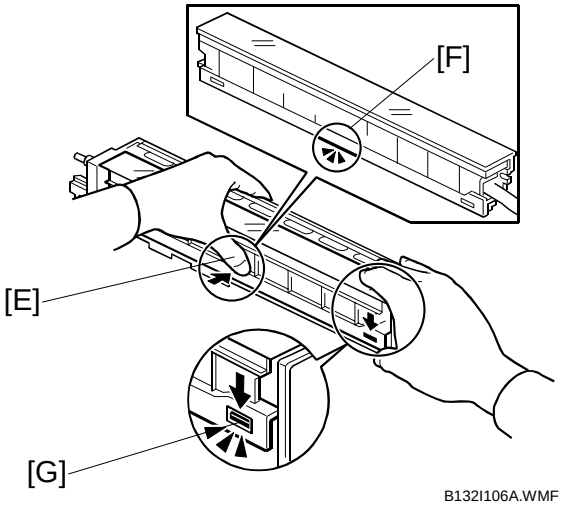

B132I106A.WMF

24. Thread the film seal [A] through hole [B].
25. Slide the developer cartridge down [C] on the left so the holes and tabs [D] are aligned.
26. Press in on the middle of the developer cartridge [E] to lock the tabs inside [F].
27. Press down on the left end [D] and right end [G] to lock the tabs.

Downloaded from www.Manualslib.com manuals search engine

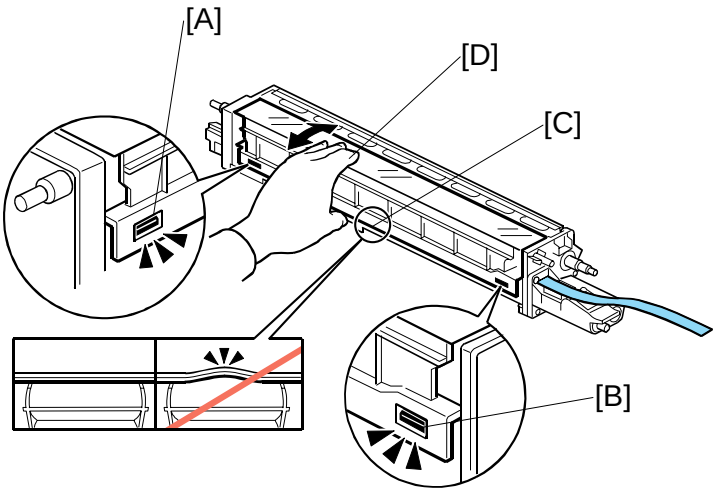

B132I106B.WMF

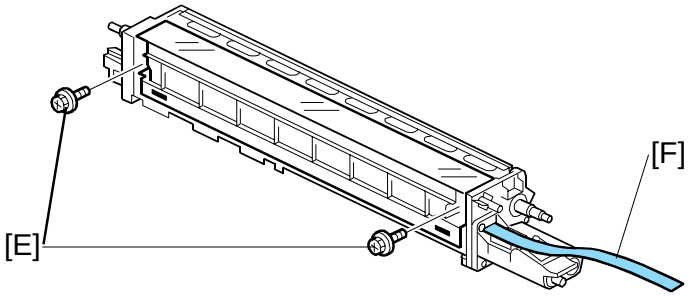

B132I106C.WMF

28. Check the following to points to be sure that the developer cartridge is set properly.
    - Tabs [A] and [B] should be locked.
    - The developer cartridge edge [C] should be flat and not bulging or floating away from the side of the development unit
    - Pull gently on the developer cartridge at [D] to make sure that it does not part from the development unit.
29. Attach the cartridge [E] (☞ x2).

    IMPORTANT: DO NOT REMOVE THE FILM SEAL [F] ON THE DEVELOPER CARTRIDGE AT THIS TIME.

Downloaded from www.Manualslib.com manuals search engine

30. Re-install the development unit in the PCU.
31. Reattach the small and large plate at the front and rear.
32. Push the PCU fully into the slot to reinstall it.
33. To release the developer in the PCU, pull out the film seal [A].

    NOTE: Place your other hand on the PCU [B] to steady it while you pull on the film seal.

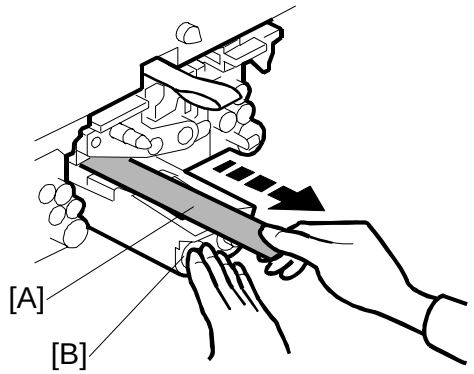

B132I101.WMF

Reinstallation

Important! YOU MUST DO SOME SPS, OR A FATAL ERROR WILL OCCUR. (☛3.5.7)

Downloaded from www.Manualslib.com manuals search engine

3.5.2 DEVELOPMENT GEARS

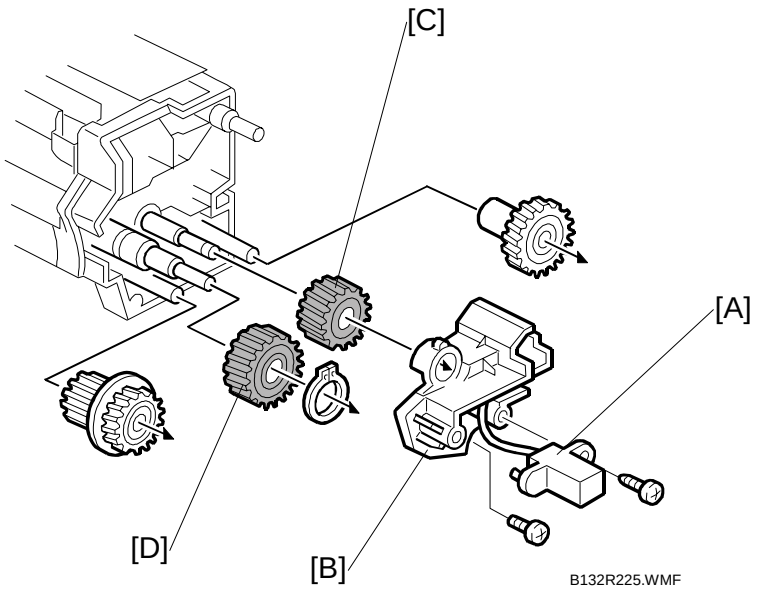

Remove:

- PCU (☛3.2.7)
- Development unit (☛3.5.1)

[A]: TD sensor connector (☞ x1; this is a tapping screw)
[B]: Development gear cover (☞ x1)
[C]: Development roller idle gear
[D]: Development roller gear (C-ring x1)

Downloaded from www.Manualslib.com manuals search engine

3.5.3 CHARGE ROLLER UNIT

Remove:

- PCU (☛3.2.7)

[A]: Charge roller unit (🔩 x2).

This unit contains the charge roller and charge roller cleaning roller

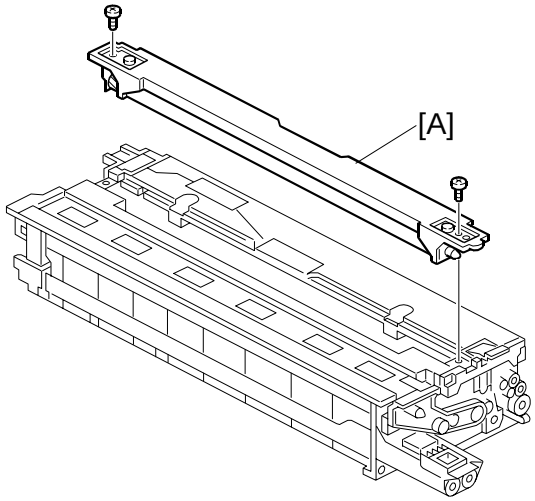

B132R203.WMF

[B]: Weight

NOTE: The weight must be used during the full service life of the machine. Be sure to reinstall it.

[C]: Lubricant bar

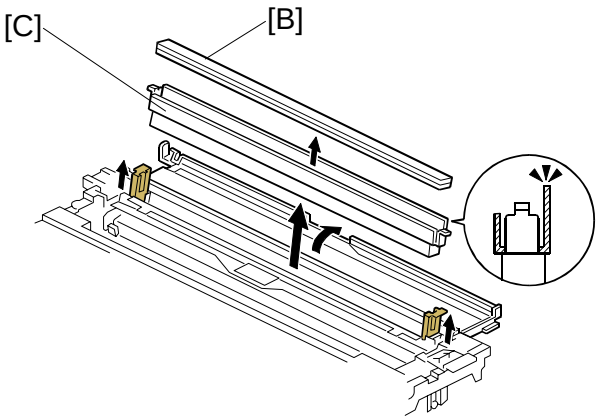

B132R224.WMF

Downloaded from www.Manualslib.com manuals search engine

3.5.4 DRUM AND CLEANING BLADE

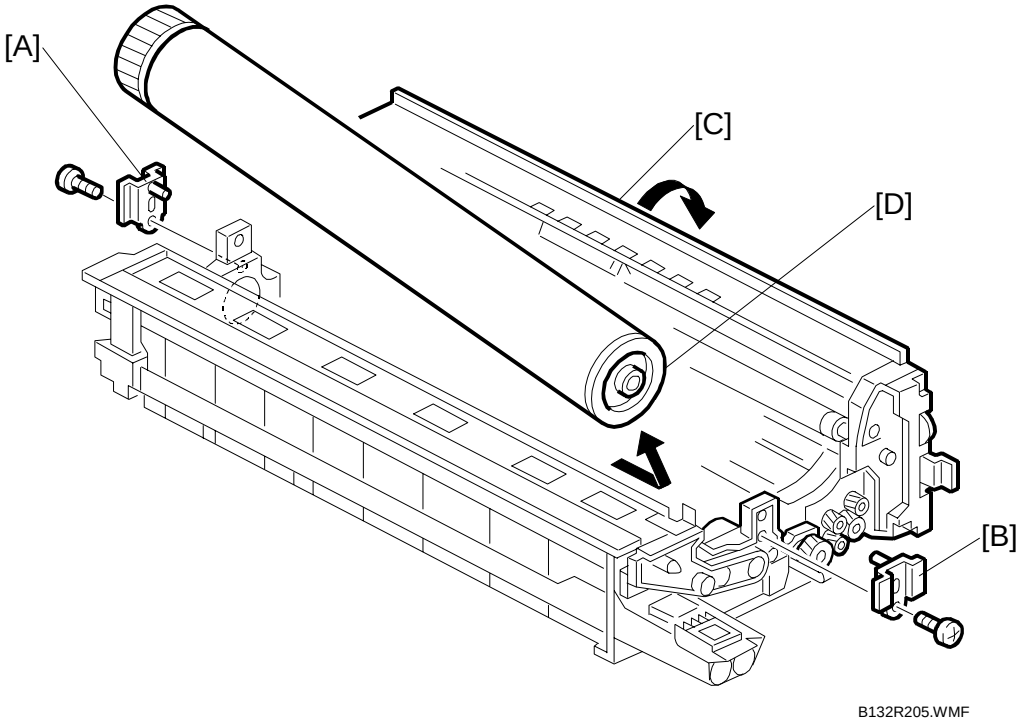

Removing the OPC Drum

Remove:

- PCU (☛3.2.7)
- Charge roller unit (☛3.5.3)

[A]: Rear bracket (☞ x1)
[B]: Front bracket (☞ x1)
[C]: Rotate the cleaning unit to the right 90 degrees.
[D]: OPC drum. Slide to the front to remove.

Important

- Set the removed OPC drum on a clean piece of paper and cover it to protect it from light.

Reinstallation

- Do the forced MUSIC adjustment with SP 2111 001 (☛ 3.19.4).

Downloaded from www.Manualslib.com manuals search engine

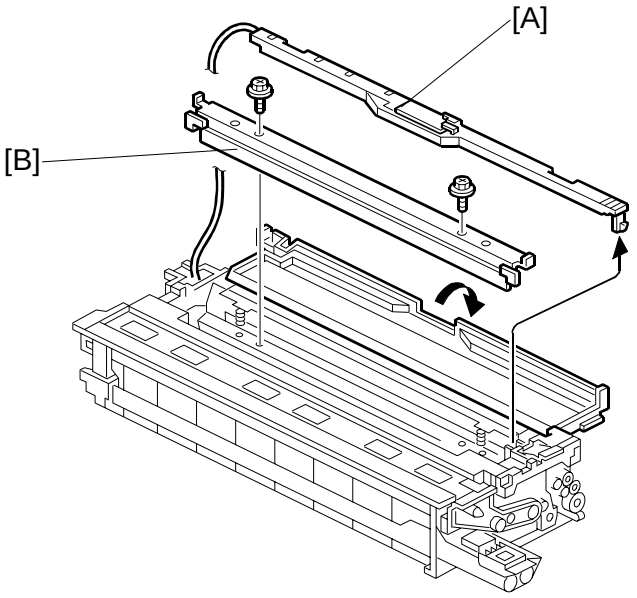

B132R206.WMF

Removing the Cleaning Blade

Remove:

- PCU (☛3.2.7)
- Charge roller unit (☛3.5.3)
- Drum (☛3.5.4)
- Open the upper cover of the cleaning unit 90 degrees to the right.

[A]: Bracket
[B]: Cleaning blade (x2)

Important

- After you replace the cleaning blade, always coat the drum with Lubricant Powder B1329700. (For more, see the next page.) This must be done even if the drum is not replaced.

Downloaded from www.Manualslib.com manuals search engine

Reinstallation of the drum

To prevent scouring a new drum when the machine is turned on, coat the new drum [A] with Lubricant Powder (B1329700) before you install it.

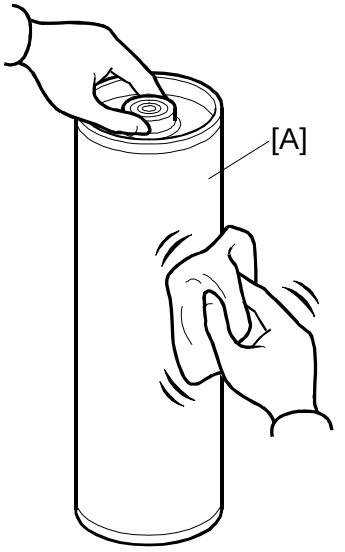

B023R960.WMF

Important

- **THE LUBRICANT POWDER (B1329700) (COMPOSED OF ZINC STEARATE) IS SPECIALLY DESIGNED FOR THIS MACHINE (e-STUDIO4500C/5500C).**
- **NEVER USE SETTING POWDER (54429101) FOR THIS MACHINE, OR YOU WILL DAMAGE THE DRUM CHARGE ROLLER AND CAUSE PROBLEMS WITH IMAGE QUALITY.**
- **YOU MUST DO SOME SPS, OR A FATAL ERROR WILL OCCUR. (☛3.5.7)**

Reinstallation

- Always reinstall the front end of the drum first.
- Never rotate the drum after reinstalling it.
- Always dust the drum before reinstallation after it was removed to replace or service other parts in the PCU.

If the Lubricant Powder (B1329700) is not available…

If the lubricant powder is not available, coat the drum with this model's Yellow toner.

Important

- **NEVER USE THE YELLOW TONER OF ANOTHER MODEL.**
- **NEVER USE TONER TAKEN FROM THE YELLOW PCU TONER SUPPLY PORT, BECAUSE THIS TONER HAS DEVELOPER MIXED WITH IT.**

To dust the drum with yellow toner:

1. Spread a small amount of fresh yellow toner on a clean sheet of paper.
2. Locate a clean, dry piece of cloth.
3. Touch the yellow toner with the surface of the cloth.
4. Dust the surface of the drum with the cloth until the entire surface is covered.

Downloaded from www.Manualslib.com manuals search engine

3.5.5 PCU CLEANING UNIT

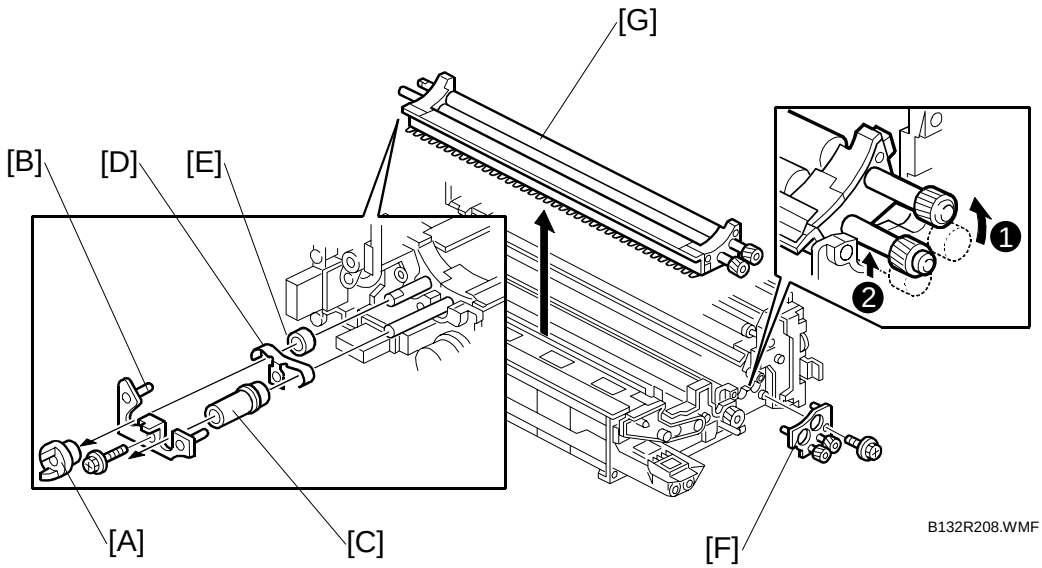

Remove:

- PCU (☛3.2.7)
- Charge roller unit (☛3.5.3)
- Drum (☛3.5.4)

[A]: PCU joint
[B]: Rear bracket (🔩 x1)
[C]: Long sleeve
[D]: Leaf spring
[E]: Short sleeve
[F]: Bracket and 2 gears (🔩 x1)
[G]: Cleaning unit

- When you remove the cleaning unit, the mylar can catch on the PCU frame and will scatter toner. To prevent this, rotate ❶ then lift ❷
- The cleaning unit contains these PM parts: lubricant brush, toner brush.

Downloaded from www.Manualslib.com manuals search engine

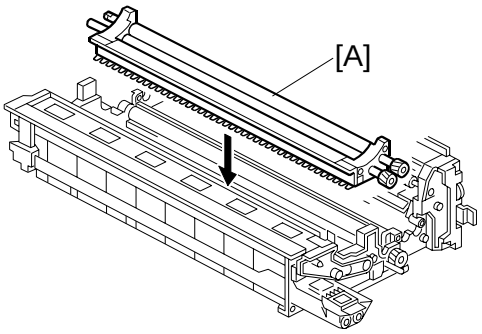

B132R208C.WMF

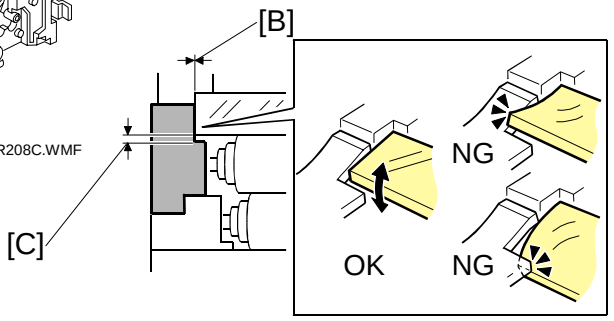

B132R208B.WMF

Reinstallation

1. Install the new cleaning unit [A] in the PCU.
2. Check the positions of the seals at the rear and front:
   - There must be no gap [B] between the edge of a seal and the edge of the cleaning blade.
   - There must be no overlap [C] at the edge of the seal and the edge of the cleaning blade.
   - Check that the cleaning blade does not catch on the edges of the seals as shown in the drawing at "OK".

Downloaded from www.Manualslib.com manuals search engine

3.5.6 TD SENSOR

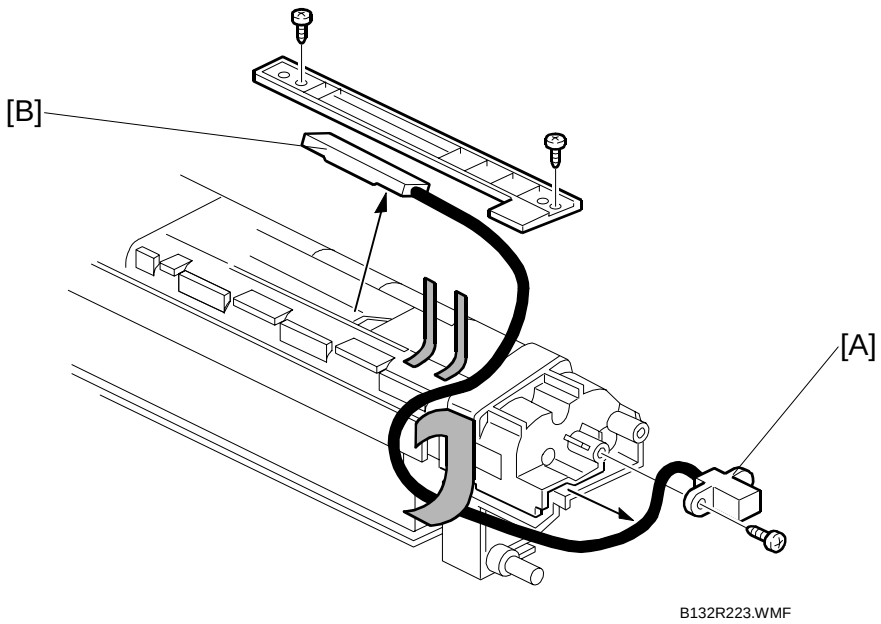

Remove:

- Open the front door.
- Remove the PCU from the machine. (☛3.2.7)

[A]: Connector bracket (☞ x1)
[B]: TD sensor (☞ x2)

Reinstallation

After replacing the TD sensor:

- Replace the developer in the PCU where the TD sensor was replaced. (☛3.5.1)
- Do **SP3801 001** - **006** only for the PCU where the TD sensor was replaced.

Downloaded from www.Manualslib.com manuals search engine

3.5.7 AFTER REPLACING THE PCU COMPONENTS AND DEVELOPER

Do the following procedure after you replace the PCU, development, or any related parts. Pay attention to the combination of replaced parts in the table below (require procedures are different). Any SPs described in this table should be performed according to the steps below.

1. Open the front door, then turn on the main power.
2. After the "Open Cover" message is shown on the display, close the front door.
3. Do the required SP.

No.	Combination of Replaced Parts				Required SPs After Replacement	Comments
	Drum	Developer	Drum Cleaning Blade	Drum Cleaning Brush		
1	✔				**SP3820 002** (Manual Procon)	Before reinstallation, cover the drum completely with Lubricant Powder. **Do NOT do these SPs which initialize the TD sensor:** • **SP3801 001** to **006** • **SP3811 001** to **006**
2	✔		✔			
3	✔			✔	**SP3810 001-005** (ClngInitSetExe) -and- **SP3820 002** (Manual Procon)	
4	✔		✔	✔		
5	✔	✔			**SP3801 001-006** (Init TD Sensor)	Before reinstallation, cover the drum completely with Lubricant Powder. Do these SPs to initialize the TD sensor only for the color(s) that were replaced.
6	✔	✔	✔		**SP3811 001-006** (Dev Setup Exe)	Before reinstallation, cover the drum completely with Lubricant Powder. Do these SPs to initialize the developer only for the color(s) that were replaced.
7	✔	✔	✔	✔		
8		✔			**SP3801 001-006** (Init TD Sensor)	Do these SPs to initialize the TD sensor only for the color(s) that were replaced.
9		✔	✔		**SP3811 001-006** (Dev Setup Exe)	Do these SPs to initialize the developer only for the color(s) that were replaced.
10		✔	✔	✔		

Downloaded from www.Manualslib.com manuals search engine

Important!

ONLY INITIALIZE THE TD SENSOR ONE TIME. DO NOT DO IT MORE THAN ONE TIME.

Only initialize the TD sensor at the following times:

- At installation, exactly as explained in the installation procedure.
- After you replace developer (only initialize the TD sensor for the color that you replaced)
- As instructed in specific troubleshooting procedures.
- If you do not obey these instructions, you will get toner scattering inside the machine.

Here is a summary of the important difference between **SP3801 001-006** (Init TD sensor) and **SP3811 001-006** (Dev Setup Exe):

- **SP3801 001-006** (Init TD sensor) only initializes the TD sensor.
- **SP3811 001-006** (Dev Setup Exe) initializes the TD sensor and sends toner to the sub hopper of each PCU. This covers the PCU drum with a layer of toner. Covering the drum with toner prevents the cleaning blades from scratching or bending the drums. **SP3811** is necessary only when both the developer and cleaning blade are replaced together. For the other procedures, if you send toner to the PCU, that toner is wasted.

Downloaded from www.Manualslib.com manuals search engine

3.6 TONER SUPPLY UNIT

3.6.1 STC PORT CLEANING

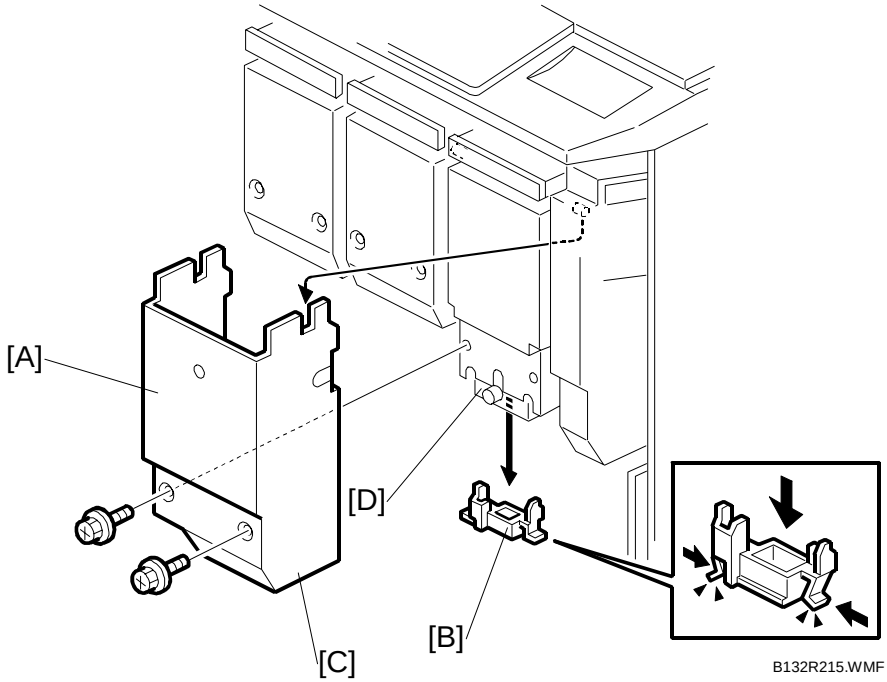

1. Open the front door.
2. Remove the STC holder front cover [A] (x2)
3. Remove the STC bottom cover [B] (Pawls x2)
4. Wrap a clean cloth around the tip of a small screwdriver then scrape away any toner that has collected inside the bottom holder front cover.
5. Use a clean cloth to clean the bottom of the holder front cover [C] and the bottom of the holder [D].

Downloaded from www.Manualslib.com manuals search engine

3.6.2 CONNECTOR BOARD (CNB)

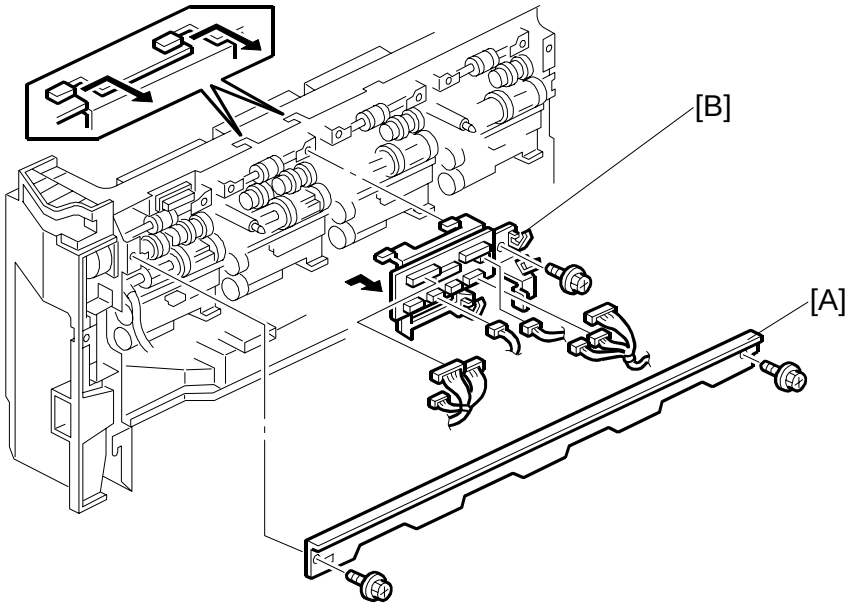

B132R216.WMF

Remove:

- Open the front door.
- Remove the toner hopper (☛3.2.7)

[A]: Support bracket (x2)

[B]: CNB (x8, x1). Slide the PCB assembly to the right and remove it.

Downloaded from www.Manualslib.com manuals search engine

3.6.3 TONER PUMP

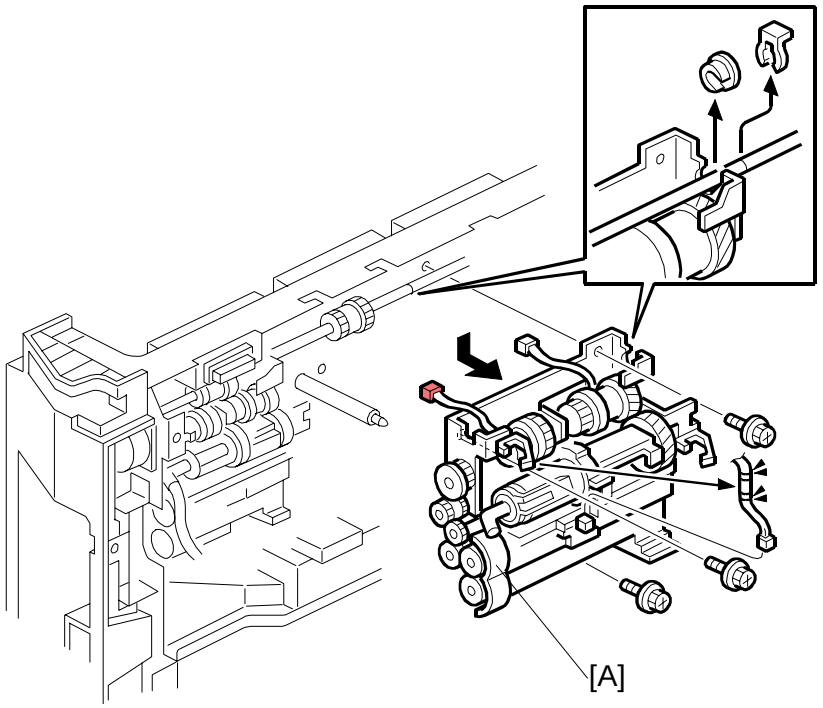

B132R217.WMF

Remove:

- Open the front door.
- Toner hopper (☛3.2.7)
- Support bracket (☛3.6.2)
- Connector Board (☛3.6.2)

[A]: Toner pump assembly (x3, x3, Bushing x1, x1).
Pull the assembly straight down and remove it.

Downloaded from www.Manualslib.com manuals search engine

3.6.4 TONER END SENSOR

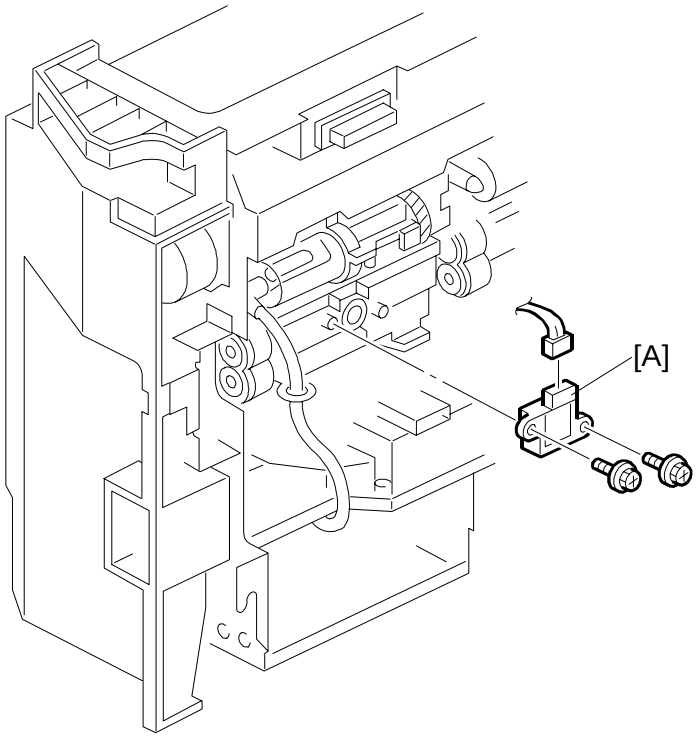

Remove:

- Open the front door.
- Toner hopper (☛3.2.7)

[A]: Toner end sensor (x1, x2)

Downloaded from www.Manualslib.com manuals search engine

3.6.5 TONER HOPPER MOTOR

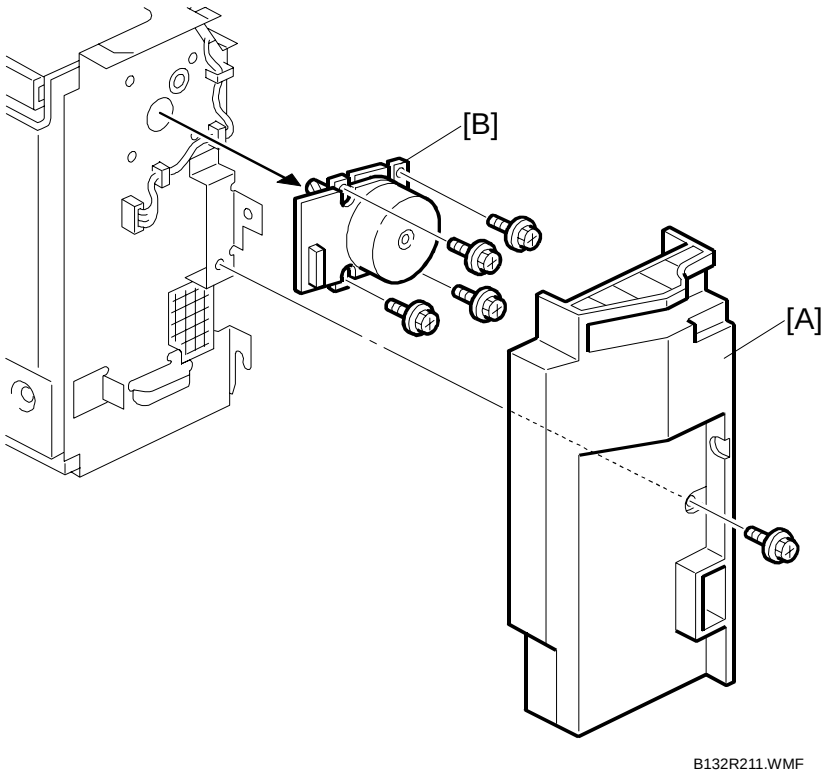

B132R211.WMF

Remove:

- Open the front door.
- Toner hopper (☛3.2.7)

[A]: Motor cover (☞ x1)
[B]: Toner hopper motor (☞ x4, ☜ x**1**)

Downloaded from www.Manualslib.com manuals search engine

3.7 PAPER TRANSFER UNIT

3.7.1 RELAY SENSOR

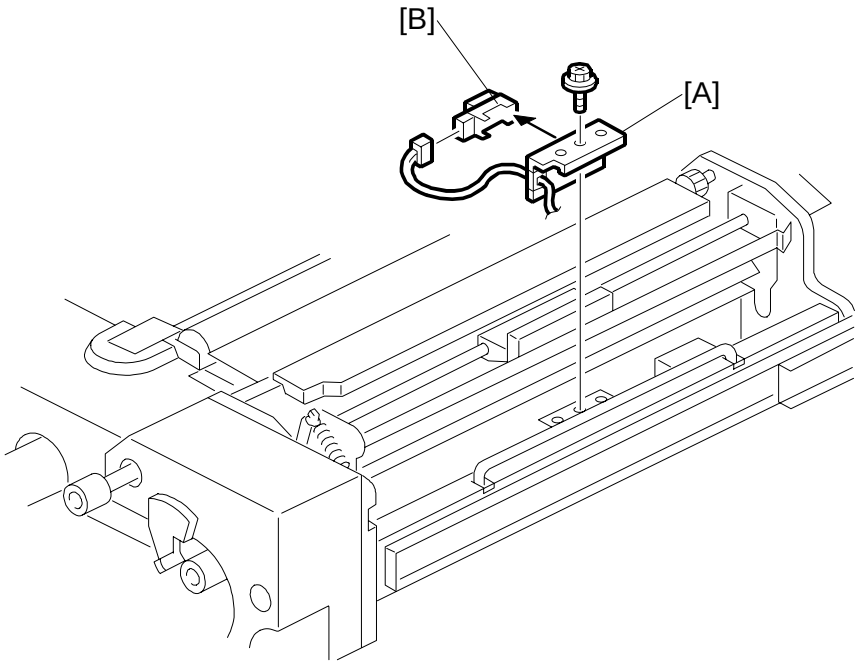

B132R615.WMF

Pull out the drawer unit. (☛3.2.9)

[A]: Sensor bracket (☞ x1)

[B]: Relay sensor (☞ x1)

Reinstallation

- Do the forced MUSIC adjustment with SP 2111 001 (☛ 3.19.4).

Downloaded from www.Manualslib.com manuals search engine

3.7.2 DOUBLE-FEED DETECTION SENSOR, REGISTRATION SENSOR

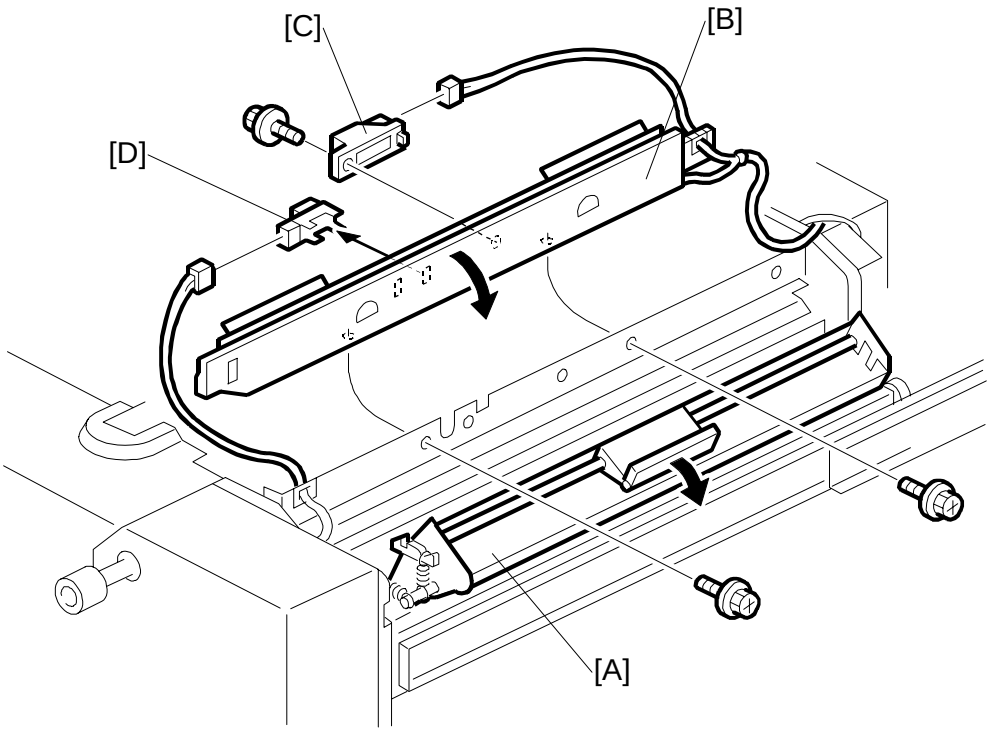

B132R616.WMF

- Pull out the drawer unit. (☛3.2.9)
- Open the guide plate [A].

Remove:

[B]: Sensor support plate (x2)
[C]: Double-feed detection sensor (x1, x1)
[D]: Registration sensor (x1)

Reinstallation

- Do the forced MUSIC adjustment with SP 2111 001 (☛ 3.19.4).

Downloaded from www.Manualslib.com manuals search engine

3.7.3 PAPER TRANSFER UNIT

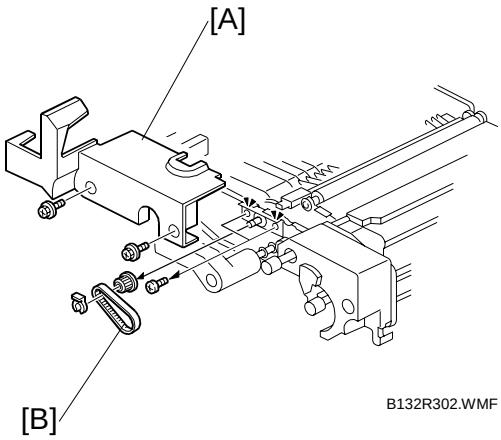

B132R302.WMF

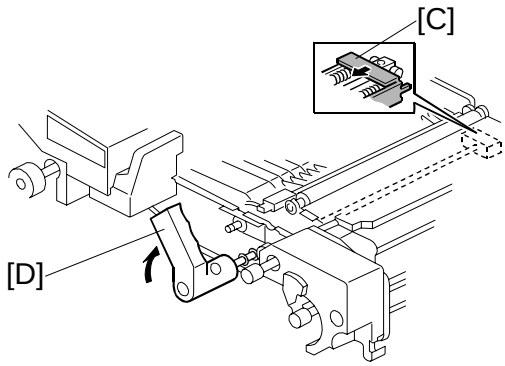

B132R302A.WMF

- Pull out the drawer unit. (☛3.2.9)

Remove:

[A]: Paper transport unit cover (x2)
[B]: Timing belt, gear (x1)
NOTE: Do not loosen or remove the paint-locked screws.
[C]: Press the release forward
[D]: Raise the handle to the vertical position.

Downloaded from www.Manualslib.com manuals search engine

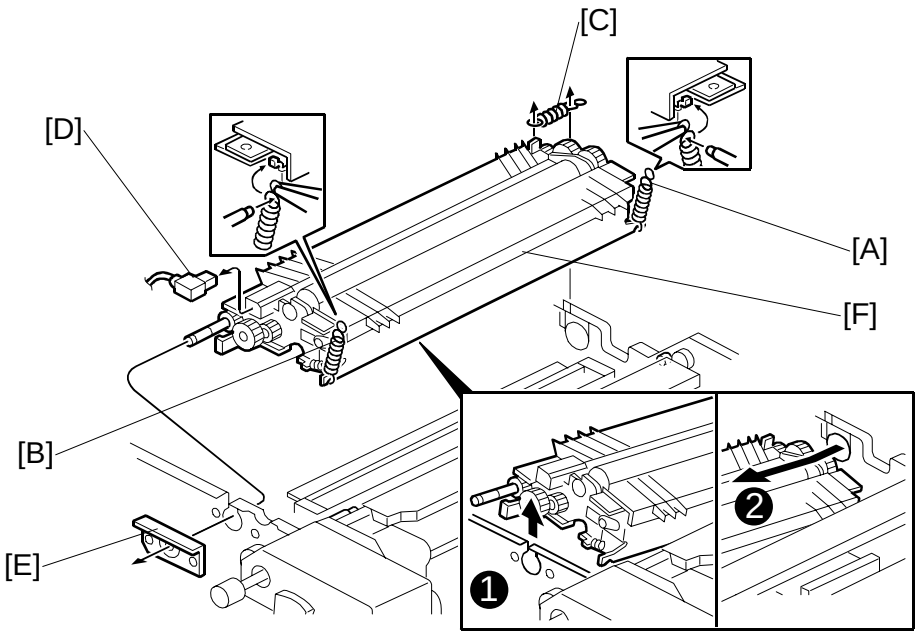

B132R303.WMF

Change the position of:

[A]: Spring
[B]: Spring

Remove:

[C]: Spring
[D]: Connector (x1) (use a pair of small pliers to remove the connector)
[E]: Bracket (x2)
[F]: Paper transfer unit (PTR unit)

- The handle should be up.
- Raise the front ❶.
- Pull the rear ❷

Reinstallation

- Be sure to set springs [A], [B], and [C] in their original positions before you re-install the PTR unit.
- Do the forced MUSIC adjustment with SP 2111 001 (☛ 3.19.4).

Downloaded from www.Manualslib.com manuals search engine

3.7.4 PAPER TRANSFER ROLLER, PAPER DISCHARGE PLATE

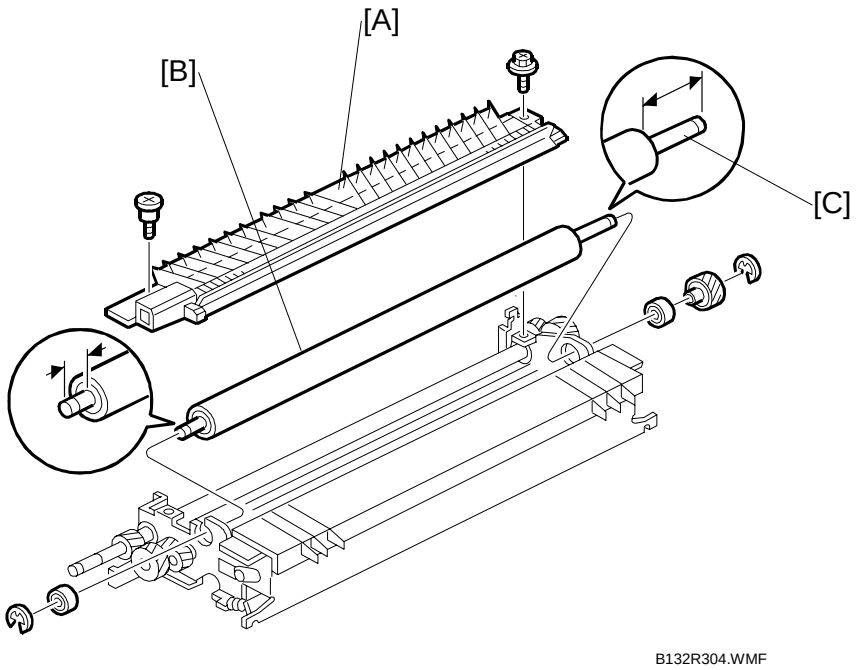

Remove:

- Paper transfer unit (☛3.7.3)

[A]: Paper discharge plate (🔩 x2)
[B]: Paper transfer roller (ℂ x2, Gear x1, Shaft bearings x2)

Reinstallation

- When you install the roller, the long end [C] is at the rear.
- Do the forced MUSIC adjustment with SP 2111 001 (☛ 3.19.4).

Downloaded from www.Manualslib.com manuals search engine

3.7.5 LUBRICANT BAR

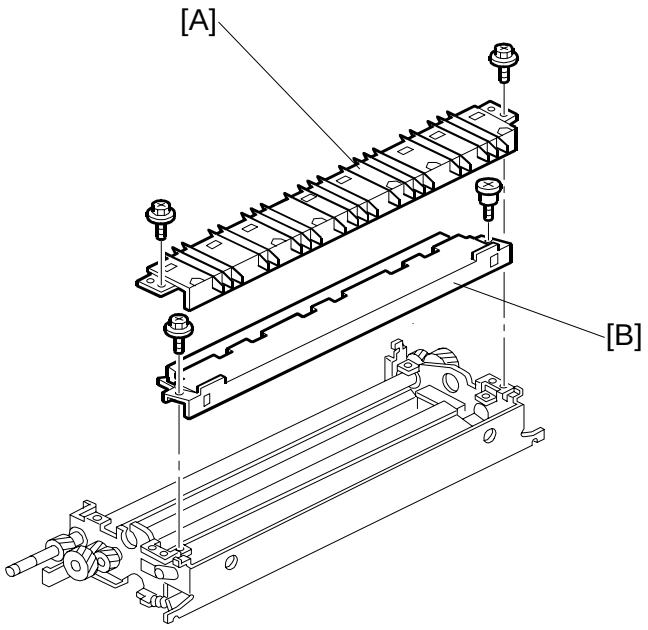

B132R305.WMF

Remove:

- Paper transfer unit (☛3.7.3)

[A]: Entrance guide plate (🔩 x2)
[B]: Lubrication bar (🔩 x2)

Important! Work carefully to avoid scratching the paper transfer roller.

Reinstallation

- Do the forced MUSIC adjustment with SP 2111 001 (☛ 3.19.4).

Downloaded from www.Manualslib.com manuals search engine

3.7.6 CLEANING BLADE

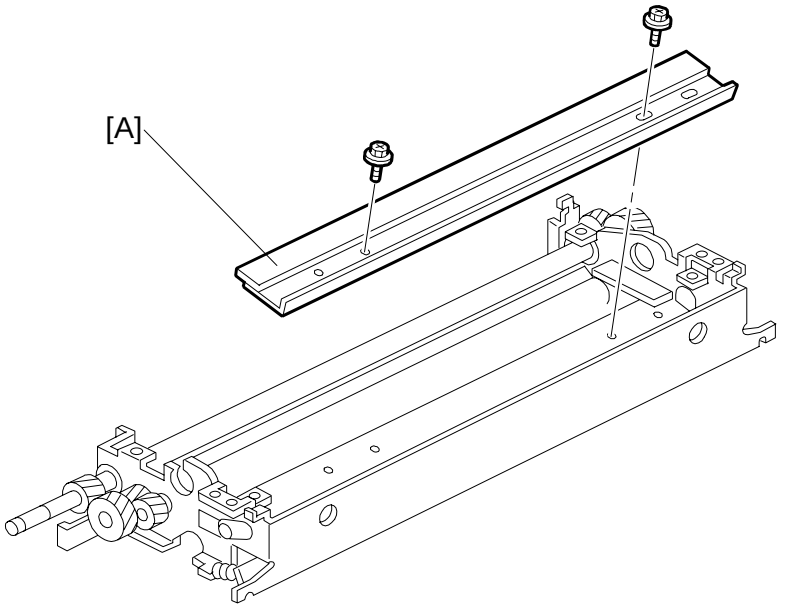

B132R306.WMF

Remove:

- Paper transfer unit (☛3.7.3)
- Lubrication bar (☛3.7.5)

[A]: Cleaning blade (☞ x2)

Reinstallation

- Do the forced MUSIC adjustment with SP 2111 001 (☛ 3.19.4).

Downloaded from www.Manualslib.com manuals search engine

3.7.7 PTR CLEANING BRUSH ROLLER

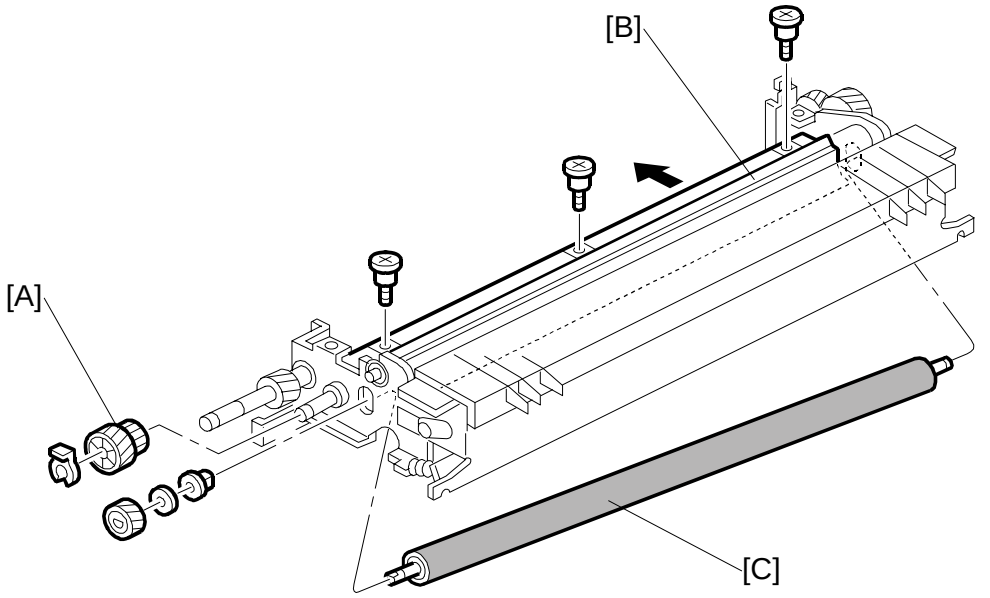

B132R307.WMF

Remove:

- Paper transfer unit (☛3.7.3)
- Transfer exit guide, paper transfer roller (☛3.7.4)

[A]: Gear (x1)
[B]: Brush roller cover (x3)
[C]: PTR cleaning brush roller (Gear x1, Washer x1, Shaft bearing x1)

Reinstallation

- Do the forced MUSIC adjustment with SP 2111 001 (☛ 3.19.4).

Downloaded from www.Manualslib.com manuals search engine

3.7.8 PAPER TRANSPORT BELT, SEPARATION POWER PACK

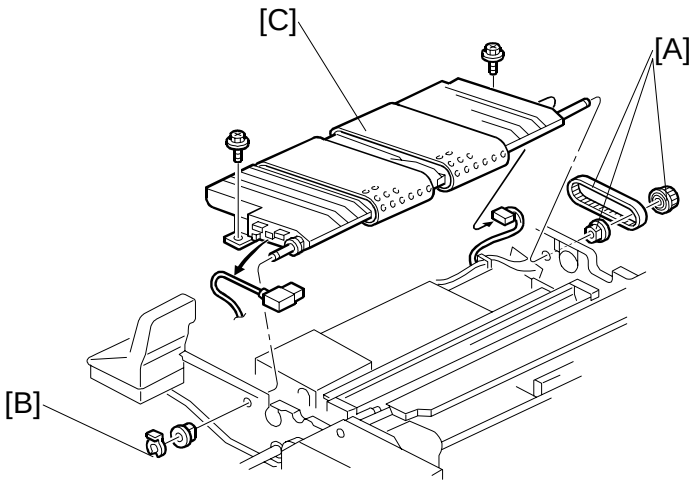

B132R308.WMF

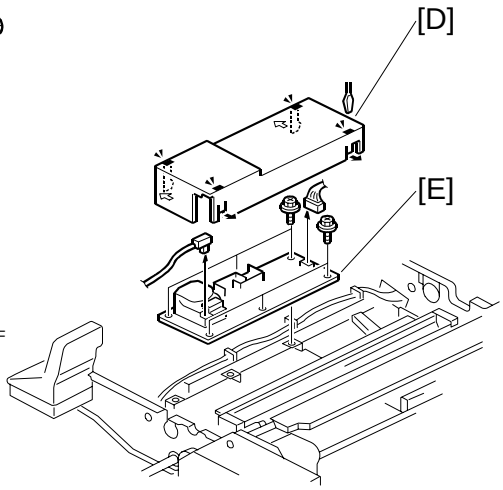

B132R308A.WMF

- Pull out the drawer unit (☛3.2.9)

Remove:

- Paper transport unit lever and cover (☛3.7.3)
- Fusing unit (☛3.9.2)

[A]: Timing belt x1, Gear x1, Shaft bearing x1
[B]: Clip ring x1, Shaft bearing
[C]: Paper transport belt (🔩 x2, 🖐 x2)
[D]: Cover
[E]: Separation power pack (🔩 x6, 🖐 x2)

Reinstallation

- Do the forced MUSIC adjustment with SP 2111 001 (☛ 3.19.4).

Downloaded from www.Manualslib.com manuals search engine

3.7.9 REGISTRATION MOTOR

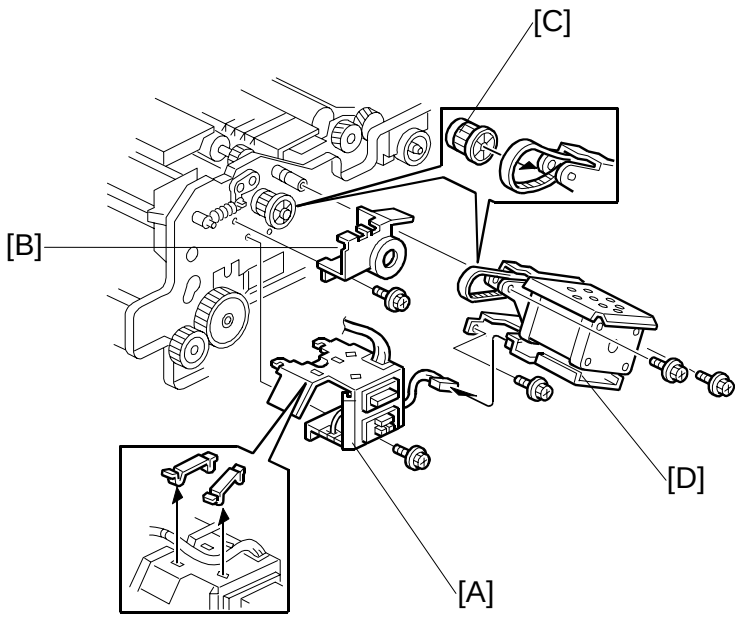

B132R618.WMF

Remove:

- Drawer unit (☛3.2.9)

[A]: Drawer unit connector bracket (x1, x3, x2)
[B]: Gear cover (x1)
[C]: Registration gear (x1, Spring pin x1)
[D]: Registration motor assembly (x3, x1)

Reinstallation

- Do the forced MUSIC adjustment with SP 2111 001 (☛ 3.19.4).

Downloaded from www.Manualslib.com manuals search engine

3.7.10 DOUBLE-FEED DETECTION LED

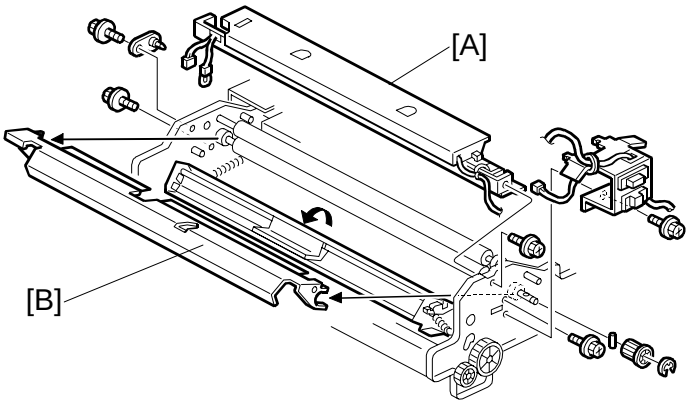

B132R619.WMF

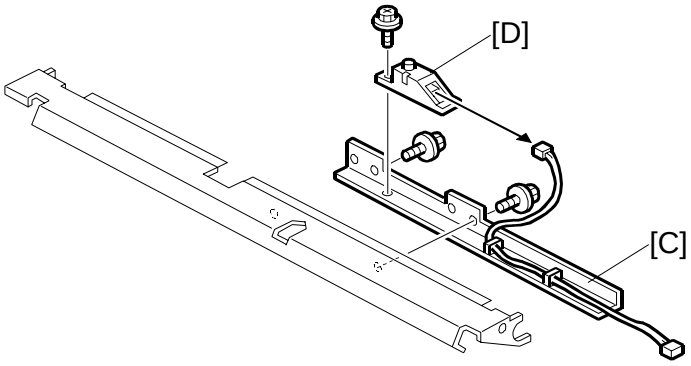

B132R620.WMF

Remove:

- Drawer unit (☛3.2.9)
- Drawer unit connector bracket (☛3.7.9)
- Registration motor assembly (☛3.7.9)
- Sensor support plate (☛3.7.2)

[A]: Upper stay (x2, x1, Gear x 1, Pin x1)
[B]: Lower stay (x2, x1)
[C]: Sensor bracket (x2)
[D]: Double-feed detection LED (x1, x1)

Reinstallation

- Do the forced MUSIC adjustment with SP 2111 001 (☛ 3.19.4).

Downloaded from www.Manualslib.com manuals search engine

3.8 IMAGE TRANSFER UNIT

3.8.1 ITB (Image Transfer Belt), BELT CLEANING UNIT

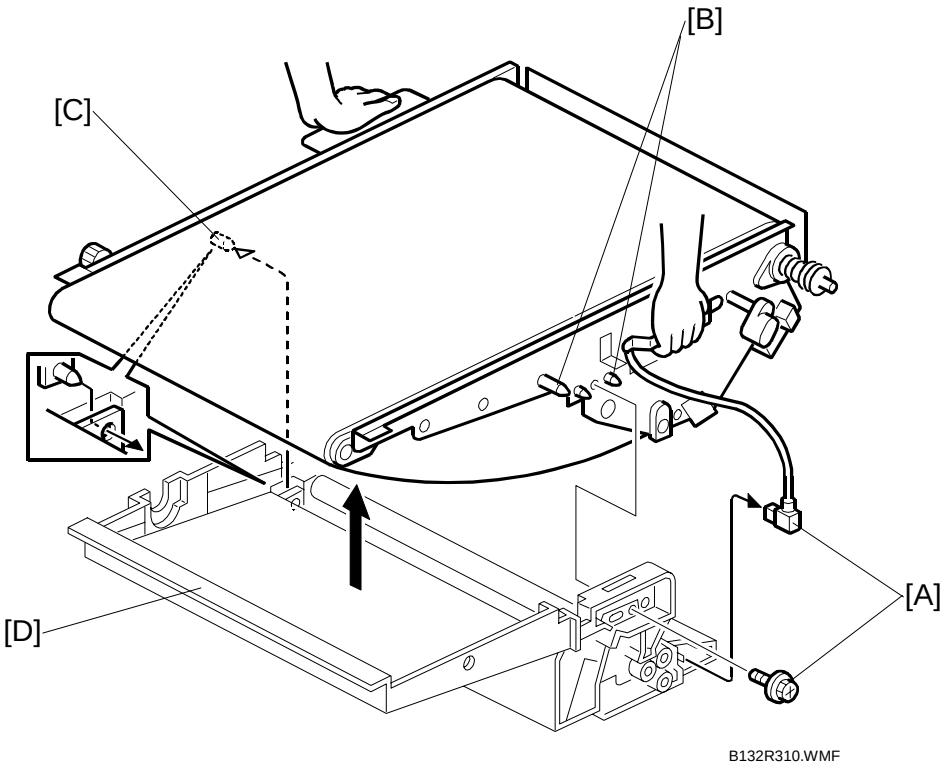

Disassembly and ITB Replacement

1. Put a clean sheet of paper on a flat surface.
2. Remove the image transfer unit from the machine (☛3.2.8). Put the image transfer unit on the sheet of paper.
   NOTE: Keep the unit flat when you remove it, lift it, carry it, and put it down. Otherwise, waste toner will spill out, and will spill inside the unit, and this can cause copying problems.
3. Disconnect the image transfer belt unit connector and screw [A] (x1, 1x)
4. Push the image transfer unit to the rear to disengage the front pins [B].
5. Pull the unit to the front to disengage the rear pin [C].
6. Lift the image transfer unit to separate it from the belt cleaning unit [D].

Downloaded from www.Manualslib.com manuals search engine

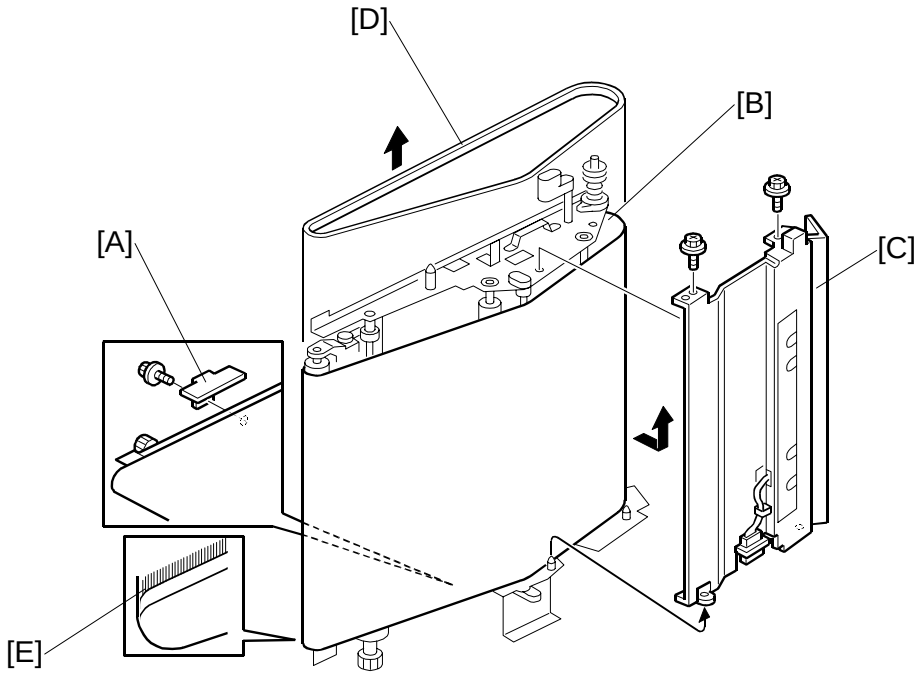

B132R314.WMF

Remove:

[A]: Encoder sensor bracket (x1)
[B]: Set the image transfer unit on its front side up.
[C]: ID sensor / MUSIC sensor plate (x2, x1)
[D]: ITB

Important

- When you install the new ITB, the edge of the belt with the encoder film strip must be at [E]. The encoder must be at the rear side.
- The encoder edge of the ITB is silver.
- Be sure to reattach the ID sensor / MUSIC sensor plate [C] before you reassemble the ITB (x2, x1).
- Make sure that the belt flange [F] does not touch the roller edge.

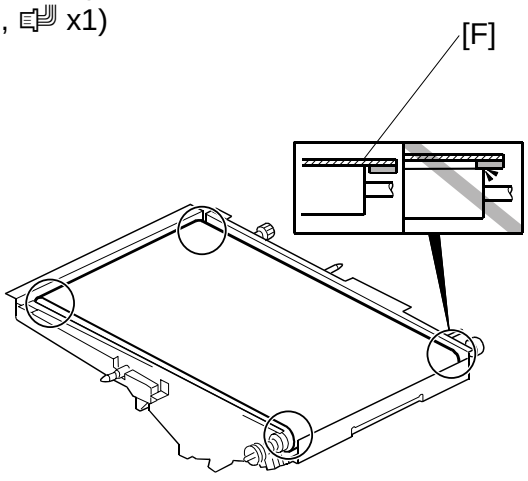

B132R317A.WMF

Downloaded from www.Manualslib.com manuals search engine

Reassembly of the Image Transfer Unit and Belt Cleaning Unit

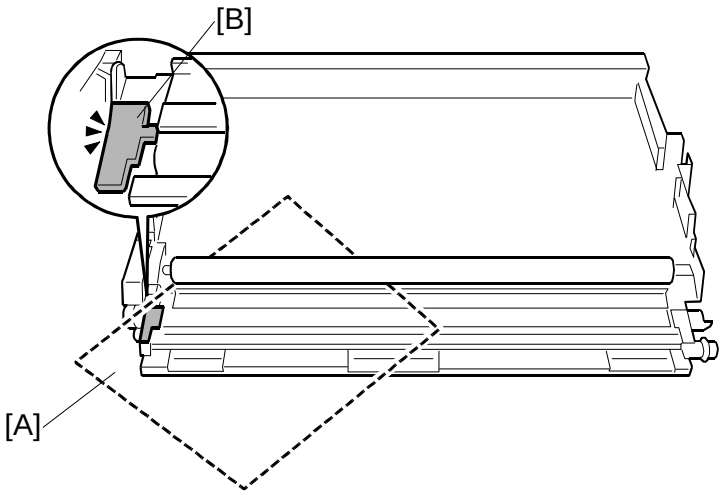

B132R315.WMF

1. Insert one sheet of A4/LT paper [A] at the corner as shown.
   NOTE: The paper protects the corner seal [B] of the belt cleaning unit.
2. Lower the belt unit [C] onto the cleaning unit [D].
3. Push the belt unit ❶ and belt cleaning unit ❷ together.
4. Connect the belt unit and belt cleaning unit (x1, x1).

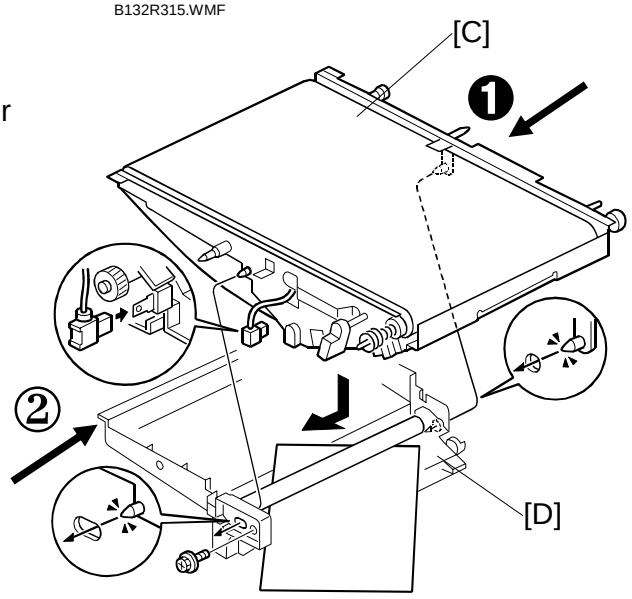

B132R316.WMF

Downloaded from www.Manualslib.com manuals search engine

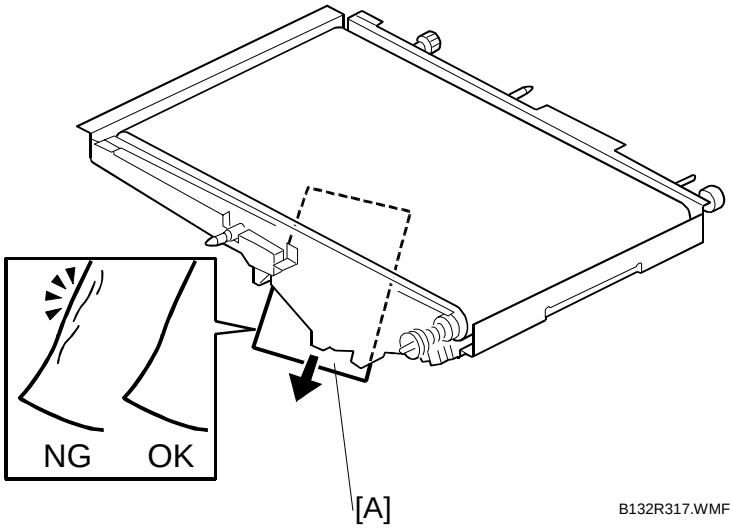

5. Pull out the paper [A] slowly.
6. Check the paper.
   If the paper is unmarked, go to the next step.
   -or-
   If the paper is creased or torn, separate the image transfer belt and cleaning unit. Inspect the seal. If the seal is damaged, replace it.

Downloaded from www.Manualslib.com manuals search engine

Dusting the ITB with Lubricant Powder

1. Get a pack of Lubricant Powder B1329700.

   Important!

   - **THE ITB MUST BE COATED WITH LUBRICANT POWDER (B1329700) BEFORE INSTALLING A NEW ITB.**
   - **THE LUBRICANT POWDER (B1329700) (COMPOSED OF ZINC STEARATE) IS SPECIALLY DESIGNED FOR THIS MACHINE (e-STUDIO4500c/5500c).**
   - **NEVER USE SETTING POWDER (54429101) FOR THIS MACHINE, OR YOU MAY DAMAGE THE DRUM CHARGE ROLLER AND CAUSE PROBLEMS WITH IMAGE QUALITY.**
   - **NEVER USE TONER TAKEN FROM THE TONER SUPPLY PORT OF THE YELLOW PCU BECAUSE THIS TONER HAS DEVELOPER MIXED WITH IT.**
   - **IF THE LUBRICANT POWDER (B1329700) IS NOT AVAILABLE, COAT THE ITB WITH THIS MACHINE'S YELLOW TONER. DO NOT USE ANOTHER MODEL'S YELLOW TONER.**

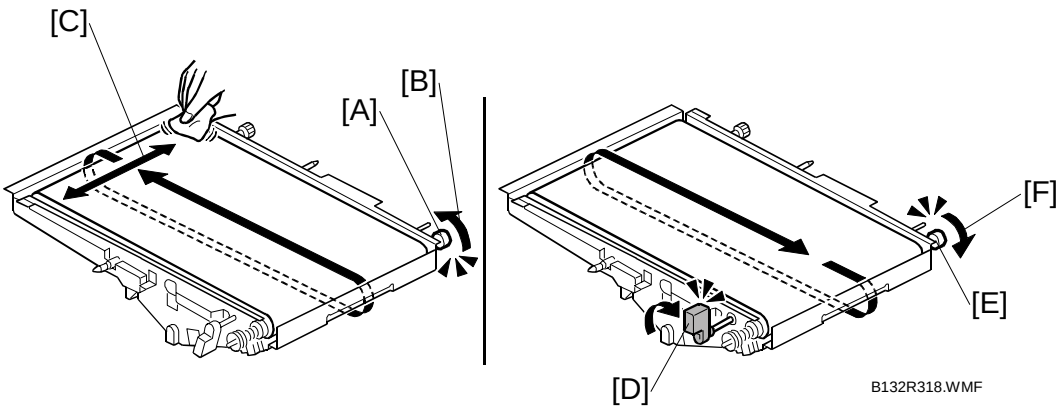

2. While rotating the knob [A] in the direction indicated by the arrow [B], apply Lubricant Powder (B1329700) at [C] with a soft dry cloth.
3. Rotate the ITB indicated by the arrow [B] through one full rotation. This allows the lubricant powder to be spread completely on the ITB.
4. Turn the lever [D] to the 'up' position.
5. After the ITB is completely covered with powder, rotate the knob [E] in the direction indicated by the arrow [F].

Downloaded from www.Manualslib.com manuals search engine

Important

- Be sure to apply powder until the ITB is completely covered.

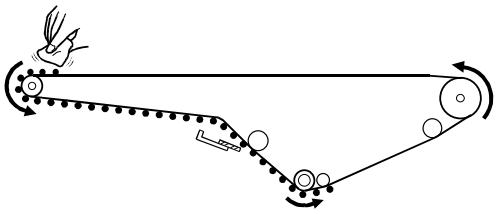

B132R319.WMF

- After covering the surface of the ITB with lubricant power, be sure to rotate the ITB through one full rotation in the opposite direction. This allows the cleaning blade edge [F] to be covered with sufficient lubricant powder.

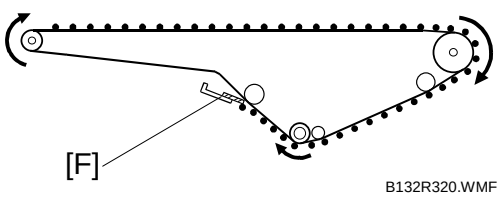

B132R320.WMF

Reinstallation

- Do the forced MUSIC adjustment with SP 2111 001 (☛ 3.19.4).

Downloaded from www.Manualslib.com manuals search engine

3.8.2 ITB CLEANING BLADE, DUST COLLECTION UNIT

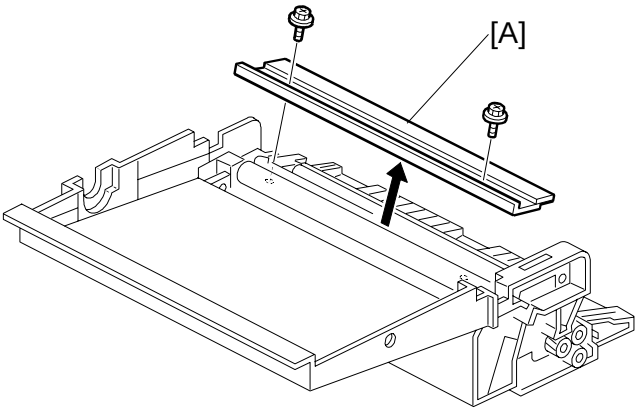

B132R311.WMF

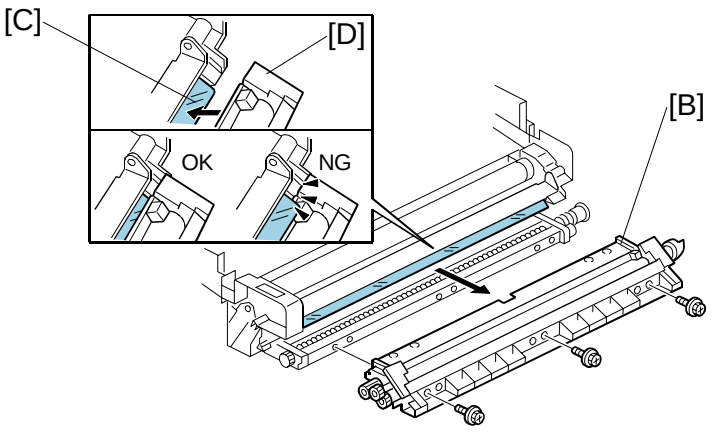

B132R312A.WMF

Remove:

- Image transfer unit (☛3.2.8)
- Belt cleaning unit (☛3.8.1)

[A]: ITB cleaning blade (☞ x2)
[B]: Dust collection unit (☞ x3)

Reinstallation

- After reinstallation of the dust collection unit, confirm that the seal [C] is covered by the bracket [D].
- Do the forced MUSIC adjustment with SP 2111 001 (☛ 3.19.4).

Downloaded from www.Manualslib.com manuals search engine

3.8.3 ITB CLEANING ROLLER, SCRAPER BLADE

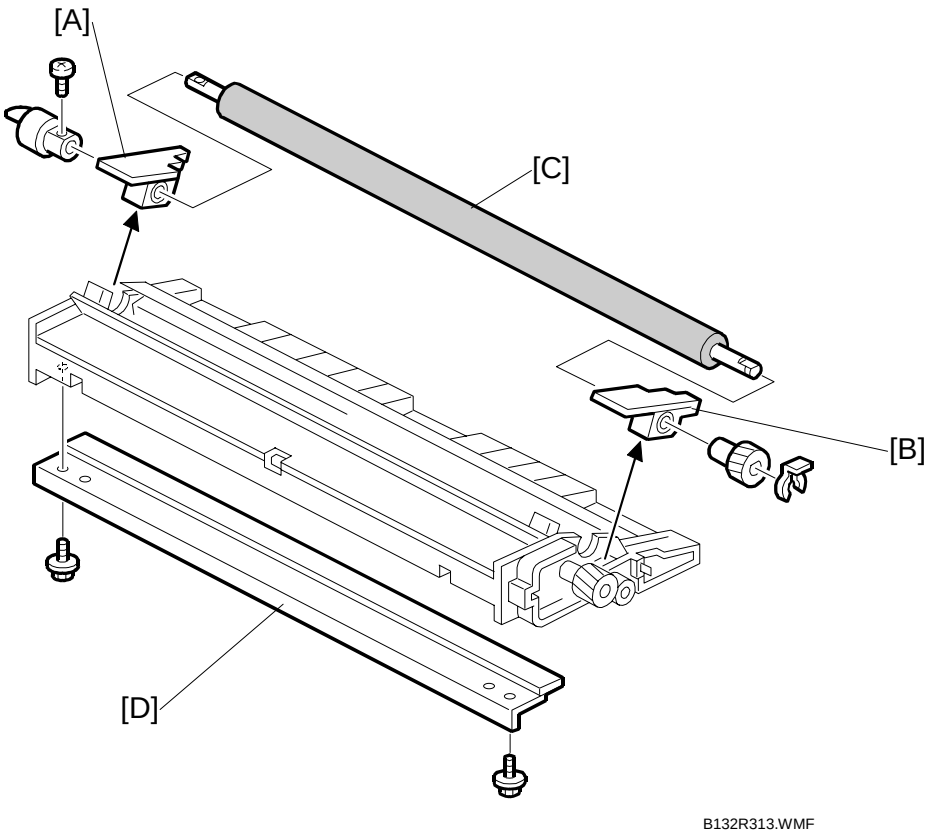

Remove:

- Image transfer unit, ITB cleaning unit (☛3.8.1)
- ITB cleaning blade, dust collection unit (☛3.8.2)

[A]: Rear bracket, coupling (☞ x1)
[B]: Front bracket (☞ x1, Gear x1)
[C]: ITB cleaning roller
[D]: ITB cleaning scraper blade (☞ x2)

Reinstallation

- Do the forced MUSIC adjustment with SP 2111 001 (☛ 3.19.4).

Downloaded from www.Manualslib.com manuals search engine

3.8.4 MUSIC AND ID SENSORS

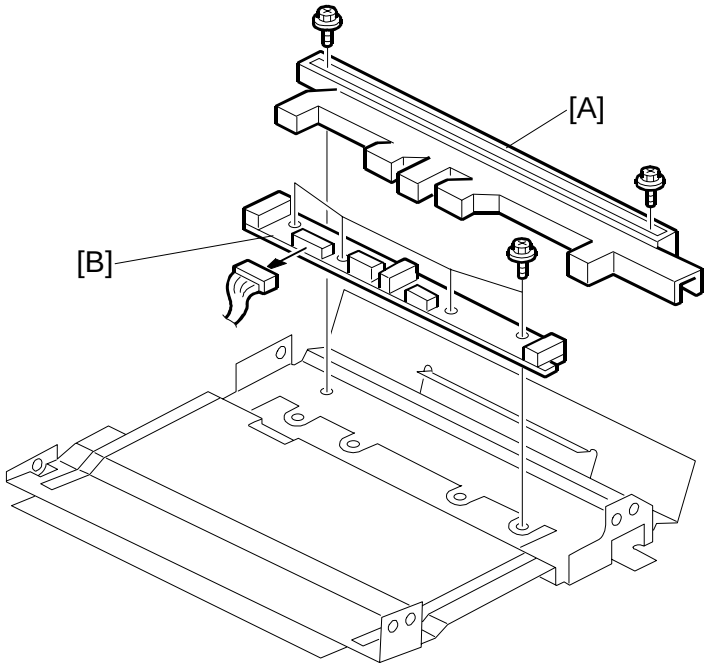

B132R332.WMF

Remove the ID sensor/music sensor plate (☛3.8.1)

[A]: Cover (x2)

[B]: Music and ID sensors (x4, x1)

Reinstallation

- Do the forced MUSIC adjustment with SP 2111 001 (☛ 3.19.4).

Downloaded from www.Manualslib.com manuals search engine

3.8.5 IMAGE TRANSFER POWER PACK

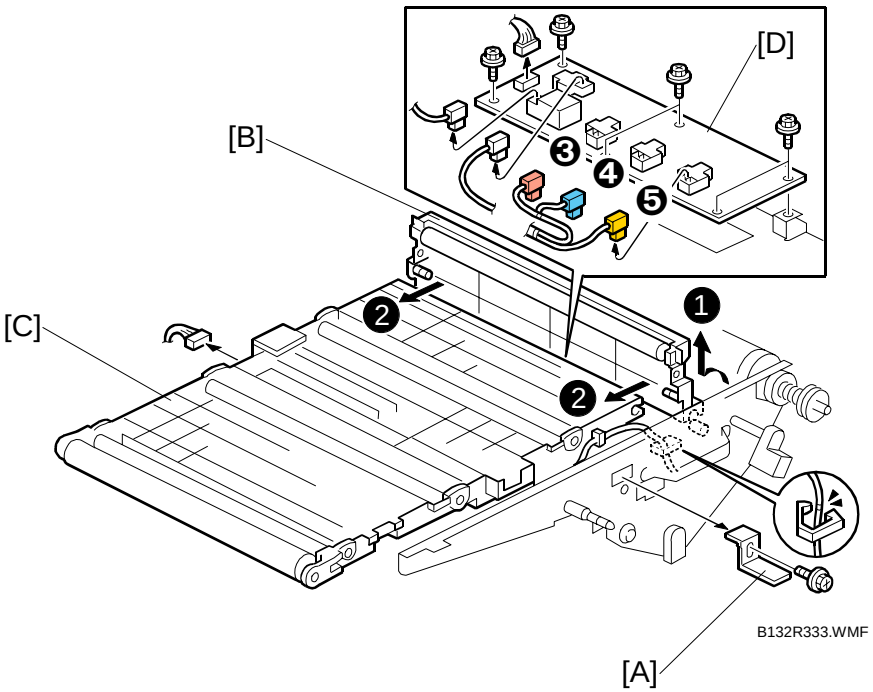

- Remove the ITB (☛3.8.1)

[A]: Support bracket (🔩 x1)
[B]: Small idle roller plate
[C]: Large idle roller plate
[D]: Image transfer power pack (🔩 x6, 🖐 x6)

Reinstallation

- Connect the color coded connectors at the correction positions.
  - ❸ Red
  - ❹ Blue
  - ❺ Yellow
- When you reattach the support bracket [A] rotate the screw [E] up as shown, then tighten it.

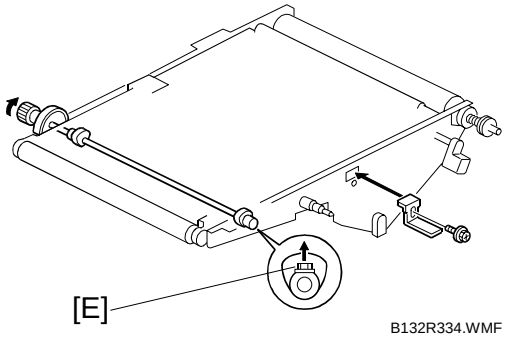

Reinstallation

- Do the forced MUSIC adjustment with SP 2111 001 (☛ 3.19.4).

Downloaded from www.Manualslib.com manuals search engine

3.8.6 BELT POSITION SENSORS

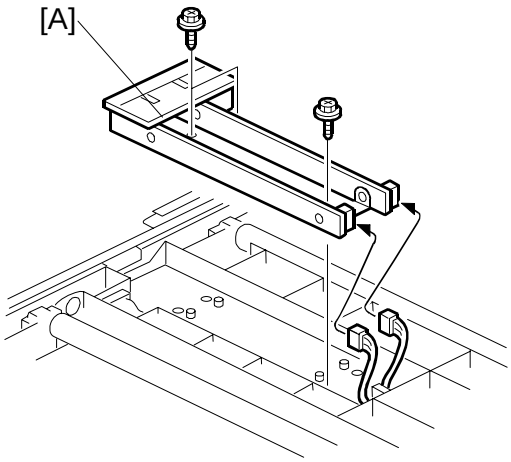

B132R335.WMF

- Remove the ITB (☛3.8.1)

[A]: Belt position sensor assembly (x3, x2)

Reinstallation

- Do the forced MUSIC adjustment with SP 2111 001 (☛ 3.19.4).

Downloaded from www.Manualslib.com manuals search engine

3.9 FUSING UNIT

3.9.1 FUSING BELT STRIPPERS

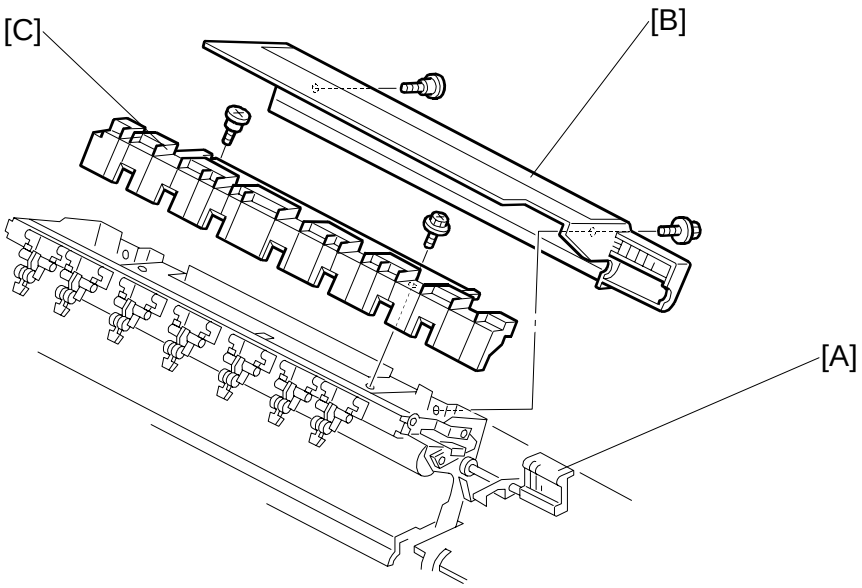

B132R403.WMF

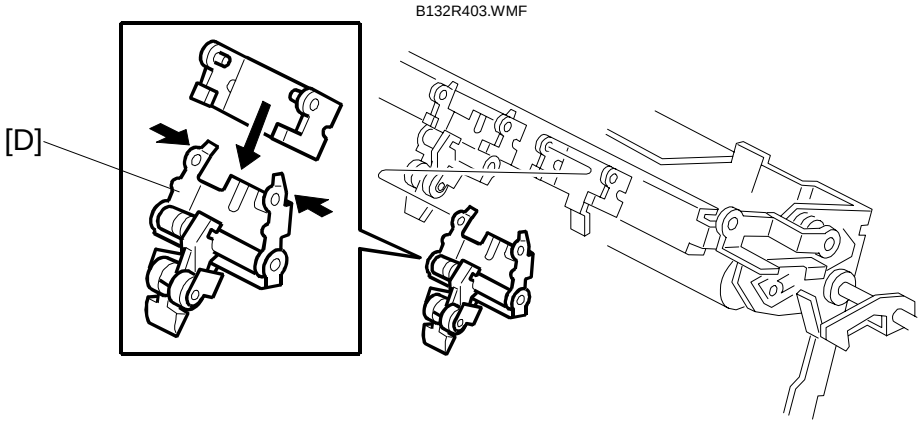

B132R402.WMF

Pull out the drawer unit (☛3.2.9)

[A]: Raise lever until it stops.
[B]: Fusing cleaning unit cover (☞ x2)
[C]: Fusing unit exit guide (☞ x2)
[D]: Hot roller stripper

- Press the sides in to disconnect the strippers and remove.

Downloaded from www.Manualslib.com manuals search engine

3.9.2 FUSING UNIT

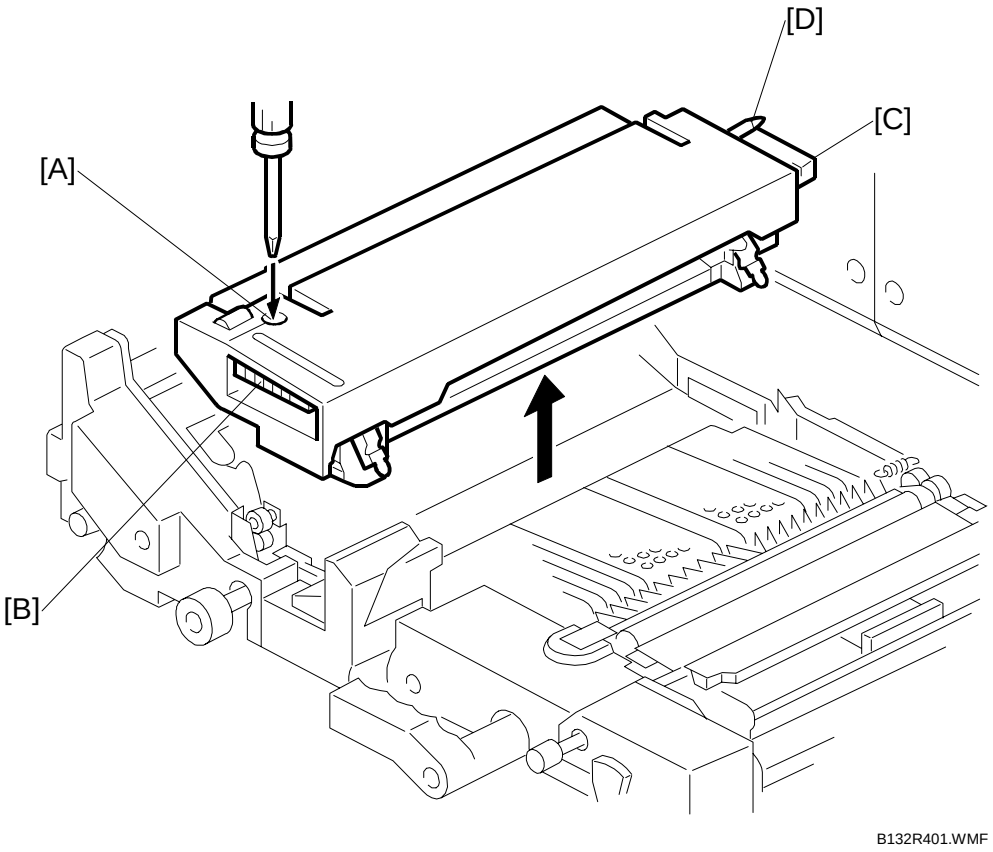

1. Turn the copier OFF and disconnect the power cord at the power source.
2. Open the front door.
3. Pull out the drawer unit. (☛3.2.9)
4. Allow the machine to cool for at least 10 minutes.
5. Loosen the fusing unit screw [A] (🔩 x1)
6. Grip the fusing unit at [B] and [C] and lift the unit to remove it.

Important

- Do not touch the reference pin [D] when lifting the fusing unit.

Downloaded from www.Manualslib.com manuals search engine

3.9.3 FUSING EXIT SENSOR, ACCORDION JAM SENSOR

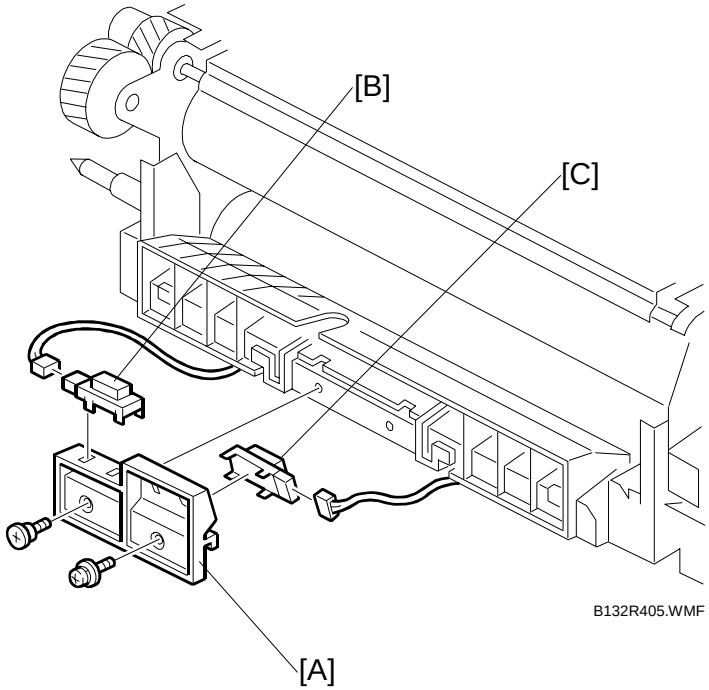

Remove:

- Fusing unit (☛3.9.2)

[A]: Sensor bracket (x2)
[B]: Fusing exit sensor (x1)
[C]: Accordion jam sensor (x1)

Downloaded from www.Manualslib.com manuals search engine

3.9.4 PRESSURE ROLLER THERMOSTATS, THERMISTOR

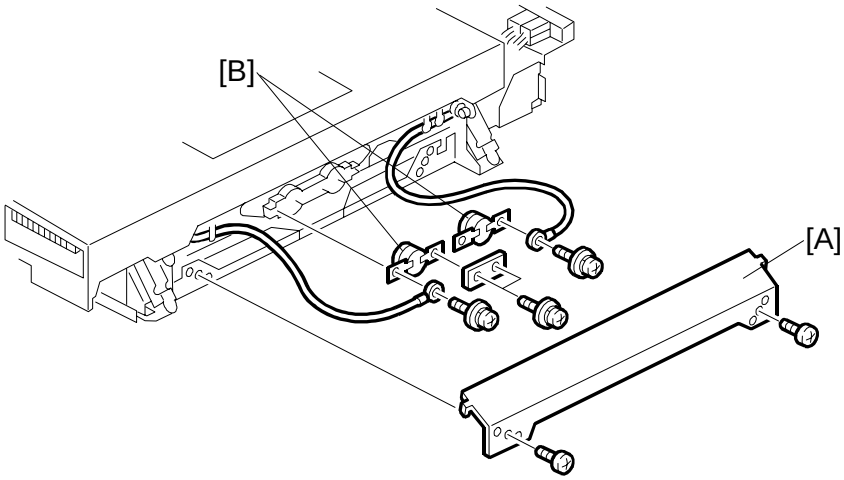

B132R407.WMF

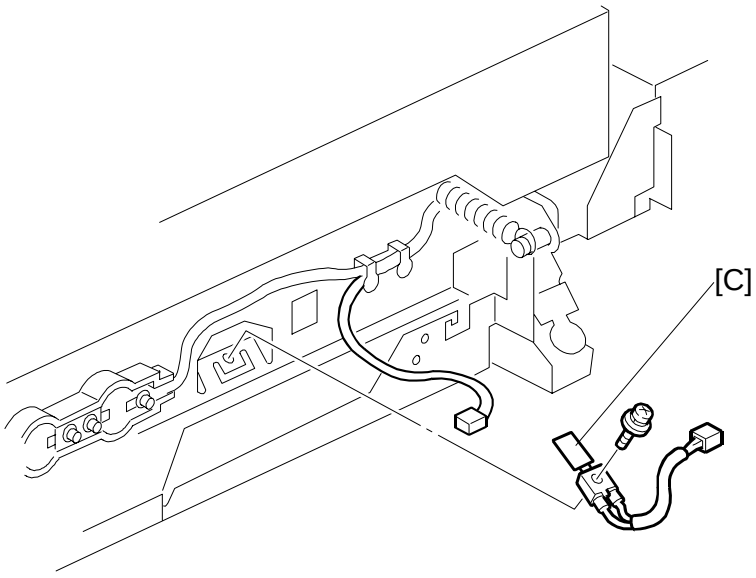

B132R410.WMF

Remove:

- Fusing unit (☛3.9.2)

[A]: Lower entrance guide cover (🔩 x2)
[B]: Pressure roller thermostats (🔩 x4)
[C]: Pressure roller thermistor (🔩 x1, 🖐 x1)

Downloaded from www.Manualslib.com manuals search engine

3.9.5 FUSING CLEANING UNIT

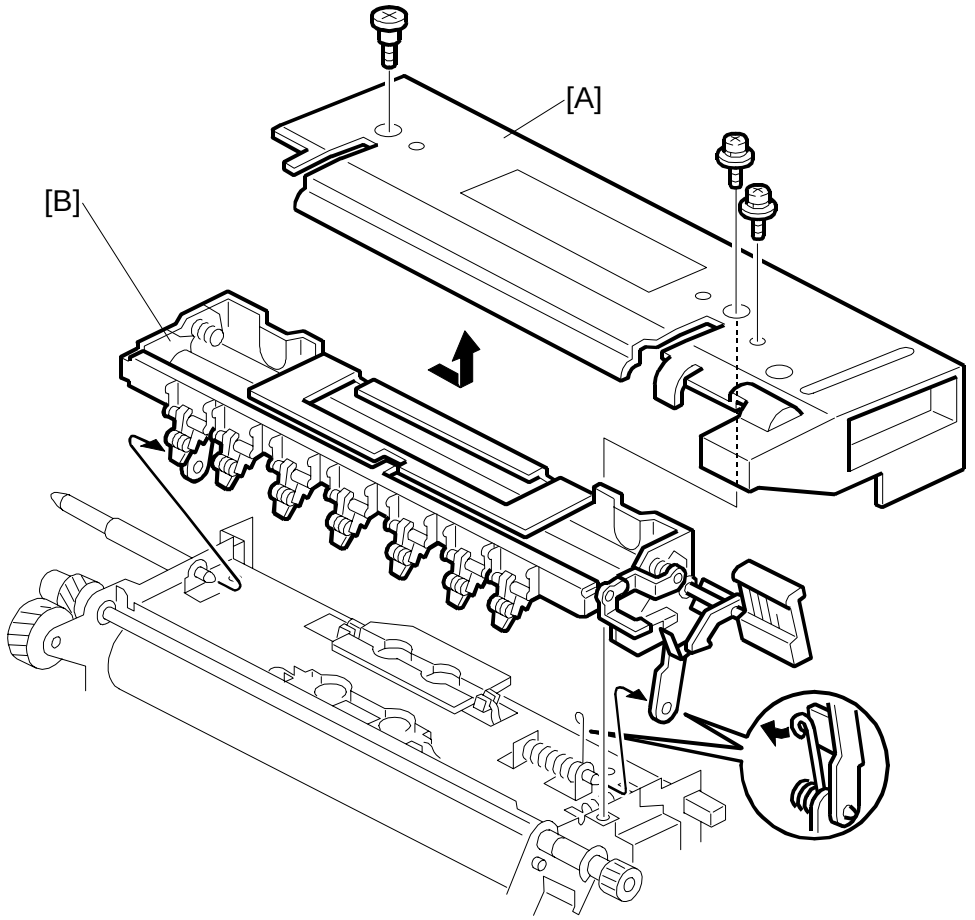

B132R408.WMF

Remove:

- Fusing unit (☛3.9.2)

[A]: Fusing unit upper cover (☞ x3)
[B]: Fusing cleaning unit (Spring x1)

Downloaded from www.Manualslib.com manuals search engine

3.9.6 FUSING BELT THERMOSTATS

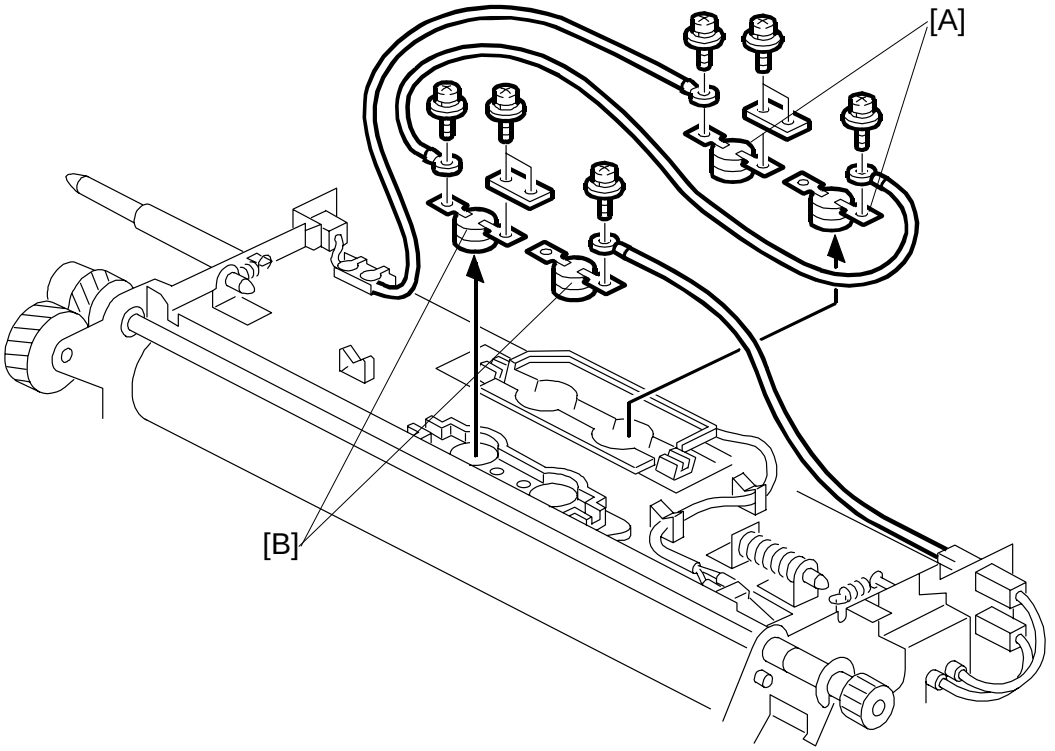

B132R411.WMF

Remove:

- Fusing unit (☛3.9.2)
- Fusing cleaning unit (☛3.9.5)

[A]: Two left thermostats (🔩 x4)
[B]: Two right thermostats (🔩 x4)

NOTE: The thermostats, installed in line with one another, are of two types. One is marked with a red mark, but their order of installation is not important.

Downloaded from www.Manualslib.com manuals search engine

3.9.7 FUSING THERMISTORS, HEATING ROLLER TEMPERATURE SENSOR

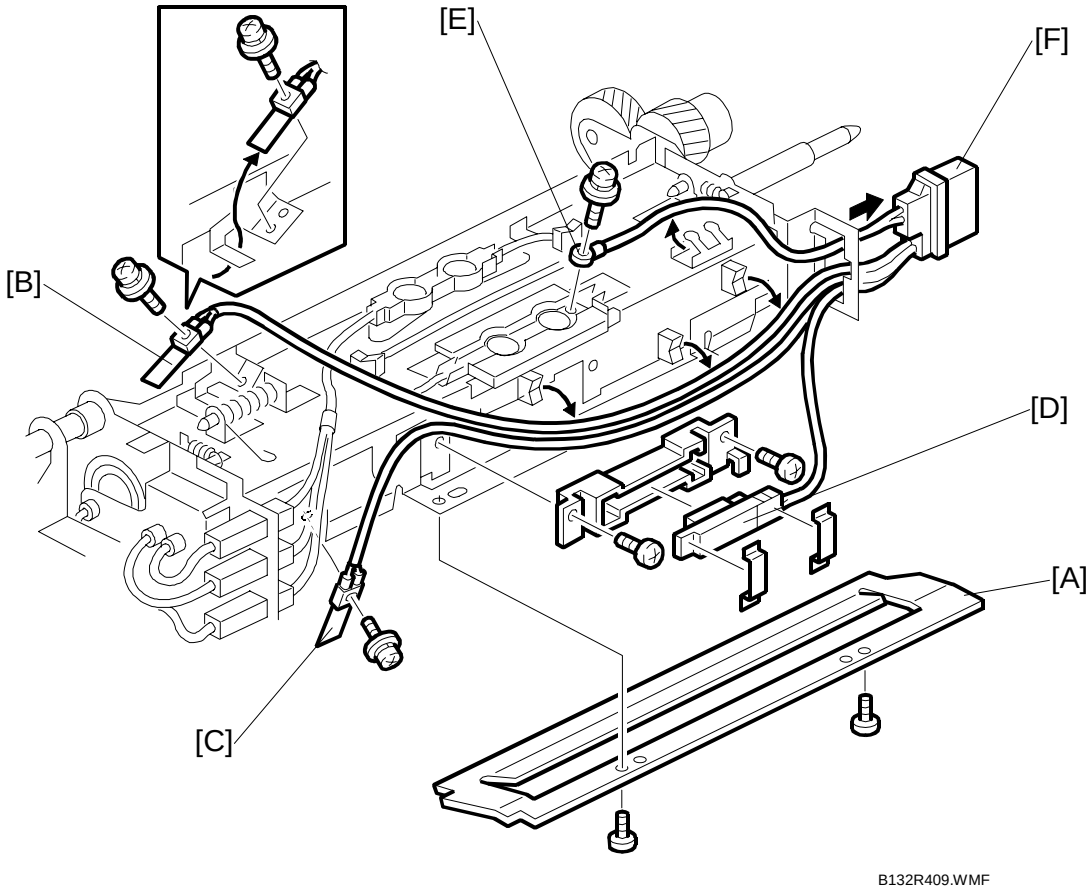

Remove:

- Fusing unit (☛3.9.2)
- Fusing unit upper cover (☛3.9.1)
- Fusing cleaning unit (☛3.9.5)

[A]: Fusing unit belt cover (☞ x2)
[B]: Hot roller thermistor (☞ x1)
[C]: Heating roller thermistor (☞ x1)
[D]: Heating roller temperature sensor (☞ x2, Spring plates x2)
[E]: Wire (☞ x1)
[F]: Connector leads. Pull through the frame.

Downloaded from www.Manualslib.com manuals search engine

3.9.8 FUSING BELT LUBRICATION ROLLER, CLEANING ROLLER

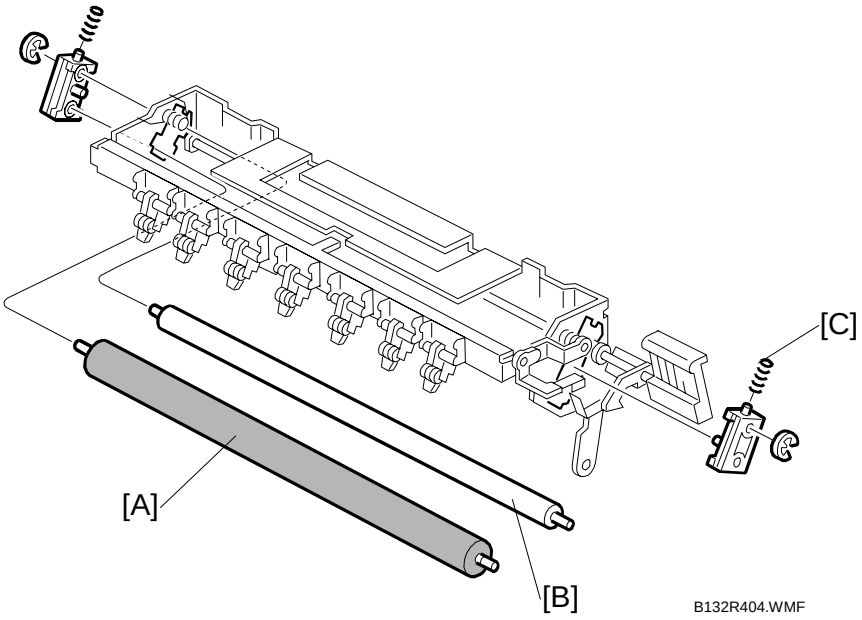

Remove:

- Fusing unit (☛3.9.2)
- Fusing cleaning unit (☛3.9.5)

1. Remove the fusing belt lubrication roller [A] (Springs x 2, Bushing x2, ℂ x2).
2. Remove the cleaning roller [B].
   NOTE: Press on each end of the roller to release the springs [C].

Reinstallation

- When you install the fusing belt lubrication roller, the end with the serial number must be toward the rear of the machine.

Downloaded from www.Manualslib.com manuals search engine

3.9.9 PRESSURE ROLLER CLEANING FELT ROLLER

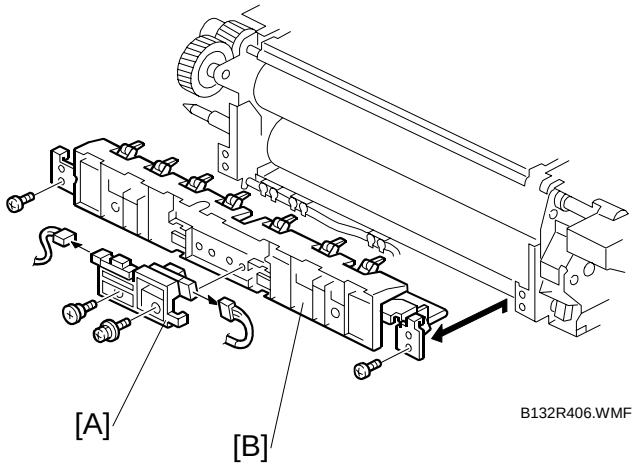

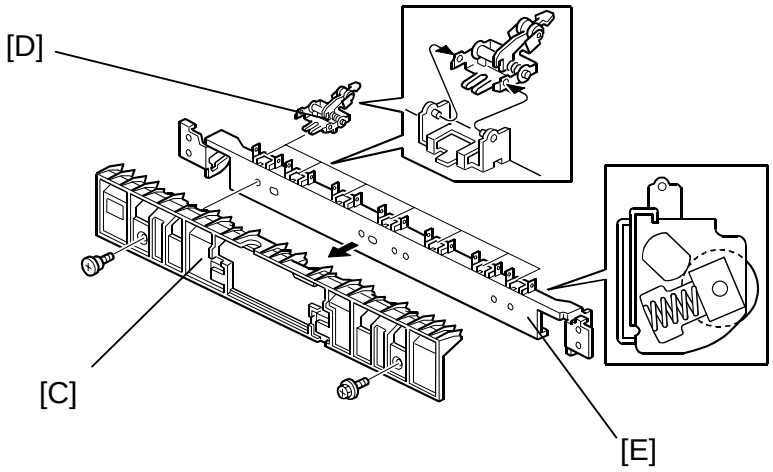

Remove:

- Fusing unit (☛3.9.2)

[A]: Exit sensor bracket (x2, x2)
[B]: Lower exit guide assembly (x2)
[C]: Lower exit guide (x2)
[D]: Pressure roller strippers (x7)
[E]: Cleaning felt roller Assy

Downloaded from www.Manualslib.com manuals search engine

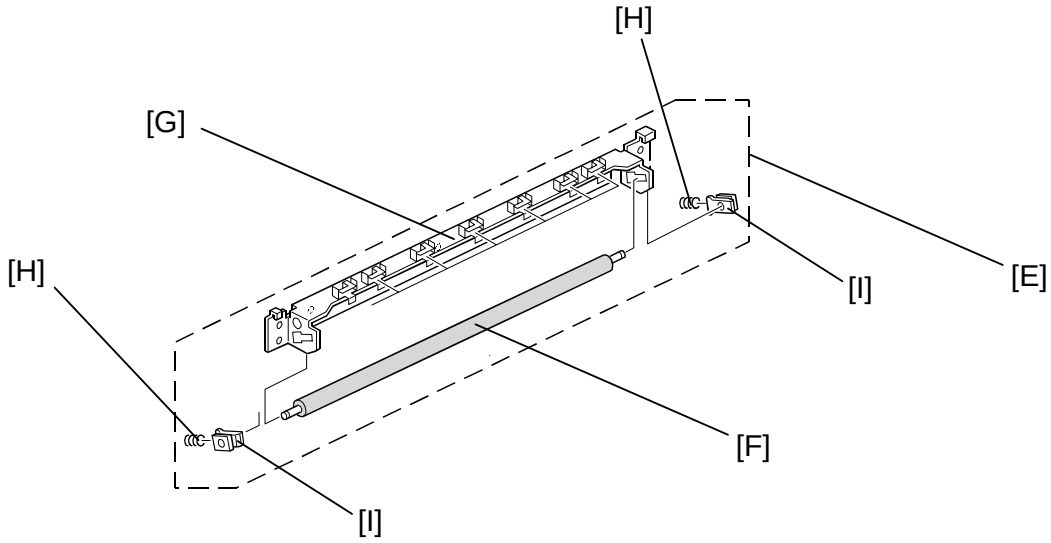

Remove:

[E]: Cleaning felt roller Assy
[F]: Cleaning felt roller
[G]: Bracket
[H]: Springs
[I]: Bushings

Downloaded from www.Manualslib.com manuals search engine

3.9.10 HOT ROLLER, HEATING ROLLER FUSING LAMPS

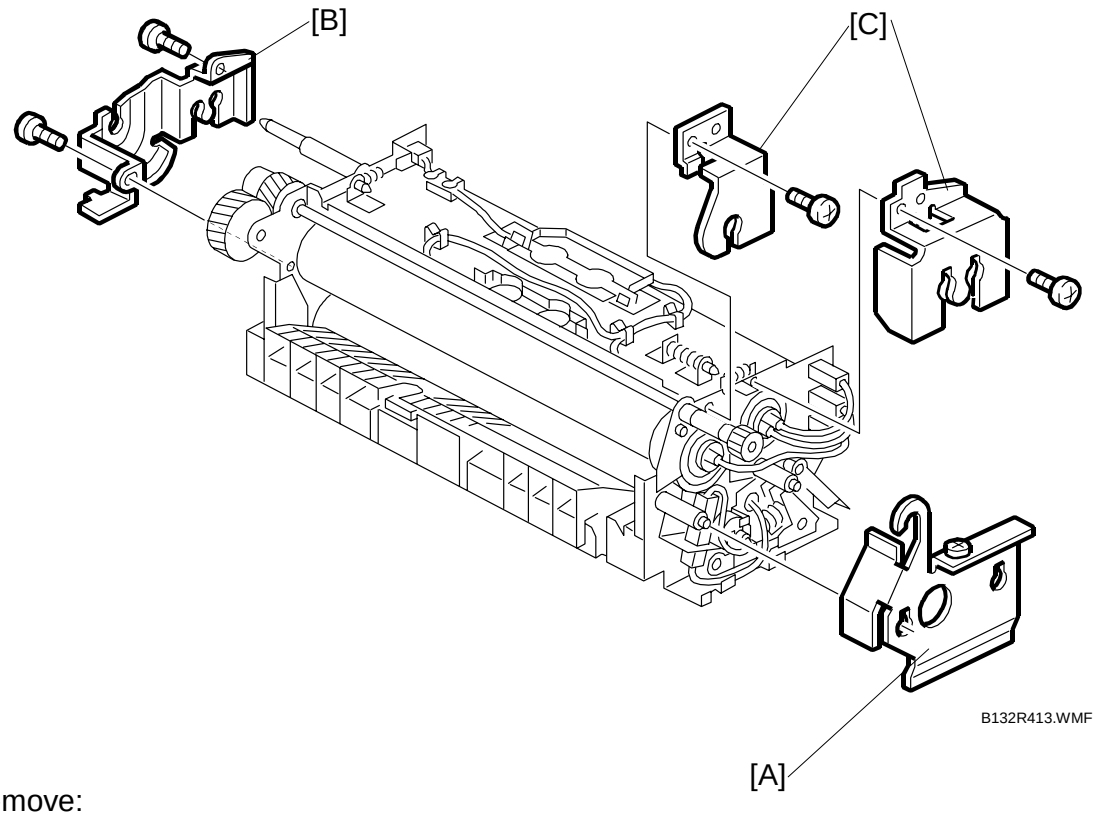

Remove:

- Fusing unit (☛3.9.2)
- Fusing unit upper cover (☛3.9.1)
- Fusing cleaning unit (☛3.9.5)

[A]: Bracket
[B]: Rear lamp bracket (x2)
[C]: Front lamp brackets (x1 each)

Downloaded from www.Manualslib.com manuals search engine

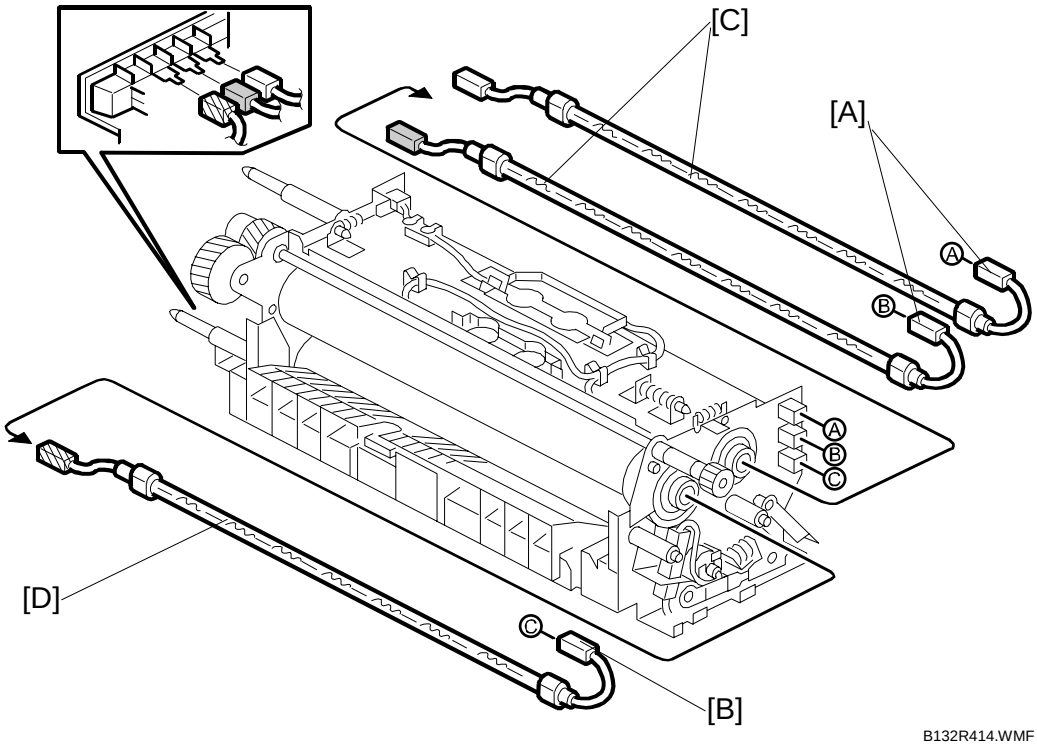

B132R414.WMF

Important! Before disconnecting the lamps, mark the connectors to ensure that you match their connection points correctly at reinstallation.

Disconnect at front and rear:

[A]: Heating roller fusing lamp connectors (☞ x4)
[B]: Hot roller fusing lamp connectors (☞ x2)

Remove:

[C]: Heating roller fusing lamps x2
[D]: Hot roller fusing lamp x1

Downloaded from www.Manualslib.com manuals search engine

3.9.11 PRESSURE ROLLER FUSING LAMP

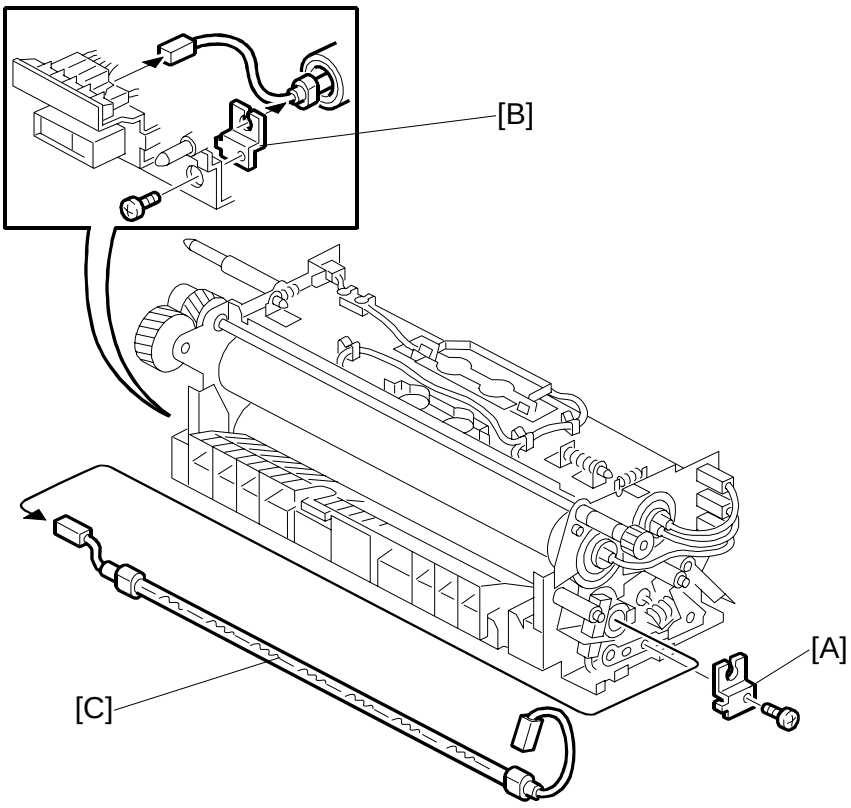

B132R412.WMF

Remove:

- Fusing unit (☛3.9.2)
- Fusing unit upper cover (☛3.9.1)
- Fusing cleaning unit (☛3.9.5)
- Brackets (☛3.9.10)

[A]: Pressure roller lamp front bracket (x1)
[B]: Pressure roller lamp rear bracket (x1)
[C]: Pressure roller fusing lamp (x2)

Downloaded from www.Manualslib.com manuals search engine

3.9.12 HEATING ROLLER, FUSING BELT, HOT ROLLER

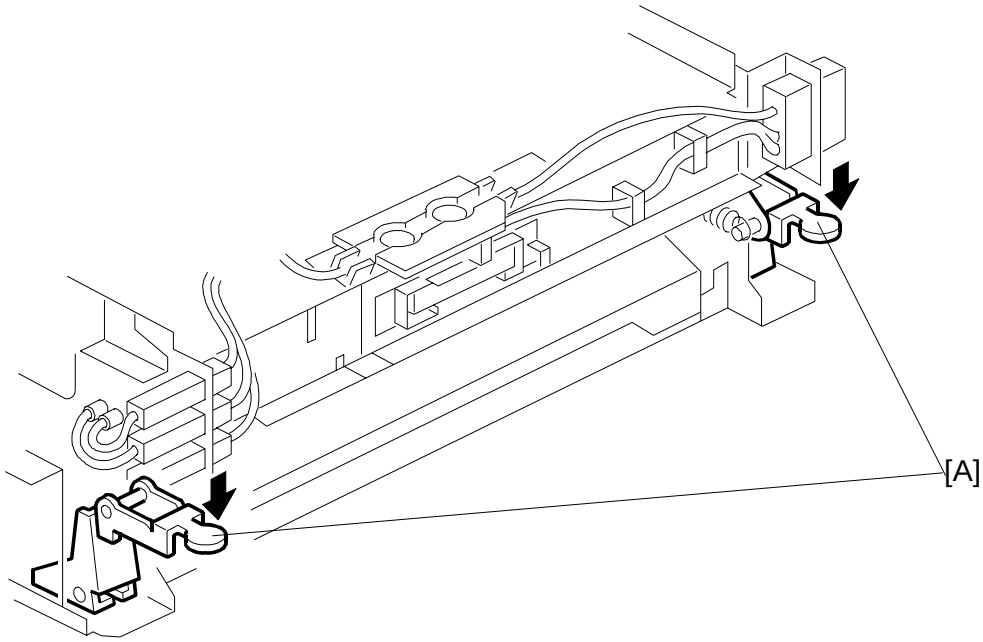

B132R415.WMF

Remove:

- Fusing unit (☛3.9.2)
- Fusing unit upper cover (☛3.9.1)
- Fusing cleaning unit (☛3.9.5)
- Hot roller fusing lamp, heating roller fusing lamp (x3) (☛3.9.10)

[A]: Release levers. Press down to release.

Downloaded from www.Manualslib.com manuals search engine

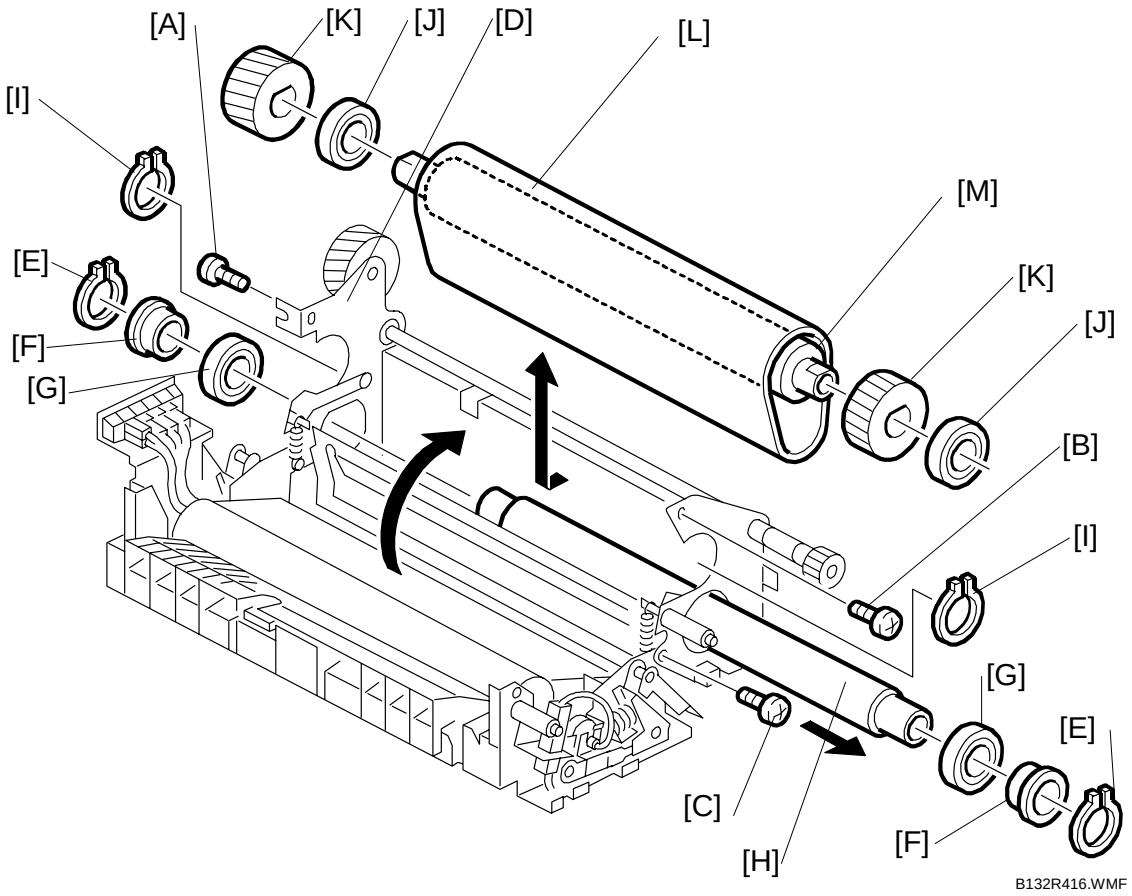

1. Remove screws [A], [B], [C] (x3).
2. Rotate the frame [D] to the right.
3. At the front and rear of the heating roller, remove:
   [E] Lock rings
   [F] Bushings
   [G] Bearings
4. Remove the heating roller [H]
5. At the front and rear of the hot roller, remove:
   [I] Lock rings
   [J] Shaft bearings
   [K] Gears
6. Remove the fusing belt [L] and hot roller [M].

Downloaded from www.Manualslib.com manuals search engine

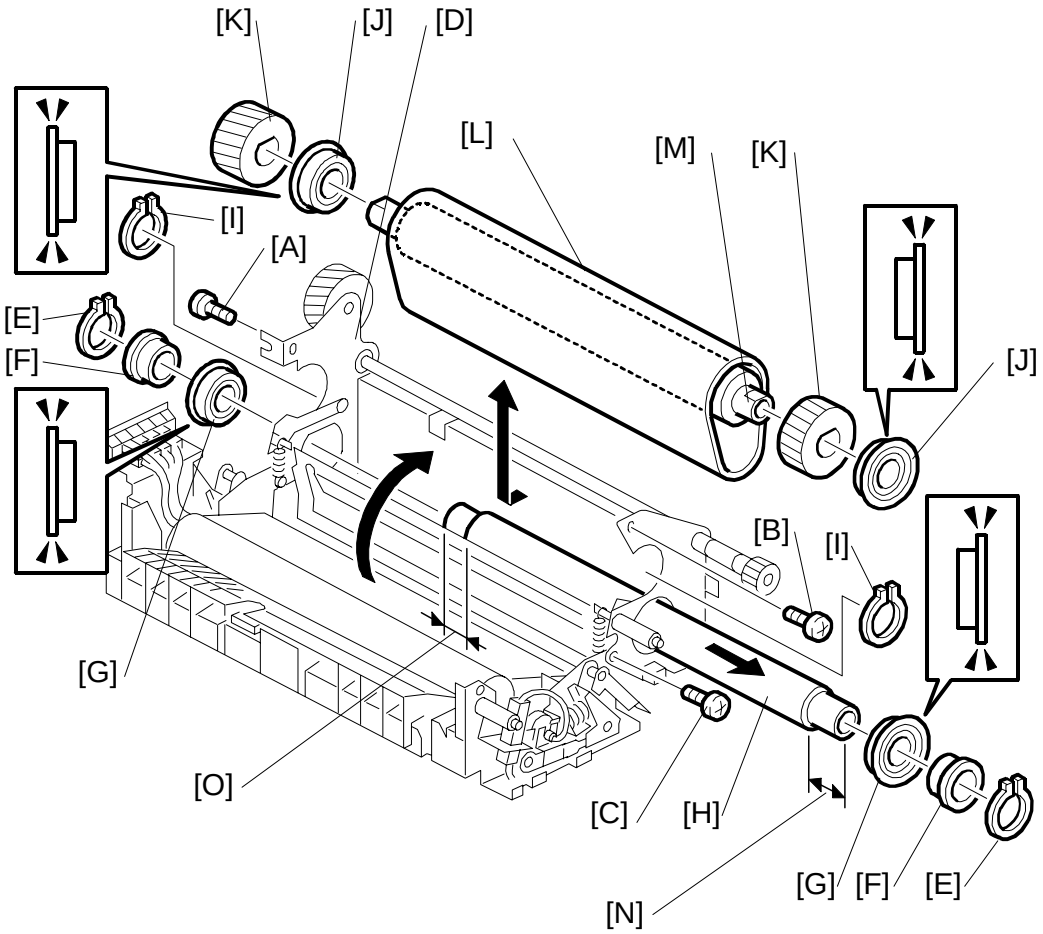

Assembling procedure:

- Attach the fusing belt [L] and hot roller [M].
- Attach the lock rings [I], shaft bearings [J] and gears [K] to the front and rear of the heating roller.
  NOTE: Make sure the bearing flange is on the outside.
- Attach the heating roller [H] (Length [N] > [O]).
- Attach the lock rings [E], bushings [F] and bearings [G] to the front and rear of the heating roller.
  NOTE: Make sure the bearing flange is on the outside.
- Rotate the flame [D] to the left.
- Tight the three screws [A], [B] and [C].

Downloaded from www.Manualslib.com manuals search engine

3.9.13 PRESSURE ROLLER

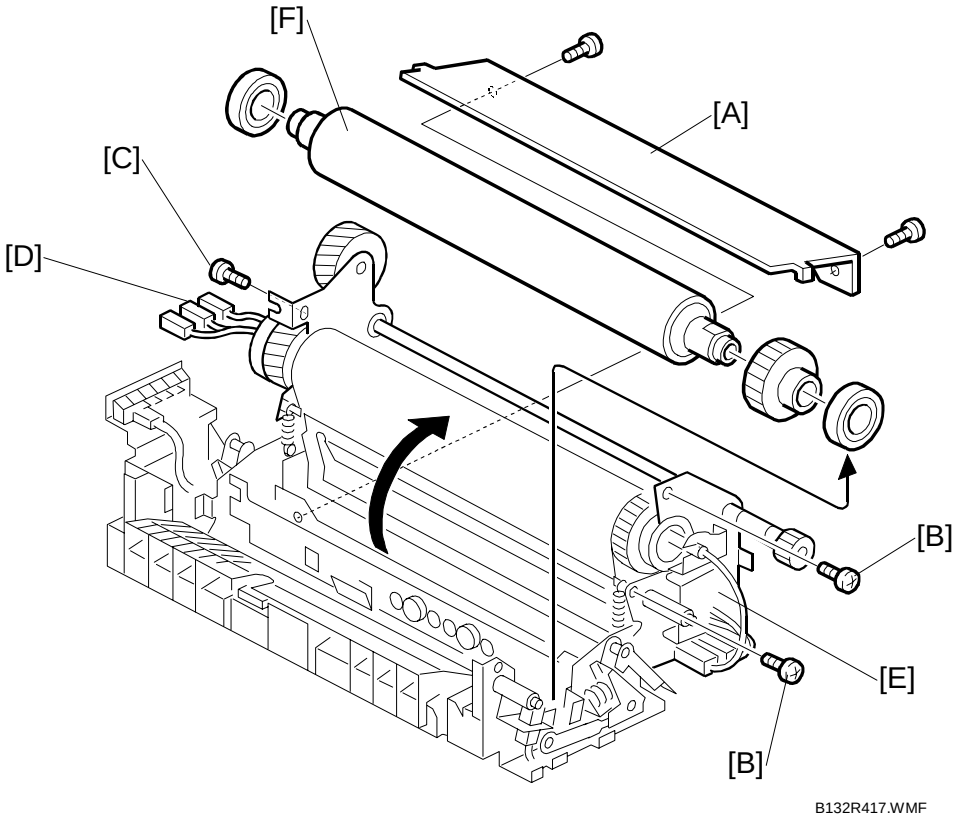

Remove:

- Fusing unit (☛3.9.2)
- Fusing unit upper cover (☛3.9.15)
- Fusing cleaning unit (☛3.9.5)
- Pressure roller fusing lamp (x1) (☛3.9.11)

[A]: Lower fusing entrance guide (☞ x2)
[B]: Front screw (☞ x2)
[C]: Rear screw (☞ x1)
[D]: Hot roller fusing lamp (✋ x1), heating roller fusing lamps (✋ x2)
[E]: Rotate the frame to the right, in the direction shown by the arrow.
[F]: Pressure roller.

NOTE: Lift pressure roller and remove without detaching shaft bearing and gears.

Downloaded from www.Manualslib.com manuals search engine

3.9.14 PRESSURE ROLLER STRIPPER

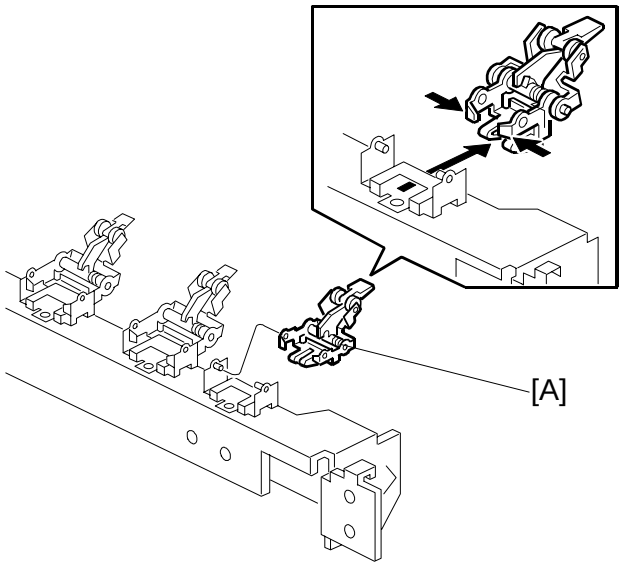

B132R418.WMF

Remove:

- Fusing unit (☛3.9.2)
- Lower exit guide assembly (☛3.9.9)

[A]: Pressure roller strippers

Downloaded from www.Manualslib.com manuals search engine

3.10 DUPLEX UNIT

3.10.1 DUPLEX INVERTER MOTOR

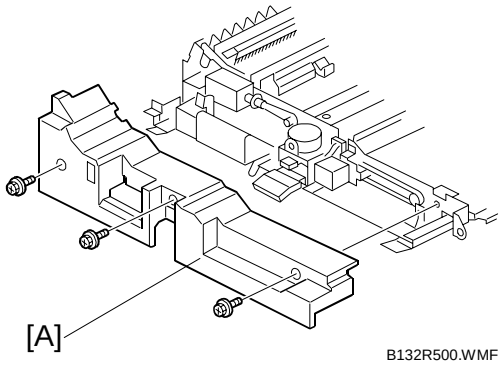

B132R500.WMF

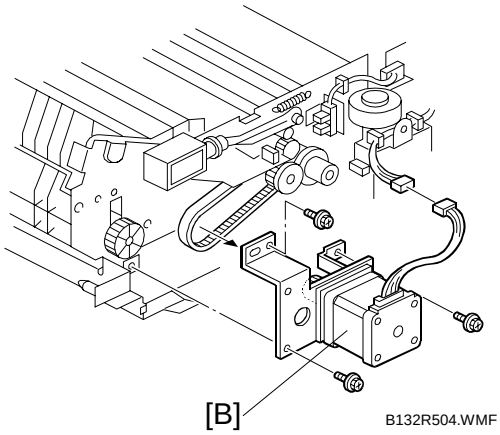

B132R504.WMF

- Pull out the duplex unit.

[A]: Duplex unit front cover (x3)
[B]: Duplex inverter motor (x3, x1, Timing belt x1, Gear x1)

Downloaded from www.Manualslib.com manuals search engine

3.10.2 DUPLEX TRANSPORT MOTOR

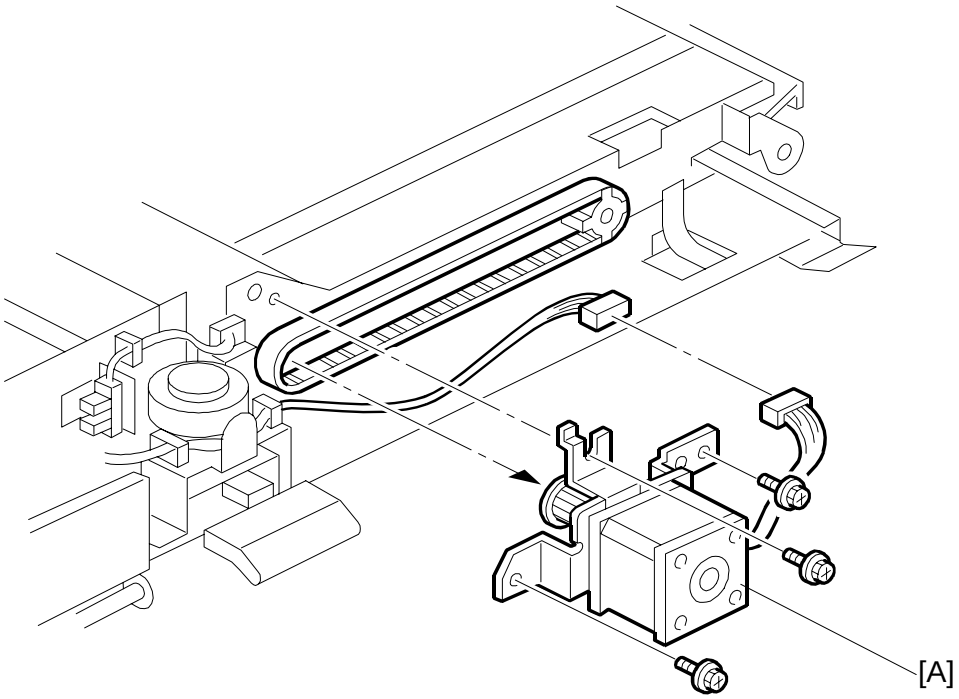

B132R506.WMF

- Pull out the duplex unit.
- Release the lower guide plate with knob **F**.

Remove:

- Duplex unit front cover (☛3.10.1)

[A]: Duplex transport motor (🔩 x3, 🖐 x1, Timing belt x 1)

Downloaded from www.Manualslib.com manuals search engine

3.10.3 DUPLEX UNIT SENSORS

Duplex Entrance Sensor

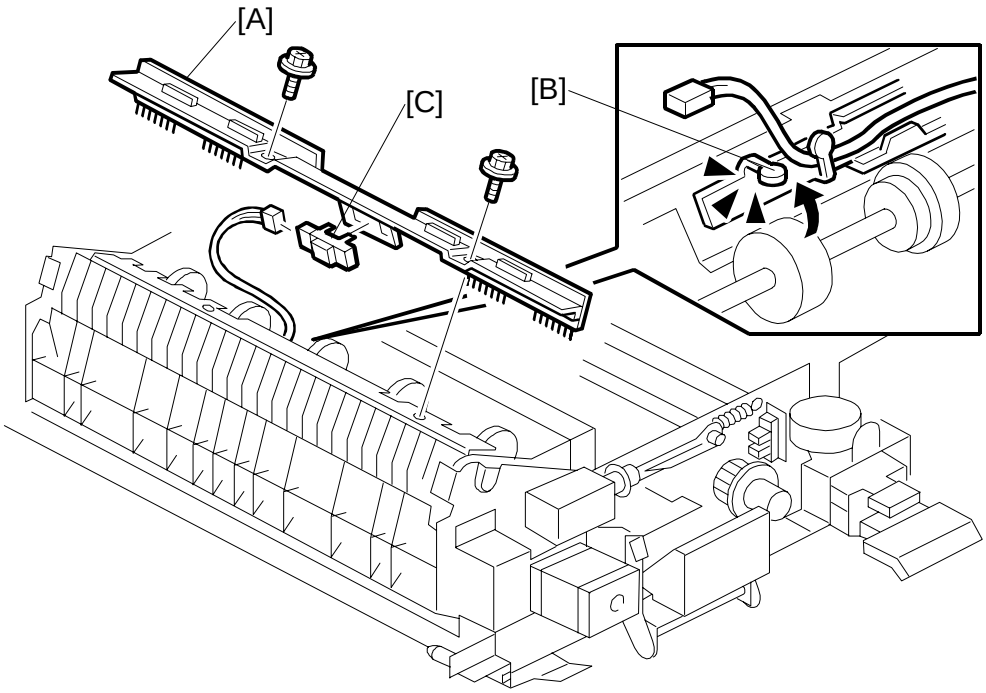

B132R502.WMF

- Pull out the duplex unit.

Remove:

[A]: Bracket (x 2)
[B]: Release harness clamp
[C]: Duplex entrance sensor (x 1)

Reinstallation

- Insert the anti-static brushes into the roller holes.

Downloaded from www.Manualslib.com manuals search engine

Transport Sensor 1, 2, Inverter Exit Sensor

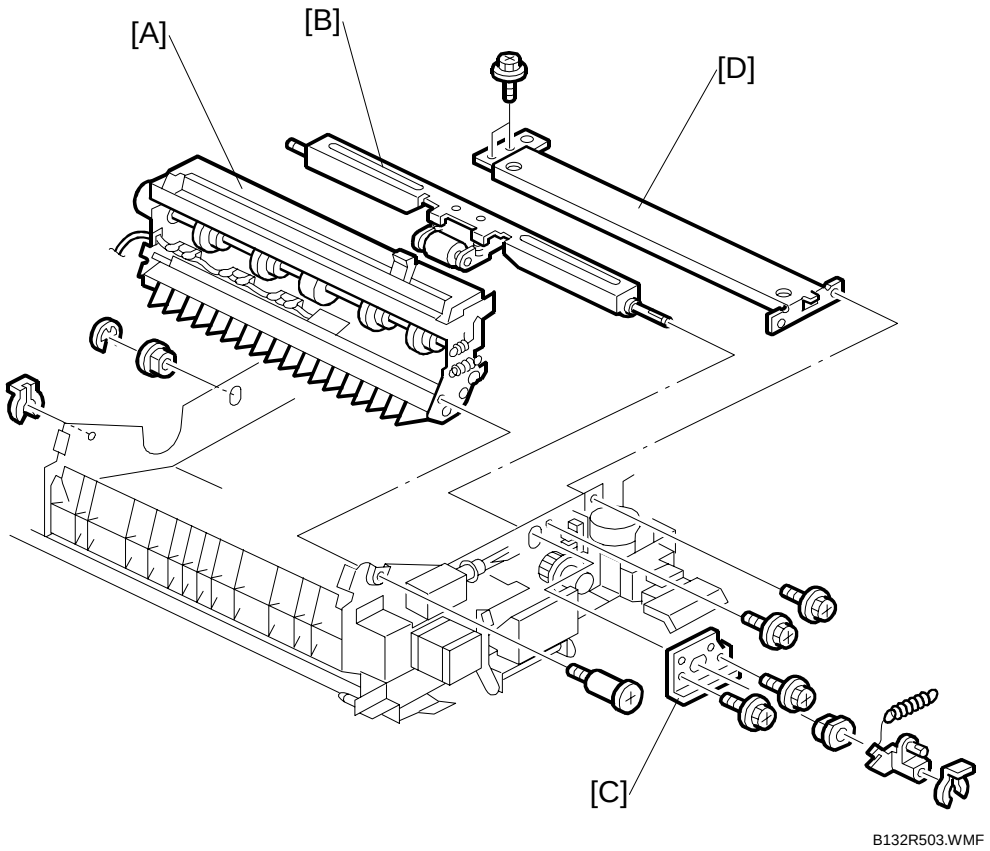

Remove the duplex unit (☛3.2.10)

[A]: Inverter unit (x1 front, x1 rear, x1)
[B]: Reverse trigger roller assembly (Rear: x1, Shaft bushing x1) (Front: x1, Link gear x1, Spring x1, Shaft bushing x1)
[C]: Plate (x2)
[D]: Cross-stay (x 4)

Downloaded from www.Manualslib.com manuals search engine

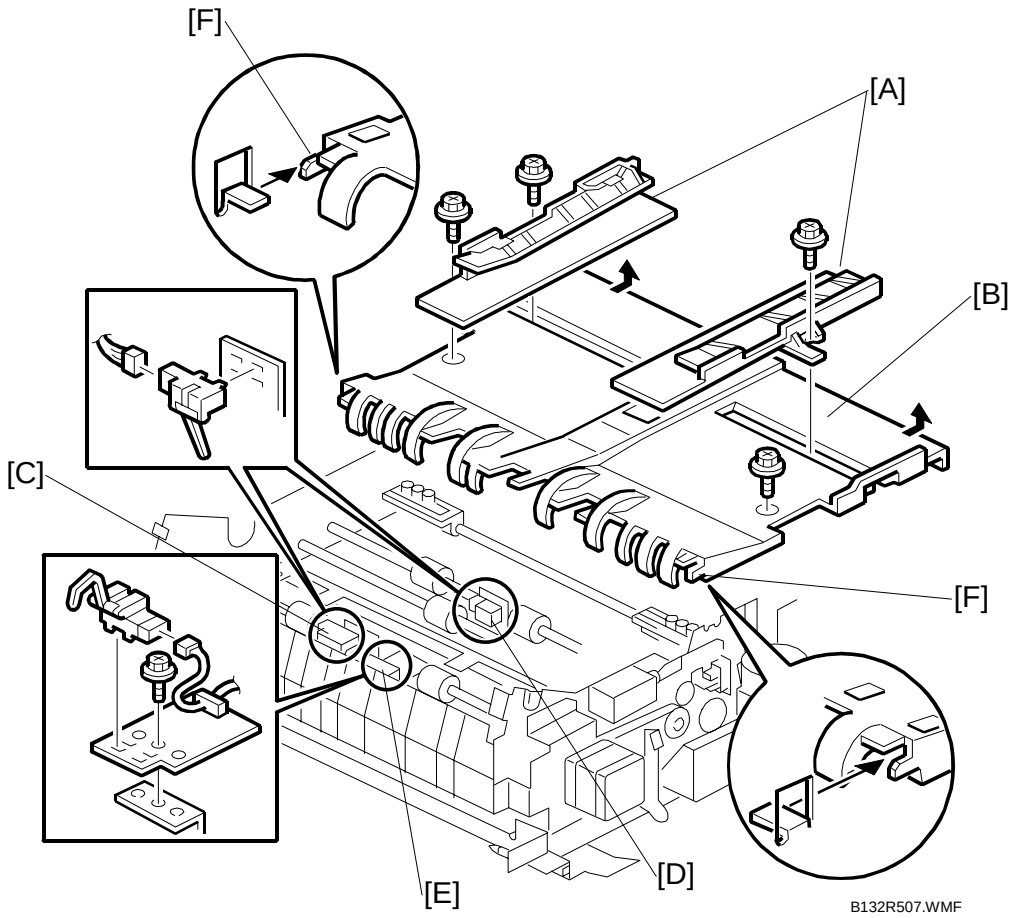

[A]: Jogger fences (x 1 ea.)
[B]: Left transport cover (x 2)
- The front screw is a shoulder screw. Insert the screws in the correct holes when re-attaching.
- To avoid breaking the tabs under the left edge of the table, pull the table to the right to disengage the tabs and then remove.

[C]: Transport sensor 1 (x 1, x 1)
[D]: Transport sensor 2 (x 1, x 1)
[E]: Inverter exit sensor (x 1, x 1, x 1)

Reinstallation

- Make sure the end tabs [F] of the left transport cover are engaged correctly.

Downloaded from www.Manualslib.com manuals search engine

Transport Sensor 3

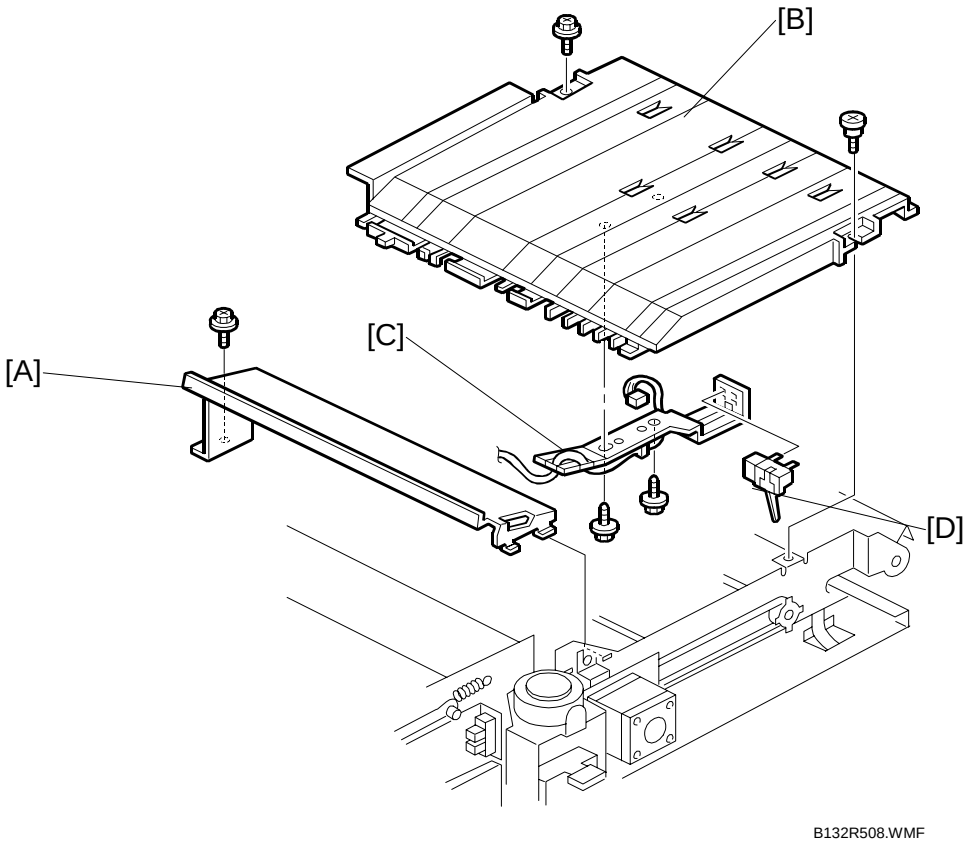

Remove:

[A]: Duplex unit front cover (☛3.10.1)
[B]: Cross stay (x 1)
[C]: Right transport cover (x 2, x 1)
NOTE: The front screw is a shoulder screw. Insert the screws in the correct holes when re-attaching.
[D]: Transport sensor bracket (x 2)
[E]: Transport sensor 3 (x 1)

Downloaded from www.Manualslib.com manuals search engine

3.10.4 DUPLEX JOGGER MOTOR

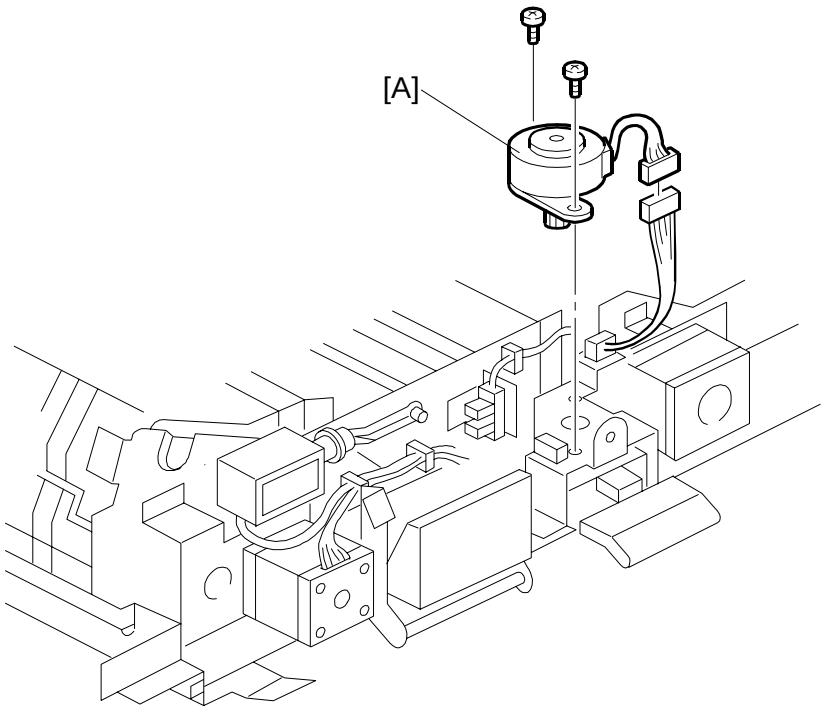

B132R505.WMF

Remove:

[A]: Duplex unit front cover (☛3.10.1)

[B]: Duplex jogger motor (x2, x1)

Downloaded from www.Manualslib.com manuals search engine

3.10.5 DUPLEX JOGGER BELT

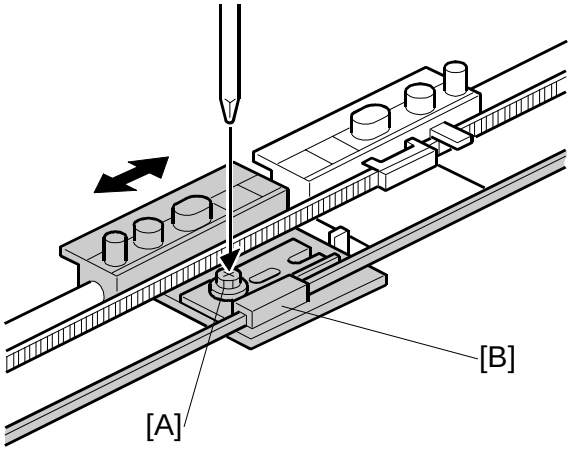

B140R819.WMF

Remove:

- Remove the inverter unit (☛3.10.3)
- Cross stay (☛3.10.3)
- Reverse trigger roller assembly (☛3.10.3)
- Jogger fences (☛3.10.3)
- Left transport cover (☛3.10.3)
- Duplex jogger motor (☛3.10.4).

1. If you are replacing the belt, set both jogger fence brackets at the center of the belt and tighten the screw [A].
2. If you are adjusting the belt, loosen the screw and slide the plastic piece [B] on the belt to the left or right to adjust the position of the front fence, then tighten the screw.

Downloaded from www.Manualslib.com manuals search engine

3.11 TANDEM TRAY (TRAY 1)

3.11.1 TANDEM TRAY

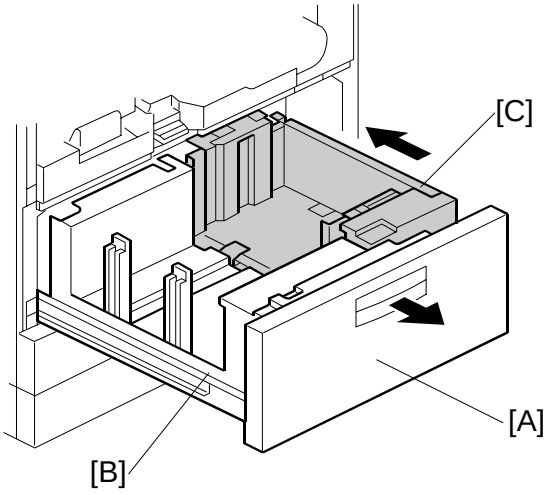

B140R820.WMF

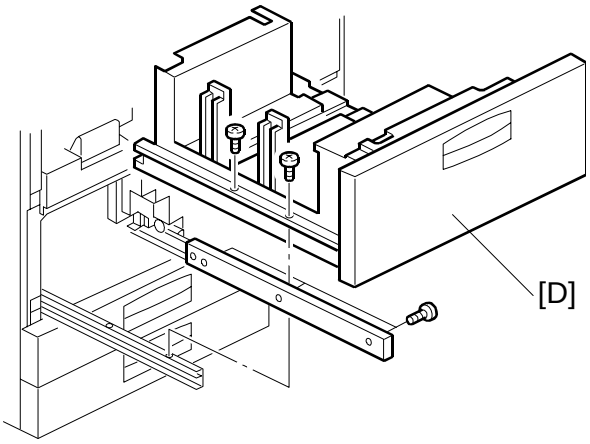

B140R821.WMF

1. Open the front door.
2. Pull out the tandem tray drawer [A] completely to separate the left [B] and right [C] sides of the tandem tray.
3. Remove the left tandem tray [D] (x 5).

Downloaded from www.Manualslib.com manuals search engine

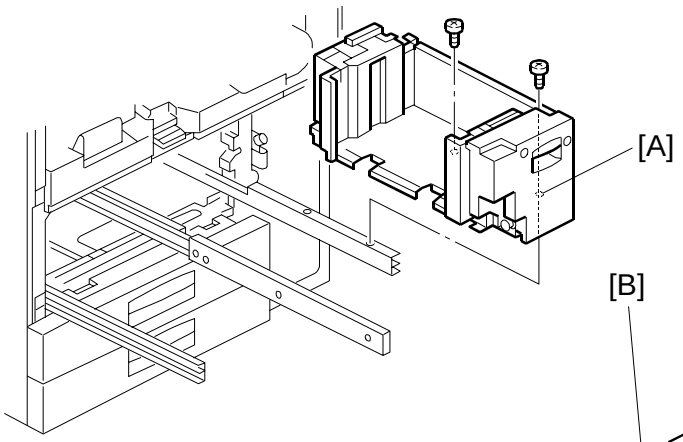

B140R822.WMF

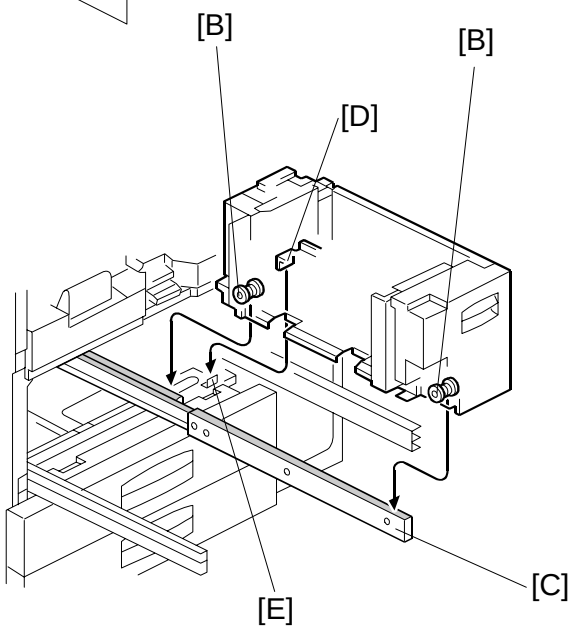

B140R823.WMF

[A]: Right tandem tray (☞ x 2).

NOTE: 1) When re-installing the right tandem tray, make sure that the wheels [B] ride on the slide rail [C].
2) When re-installing the right tandem tray, make sure that the tandem tray stopper [D] is set behind the stopper [E] on the frame.

Downloaded from www.Manualslib.com manuals search engine

3.11.2 REAR FENCE RETURN SENSOR REPLACEMENT

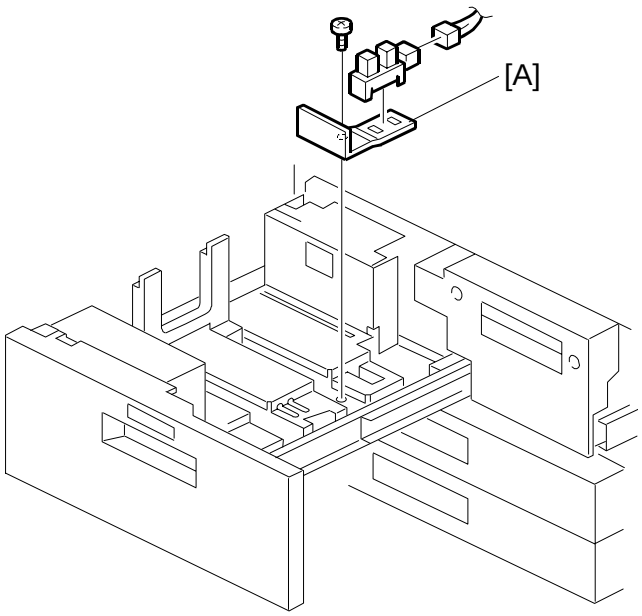

B132R623.WMF

- Pull out the tandem feed tray.

[A]: Return sensor assembly (☞ x 1, 🪛 x1).

Downloaded from www.Manualslib.com manuals search engine

3.11.3 REAR FENCE HP SENSOR REPLACEMENT

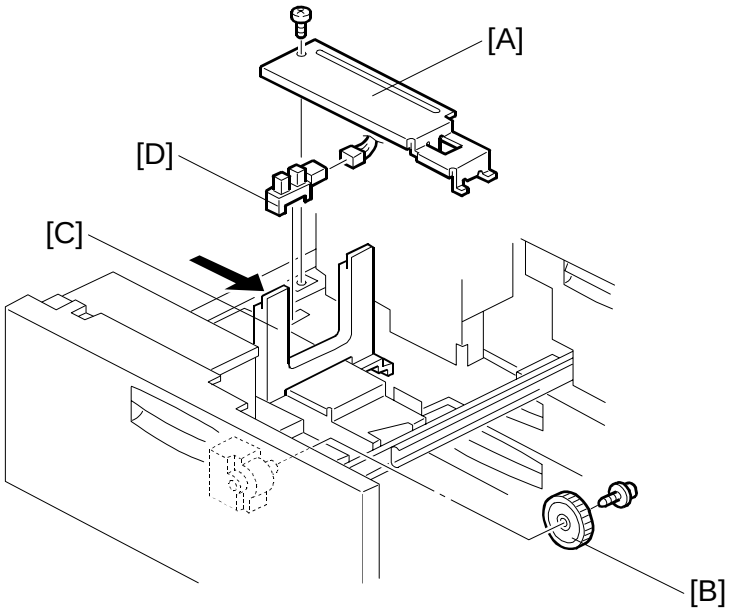

B140R825.WMF

- Pull out the tandem feed tray.

[A]: Rear bottom plate (☞ x 1).
[B]: Back fence transport gear (☞ x 1)
[C]: Move the back fence to the right.
[D]: Rear fence HP sensor (☞ x 1)

Downloaded from www.Manualslib.com manuals search engine

3.11.4 TANDEM RIGHT TRAY PAPER SENSOR REPLACEMENT

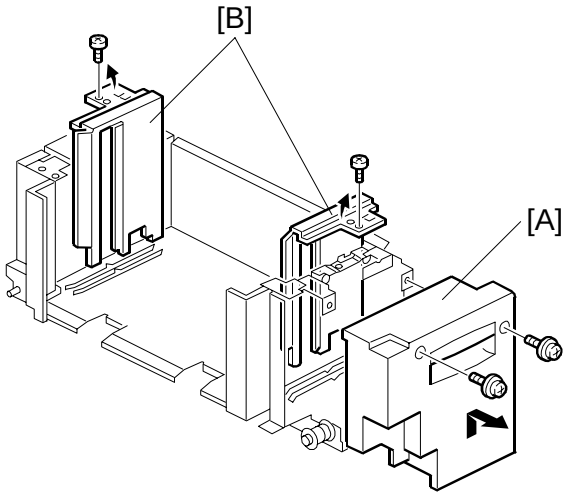

B140R826.WMF

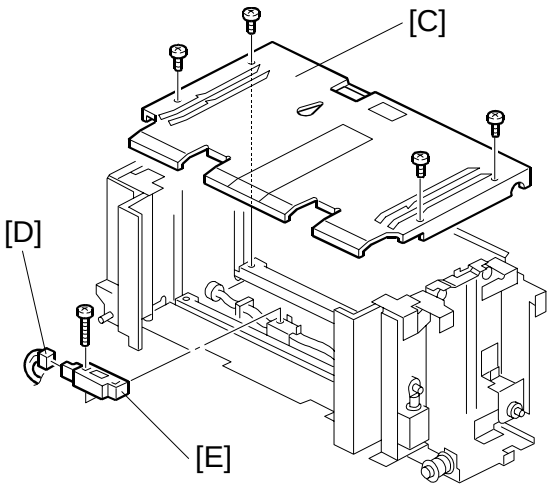

B140R827.WMF

Remove the right tandem tray (☛ 3.11.1)

[A]: Inner cover (☞ x 2)
[B]: Side fences (☞ x 1 each)
[C]: Bottom plate (☞ x 4)
[D]: Connector (☜ x 1)
[E]: Tandem right tray paper sensor (☞ x 1)

Downloaded from www.Manualslib.com manuals search engine

3.11.5 BOTTOM PLATE LIFT WIRE REPLACEMENT

NOTE: Before replacing the rear bottom plate lift wire, remove the front bottom plate lift wire. It is necessary to remove the shaft for replacing the rear bottom plate lift wire.

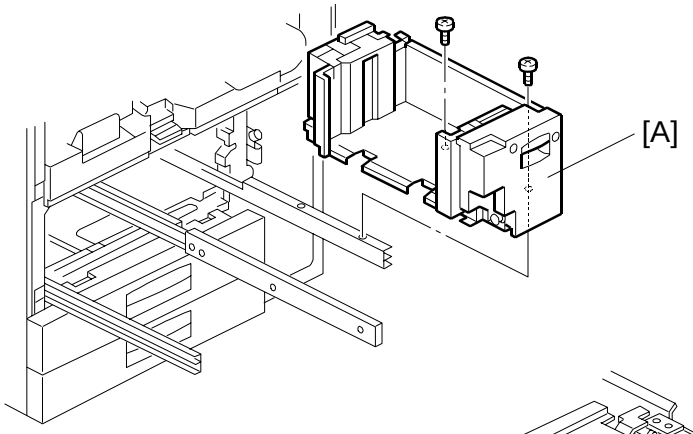

B140R828.WMF

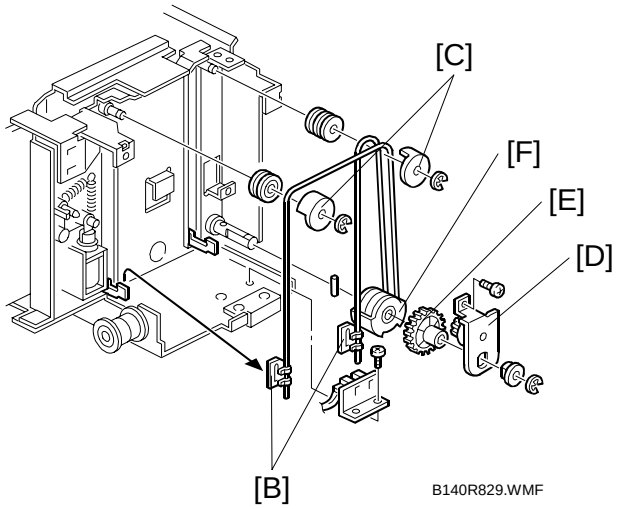

B140R829.WMF

Remove the right tandem tray. (☛ 3.11.11)

[A]: Remove the inner cover (🔩 x 2) (☛ 3.11.14)

[B]: Wire stoppers

- Slightly lift the front bottom plate and unhook.

[C]: Wire covers (ℂ x 1 each)

[D]: Bracket (🔩 x 1, ℂ x 1, bushing x 1)

[E]: Gear

[F]: Bottom plate lift wire

Downloaded from www.Manualslib.com manuals search engine

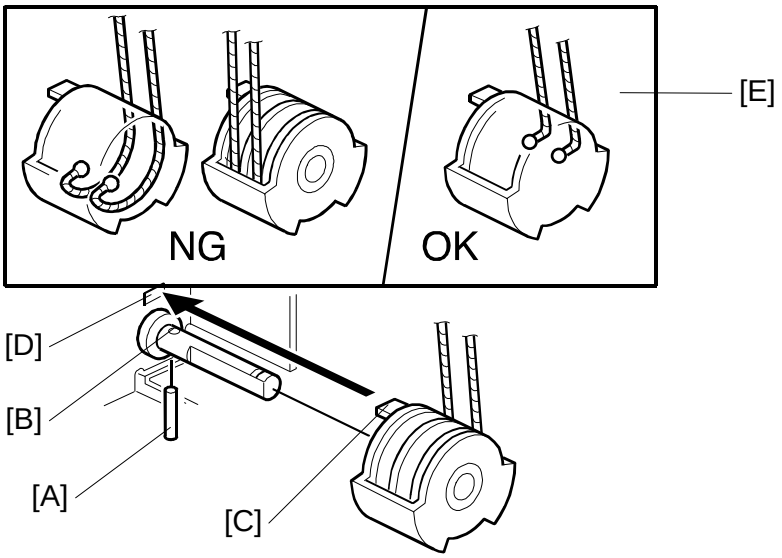

B140R830.WMF

NOTE: When re-installing the bottom plate lift wire:
1) Set the positioning pin [A] in the hole [B], and set the projection [C] in the hole [D].
2) Position the wire as shown [E].
3) Do not cross the wires.

Downloaded from www.Manualslib.com manuals search engine

3.11.6 TANDEM TRAY PAPER SIZE CHANGE

At the factory, this tray is set up for A4 or LT LEF. Only A4 or LT LEF paper can be used for tandem feed.

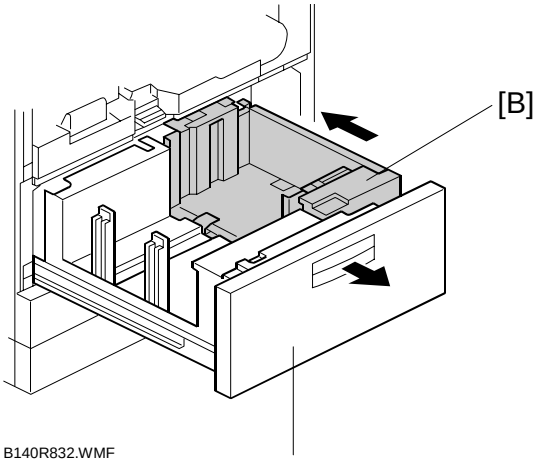

B140R832.WMF

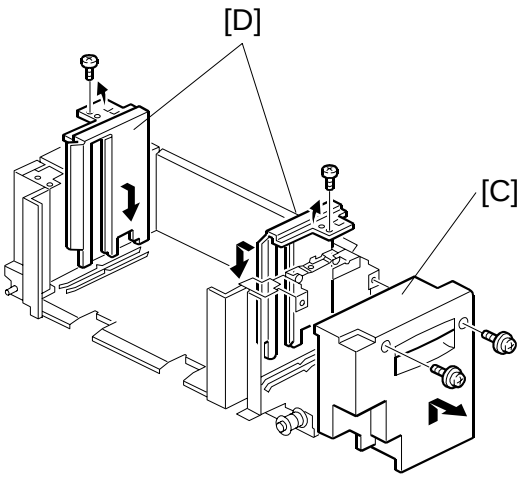

B140R831.WMF

1. Open the front cover.
2. Completely pull out the tandem feed tray [A] to separate the right tandem tray [B] from the left tandem tray.

Right Tray

3. Remove the inner cover [C] (☞ x 2).
4. Re-position the side fences [D] (☞ x 1 each).
   A4: Outer slot position
   LT: Inner slot position
5. Re-install the right tandem inner cover.

Downloaded from www.Manualslib.com manuals search engine

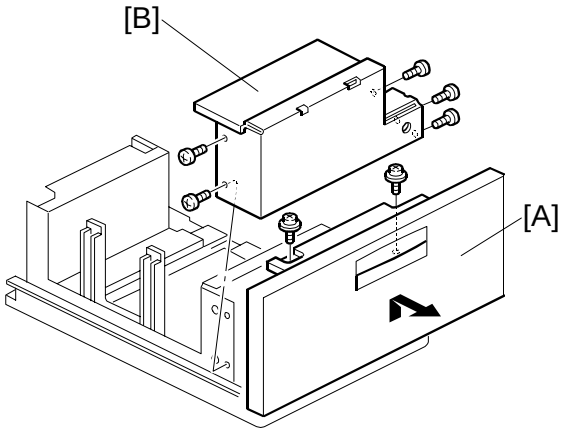

B132R624.WMF

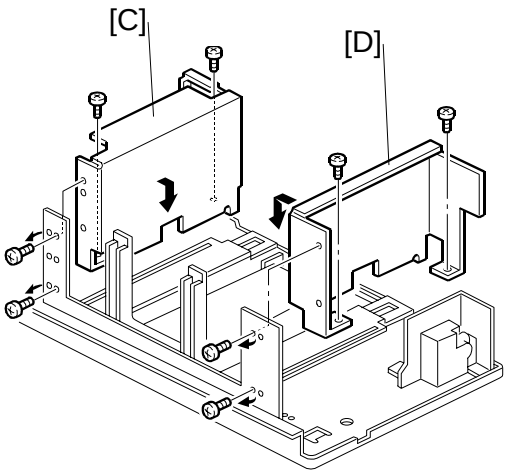

B140R834.WMF

Left Tray

6. Remove the tray cover [A] (☞ x 2).
7. Remove the DC motor cover [B] (☞ x 5).
8. Remove the rear side fence [C] and front side fence [D] (☞ x 4 ea.)
9. Re-position the side fences (☞ x 4 ea.).
   A4: Outer slot position
   LT: Inner slot position
10. Re-install the DC motor cover and the tray cover.

Downloaded from www.Manualslib.com manuals search engine

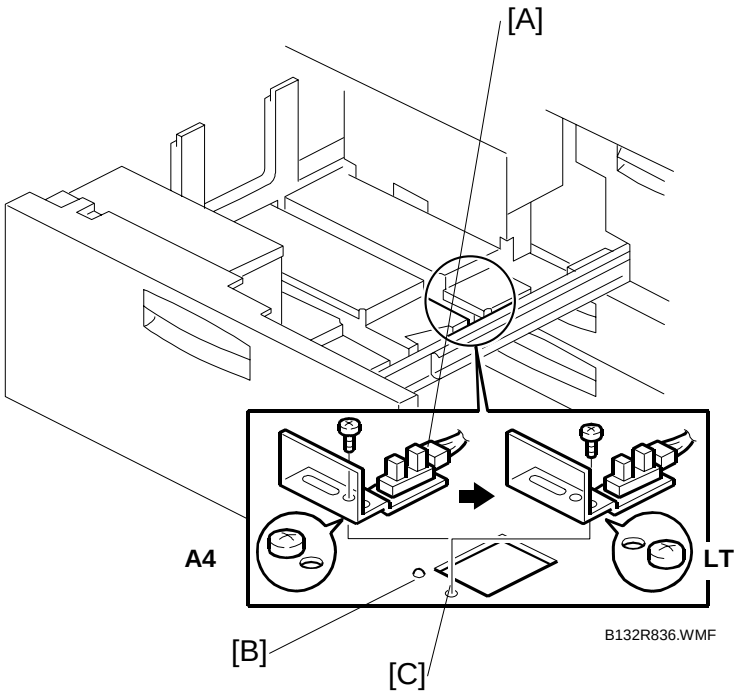

11. Re-position the return position sensor bracket [A] (x 1).
    - For A4 set the screw in the left hole [B].
    - For LT set the screw in the right hole [C].
12. Input the new paper size into **SP5959 001**.

Reinstallation

- Do the scanner and registration adjustments (see section 3.19.1, 3.19.3).

Downloaded from www.Manualslib.com manuals search engine

3.12 PAPER FEED (TRAYS 2, 3)

3.12.1 PICK-UP, FEED, SEPARATION ROLLERS

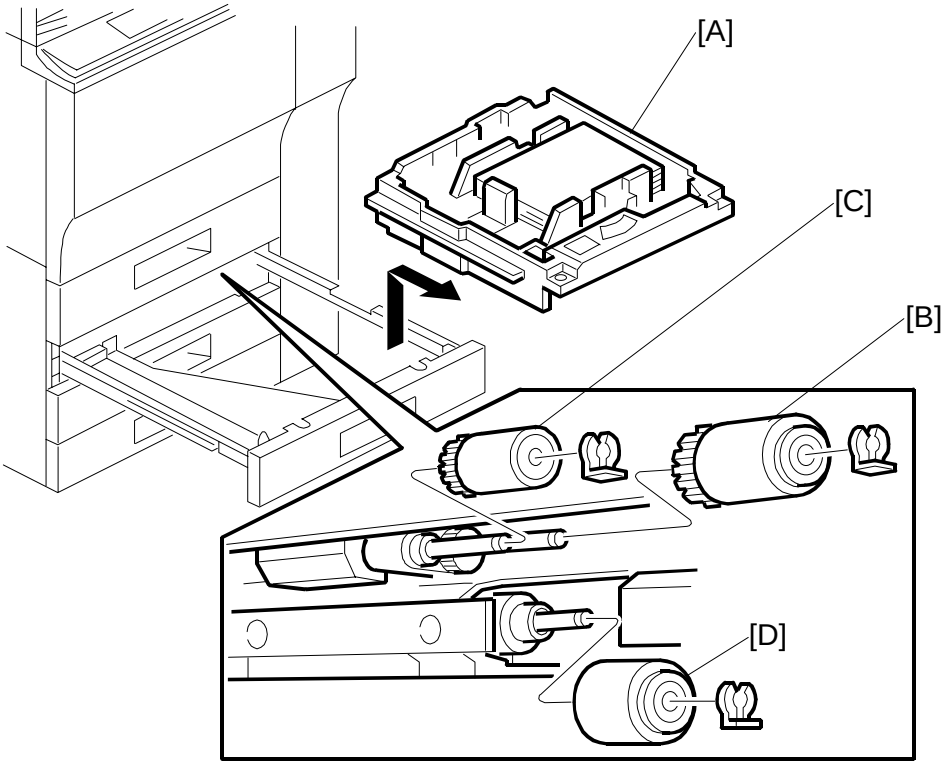

B132R601.WMF

[A]: Remove the tray.
[B]: Feed roller (x 1)
[C]: Pick-up roller (x 1)
[D]: Separation roller (x 1)

Important

- The operation of the FRR mechanisms for the tandem tray (Tray 1), universal trays (Tray 2, Tray 3), bypass tray, and ARDF are similar. However, the only rollers that are interchangeable are the tandem and universal tray rollers (Trays 1, 2, 3).
- Do not touch the surface of new rollers during replacement.

Downloaded from www.Manualslib.com manuals search engine

3.12.2 FEED UNIT

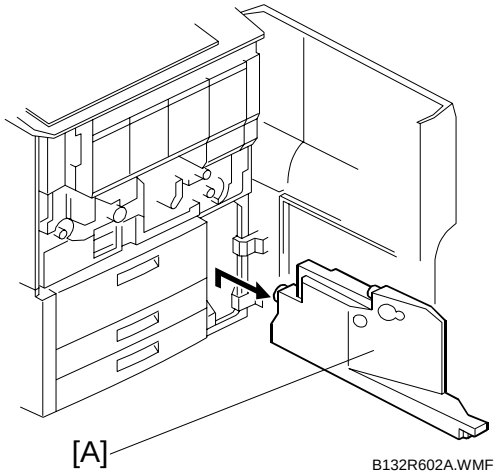

B132R602A.WMF

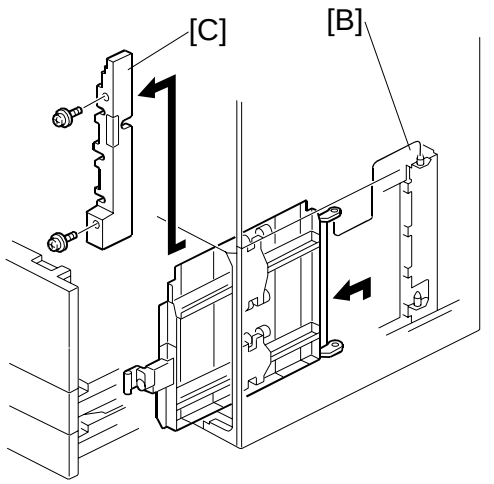

B132R603A.WMF

Remove:

- Front door (☛3.2.4)
- If the LCT is connected, disconnect it and pull it away from the machine.
- LCT entrance guide cover and right lower cover

Pull out all three trays (do not remove).

[A]: Toner collection bottle
[B]: Vertical transport guide
[C]: Inner cover (🖉 x 2)

NOTE: When re-installing the vertical transport guide, remove the lower right cover then insert from it.

Downloaded from www.Manualslib.com manuals search engine

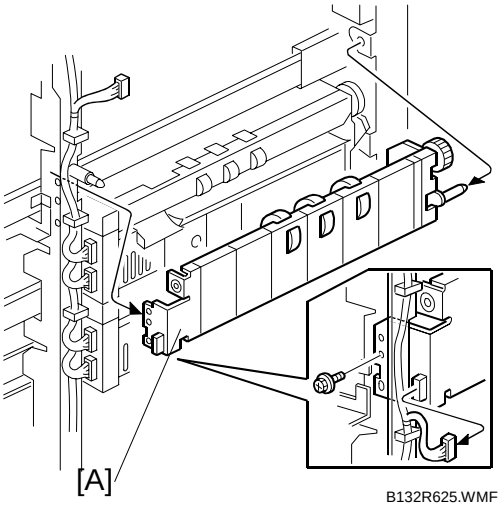

B132R625.WMF

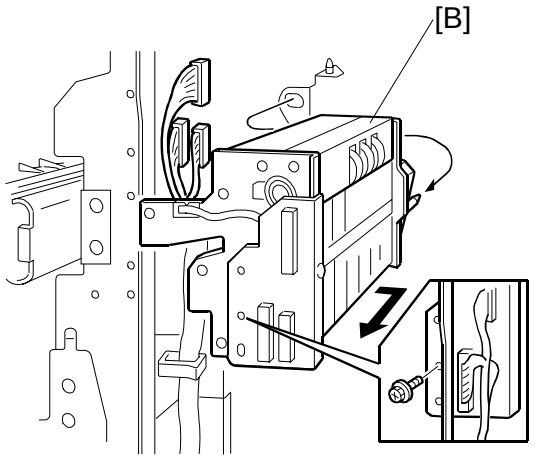

B132R604.WMF

[A]: Guide plate (🔩 x 1)
- 1st feed unit only.

[B]: Feed unit (🔩 x 1, ✋ x 3)
- Insert your hand from the right and pull the feed unit forward.

NOTE: To avoid hitting the unit on the sides of the machine, remove it carefully and slowly.

Important: If the paper feed motor must be replaced, replace the feed unit.

Downloaded from www.Manualslib.com manuals search engine

3.12.3 SEPARATION ROLLER PRESSURE ADJUSTMENT

The position of the drive gear for the separation roller can be changed in order to change the amount of pressure exerted by the separation roller. This adjustment can be done:

- When feeding special paper, especially thick paper
- When the customer is experiencing feed problems

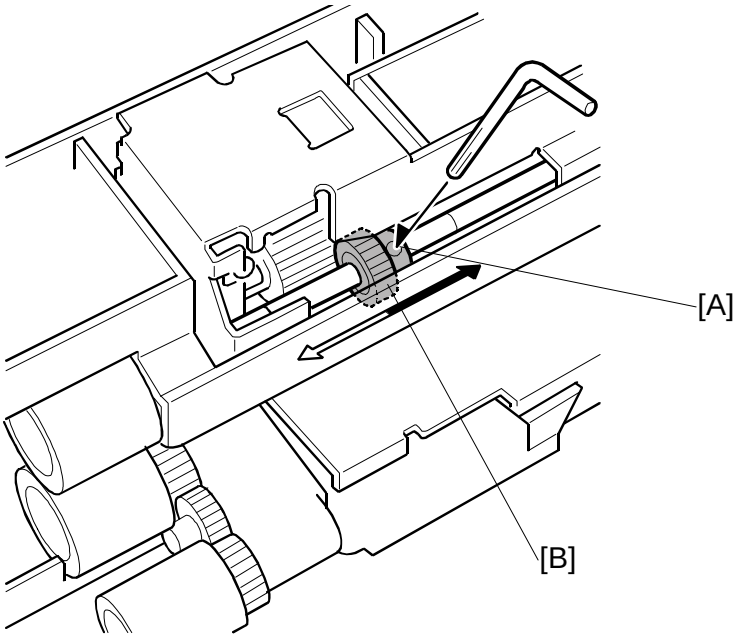

B132R605.WMF

1. Remove the feed unit (☛3.12.2)
2. Loosen the hex screw [A].
3. The separation roller gear [B] is positioned at the groove before shipping.
   To adjust for thick paper, move the separation roller gear to the left to decrease the pressure.

   -or-

   To correct misfeeds, move the separation roller gear to the right to increase the pressure.

Downloaded from www.Manualslib.com manuals search engine

3.12.4 PAPER END, TRAY LIFT, PAPER FEED SENSORS

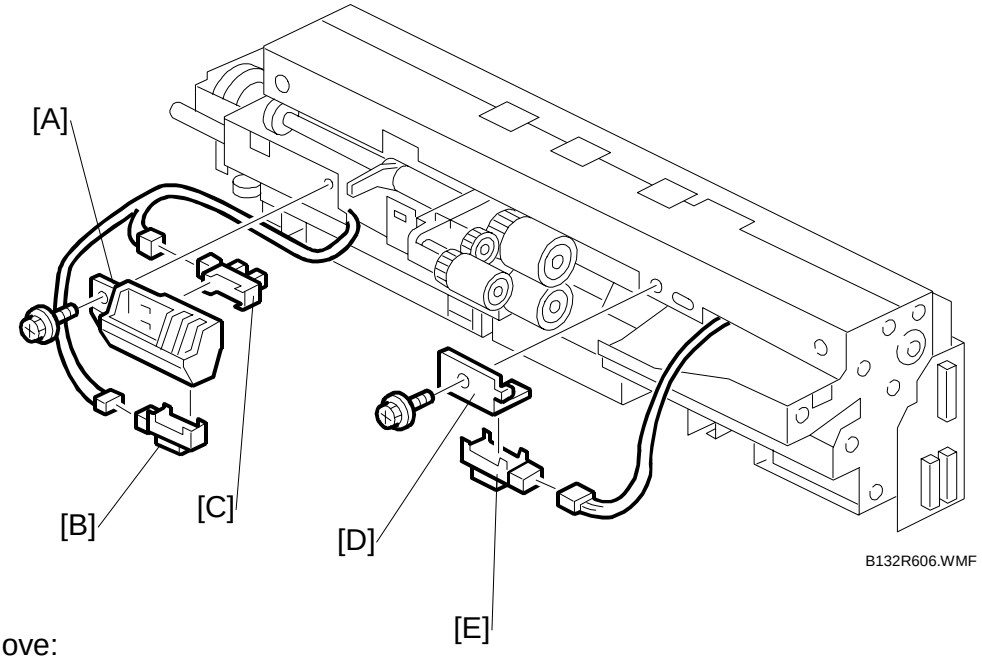

Remove:

- Feed unit (☛3.12.2)

[A]: Sensor bracket (☞ x1)
[B]: Paper end sensor (☞ x1)
[C]: Tray lift sensor (☞ x1)
[D]: Sensor bracket (☞ x1)
[E]: Paper feed sensor (☞ x1)

Downloaded from www.Manualslib.com manuals search engine

3.12.5 VERTICAL TRANSPORT SENSOR

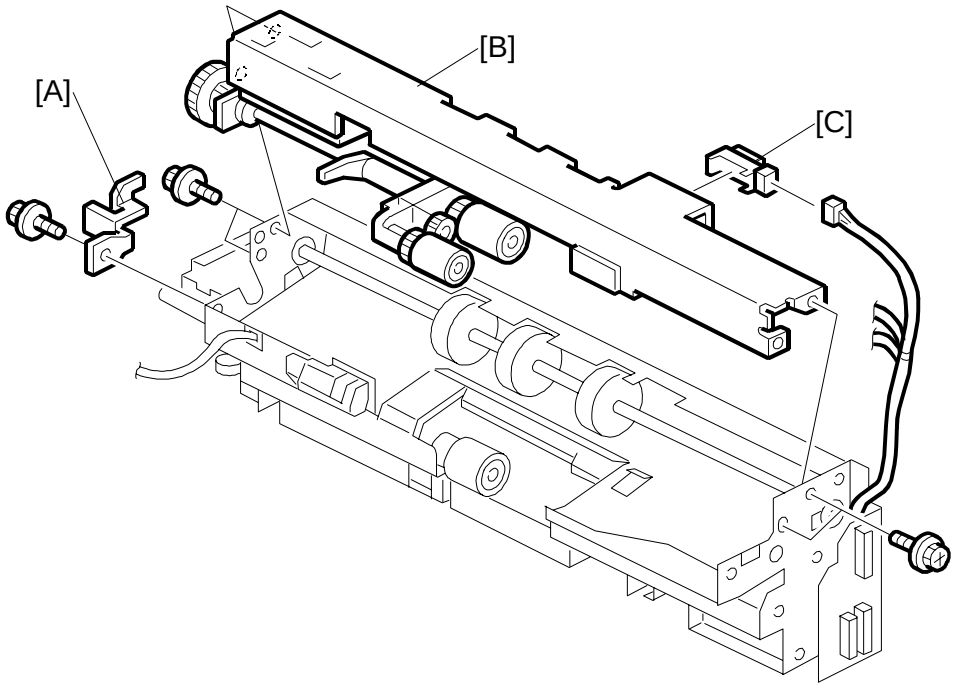

B132R607.WMF

Remove:

- Feed unit (☛3.12.2)

[A]: Bracket (x1)
[B]: Upper unit (x4)
[C]: Vertical transport sensor (x1)

Downloaded from www.Manualslib.com manuals search engine

3.13 BYPASS UNIT

3.13.1 BYPASS PICK-UP, FEED, SEPARATION ROLLER

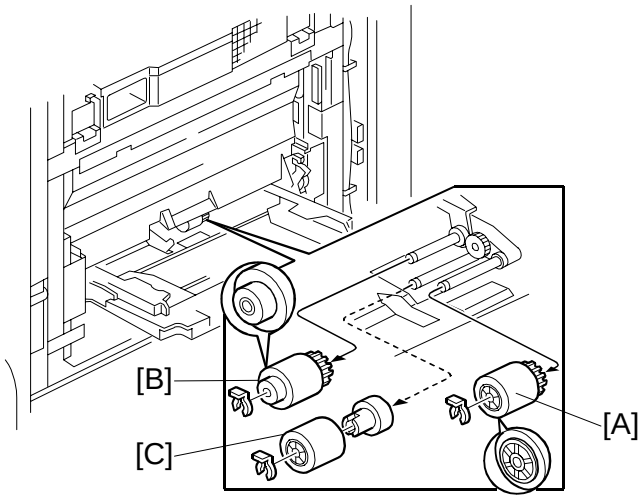

B132R601A.WMF

- Remove right covers (☛3.2.5)
- Open the bypass tray
- Remove the bypass unit (☛3.13.3)
- Remove the upper unit cover (☛3.13.4)

Remove:

[A]: Pick-up roller (x1)
[B]: Feed roller (x1)
[C]: Separation roller (x1)

Downloaded from www.Manualslib.com manuals search engine

3.13.2 BYPASS AUTO PAPER SIZE DETECTION SWITCHES

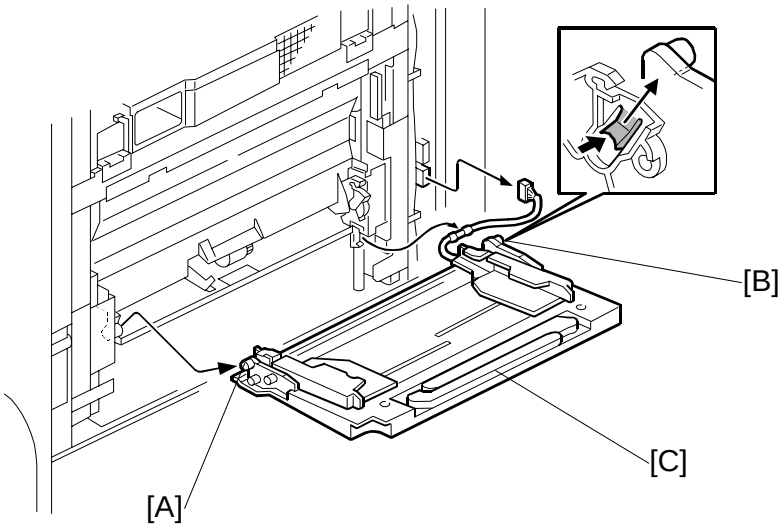

B132R610.WMF

- Remove right covers (☛3.2.5)
- Open the bypass tray

Disconnect:

[A]: Front hinge
[B]: Rear hinge

Remove:

[C]: Bypass tray (x1)
[D]: Bypass table (x2, Pawls x2)
[E]: Paper size detection board (Pawl x1, x1)

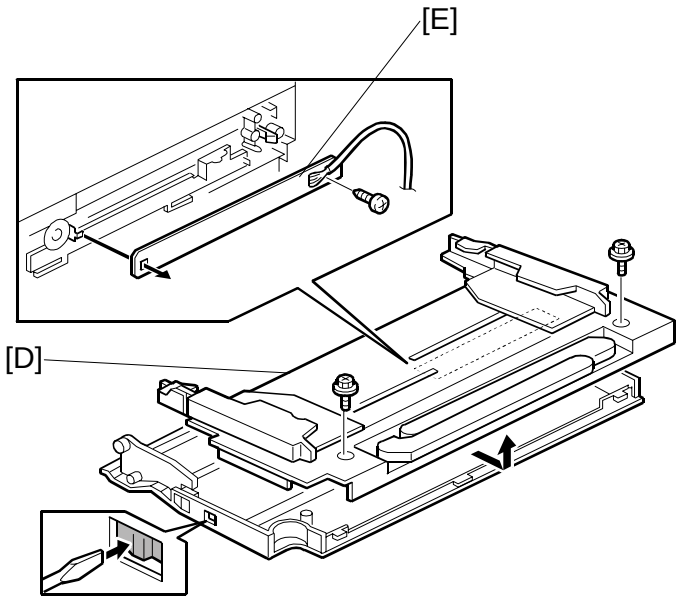

B132R611.WMF

Downloaded from www.Manualslib.com manuals search engine

3.13.3 BYPASS UNIT

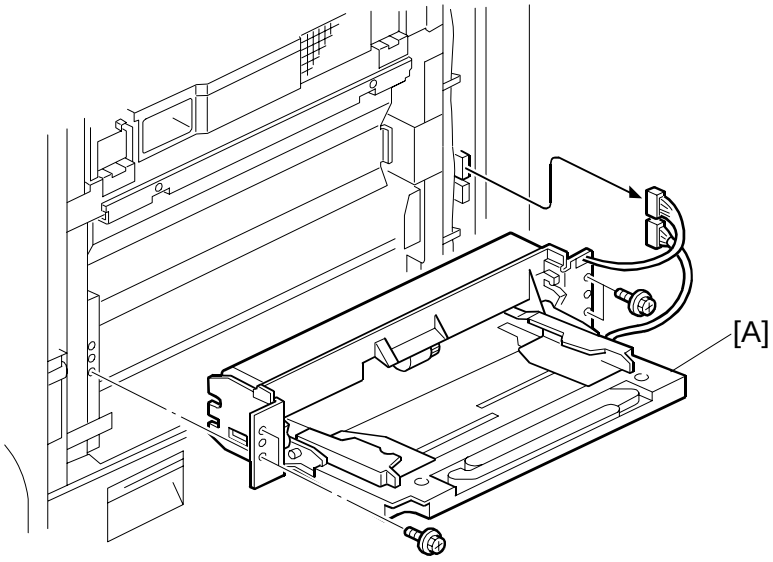

B132R626.WMF

- Remove right covers (☛3.2.5)
- Open the bypass tray

Remove:

[A]: Bypass unit (x4, x2)

Downloaded from www.Manualslib.com manuals search engine

3.13.4 BYPASS PAPER END SENSOR, FEED SENSOR

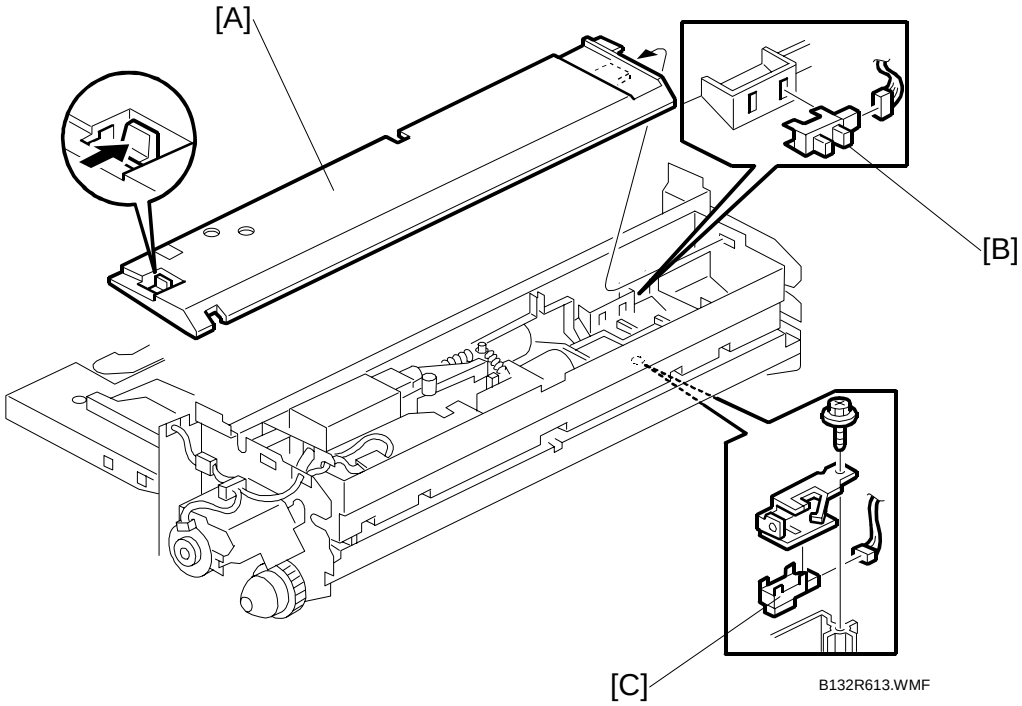

Remove:

- Bypass unit (☛3.13.3)

[A]: Unit upper cover (Release x1)
[B]: Bypass paper end sensor (☞ x1)
[C]: Feed sensor (☞ x1, ☞ x1)

Downloaded from www.Manualslib.com manuals search engine

3.13.5 BYPASS FEED CLUTCH

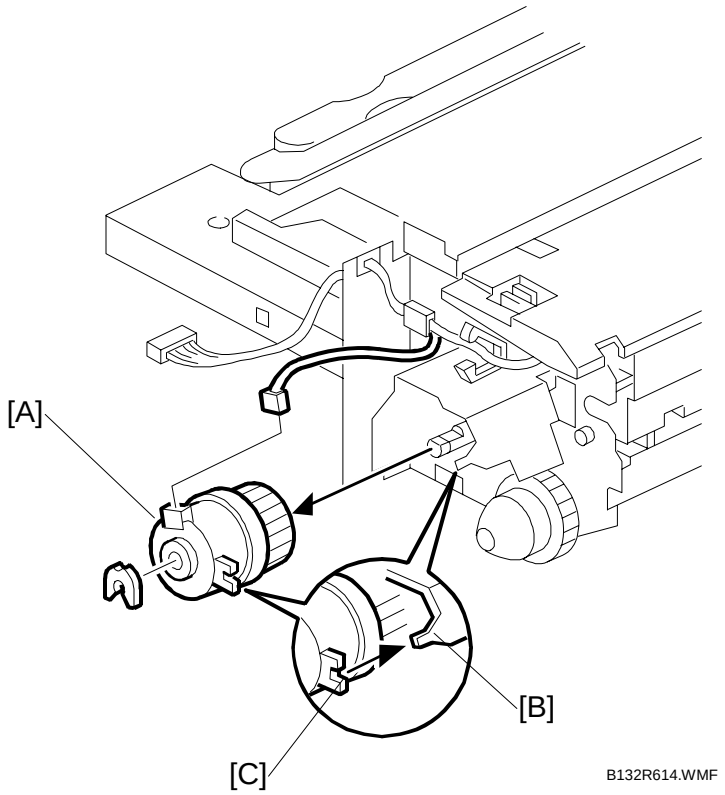

Remove:

- Bypass unit (☛3.13.3)

[A]: Bypass feed clutch (x1, x1)

Reinstallation

- Make sure the arm [B] fits correctly into the notch bracket [C] of the clutch.

Downloaded from www.Manualslib.com manuals search engine

3.14 BOARDS

3.14.1 CONTROLLER UNIT

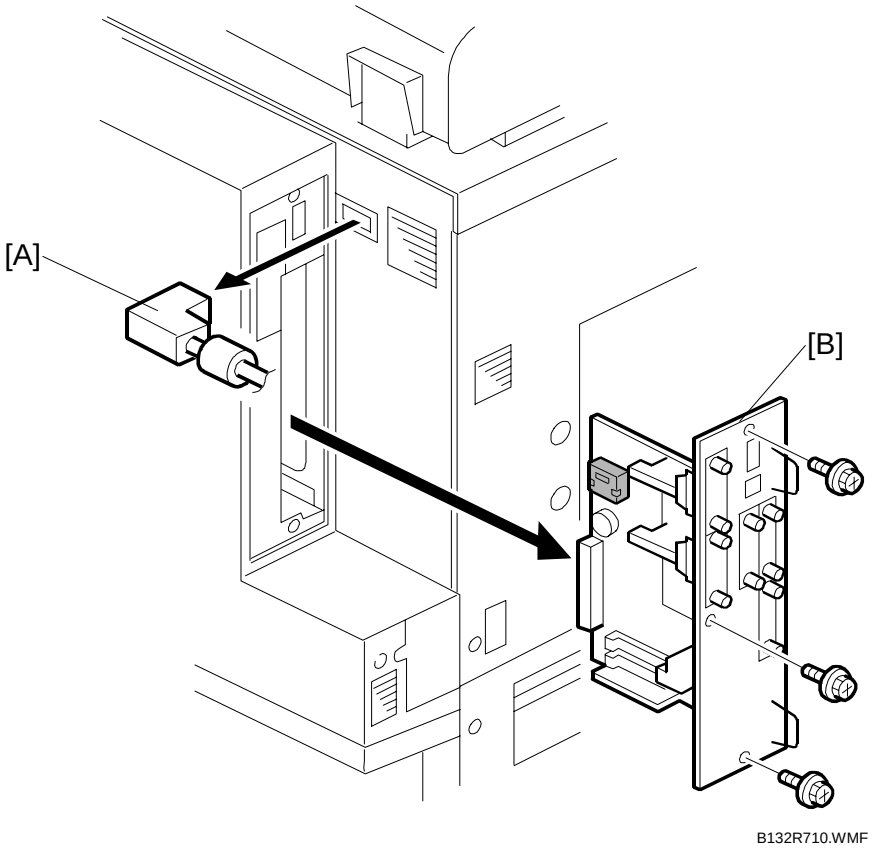

⚠CAUTION
Before you start this procedure, turn off the main power switch and disconnect the power cord.

Remove

[A]: Disconnect the ARDF

[B]: Controller unit (x3)

Downloaded from www.Manualslib.com manuals search engine

3.14.2 CONTROLLER BOARD, 256 MB MEMORY, NVRAM

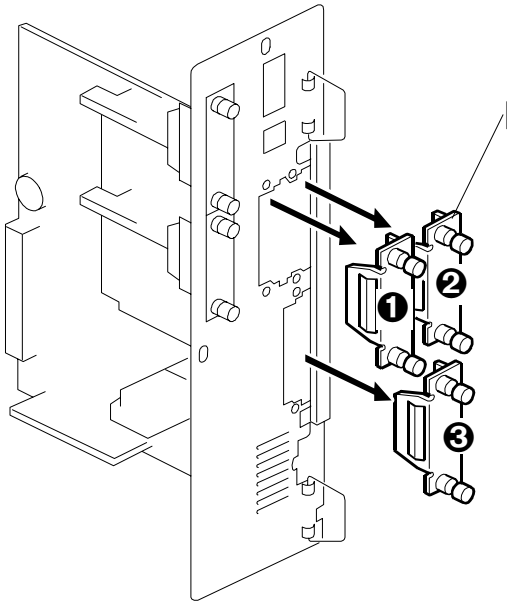

B132R711.WMF

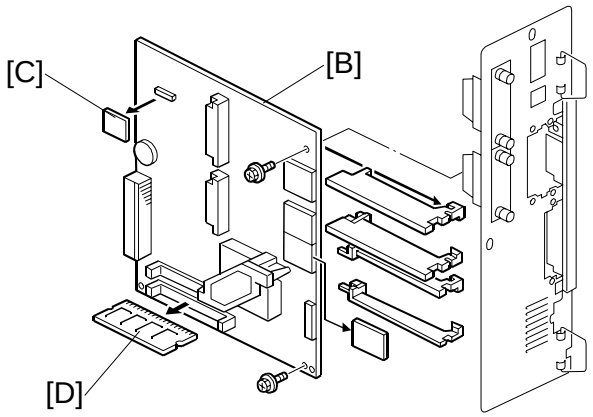

B132R712.WMF

Important:

- If you are going to replace the NVRAM, follow the procedure on the next page and refer to these illustrations as necessary.
- Do not remove the NVRAM until you have uploaded is contents. (For more, see the procedures on the following page.)
- Always touch a metal surface to discharge any static on your hands before you touch the controller board.
- Work carefully when removing the NVRAM to avoid damaging other components on the controller board or short circuiting the pins of other chips.

[A]: Options slot covers ❶, ❷, ❸ (🔩 x 2 each)
[B]: Controller board (🔩 x 2) (☛3.14.1)
[C]: NVRAM (Pawls x2)
[D]: 256 MB memory

Reinstallation

- If you replace the controller board, put the memory and NVRAM from the old controller board onto the new controller board.

Downloaded from www.Manualslib.com manuals search engine

3.14.3 NVRAM REPLACEMENT

Upload NVRAM Data → SD Card

1. Do **SP5990 001** to print the SMC report.
2. Turn the copier main power switch off.
3. Insert an SD card in **Slot 3**
4. Execute **SP5824** to upload the data to the SD card.
5. Switch the machine off and disconnect the power cord.

Replace NVRAM

1. Remove the NVRAM (☛3.14.2).
2. Install the new NVRAM.

Restore NVRAM Data to the New NVRAM

1. Turn the copier main power switch off.
2. Put the SD card with the NVRAM data into **Slot 3**.
3. Open the front door of the copier and keep it open.
4. Turn the copier main power switch on.
   If the NVRAM is new, **SC195** (Machine Serial Number Error) may appear. If this occurs:
   - Enter the SP mode and do **SP5801 001** to reset the memory to the defaults (All).
   - Switch the machine off/on and start from Step 1.

   Important! WHEN SC195 OCCURS, THE SERIAL NUMBER MUST BE INPUT. PLEASE CONTACT YOUR TECHNICAL SUPERVISOR.
5. Execute **SP5825** to download the data uploaded from the old NVRAM.
   NOTE: If the machine returns **SC195** (Machine Serial Number Error), ignore it.
6. Switch the machine off and remove the SD card from **Slot 3**.
7. Switch the machine on, then do **SP5990 001** to print another SMC report.
8. Compare this new SMC report with the report you printed in Step 1. If any of the SP settings are different, enter the SP settings of the first report.
9. Execute **SP5907** and enter the brand and model name of the machine for Windows Plug & Play capability.

Downloaded from www.Manualslib.com manuals search engine

3.14.4 CONTROLLER BOX COVER, BICU, IOB

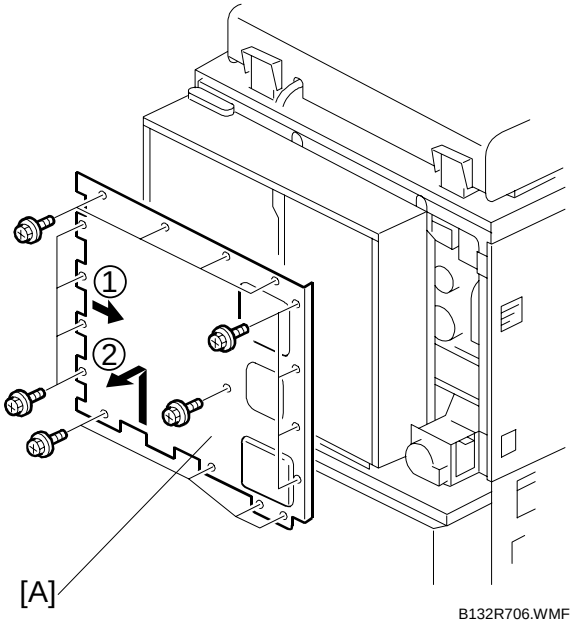

B132R706.WMF

Remove:

- Rear covers (☛3.2.6)

[A]: Controller box cover (🔩 x17)
[B]: IOB (✋ x20, 🔩 x9)
[C]: BICU (✋ x11, 🔩 x9)

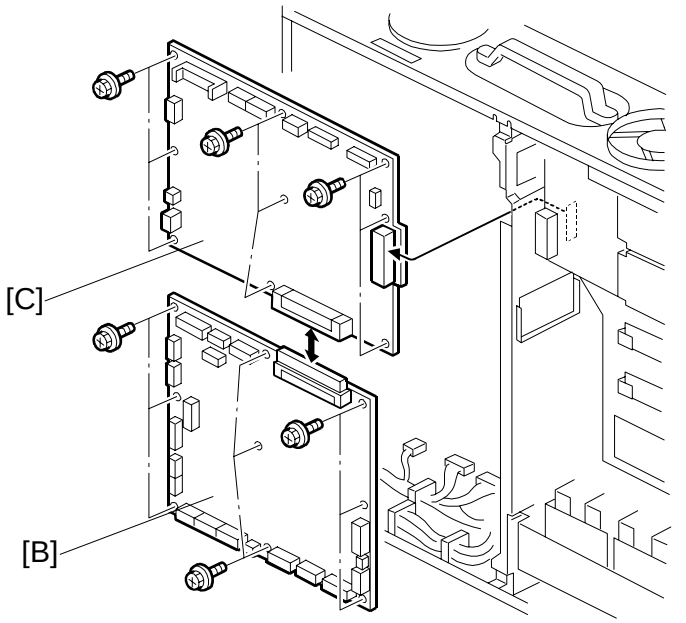

B132R714.WMF

Downloaded from www.Manualslib.com manuals search engine

NOTE: When you replace the BICU, make sure that the DIP switches are set to the correct positions.

- **120V machines: Make sure only DIP switch #1 is ON.**
- 220/230/240V machines: Make sure only DIP switch #2 is ON.

Example: A 220/230/240V machine (only DIP SW #2 is ON, the others are OFF).

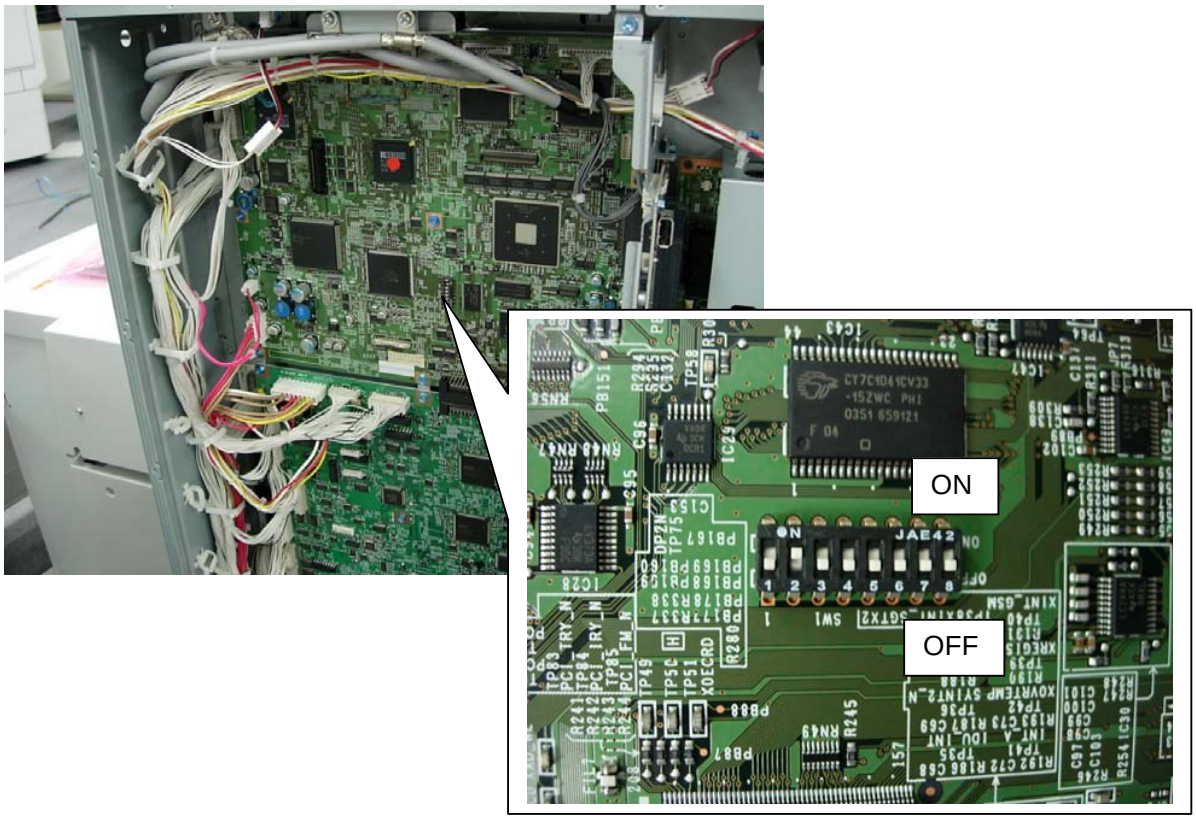

Downloaded from www.Manualslib.com manuals search engine

3.14.5 RDS BOARD, JUMPER

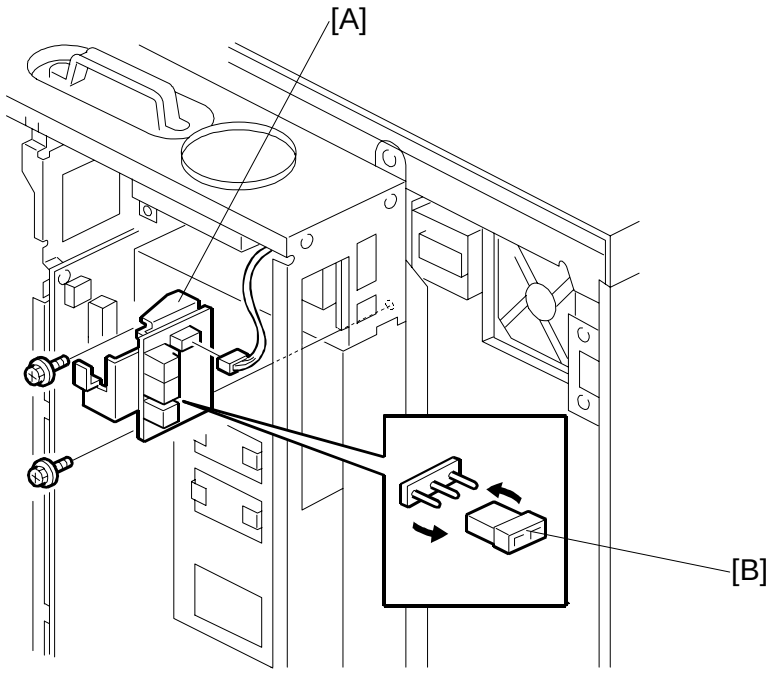

B132R709.WMF

Remove:

- Controller unit (☛3.14.1)
- Interface board (☛3.14.6)

[A]: RDS board (🔩 x, ✋ x)
[B]: Jumper

Downloaded from www.Manualslib.com manuals search engine

3.14.6 INTERFACE BOARD, MOTHER BOARD

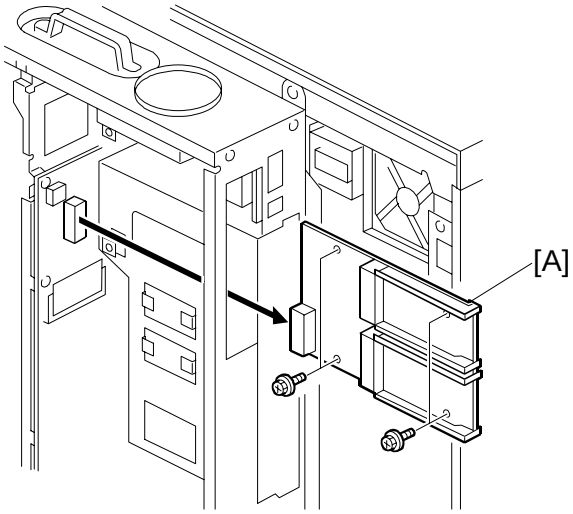

B132R708.WMF

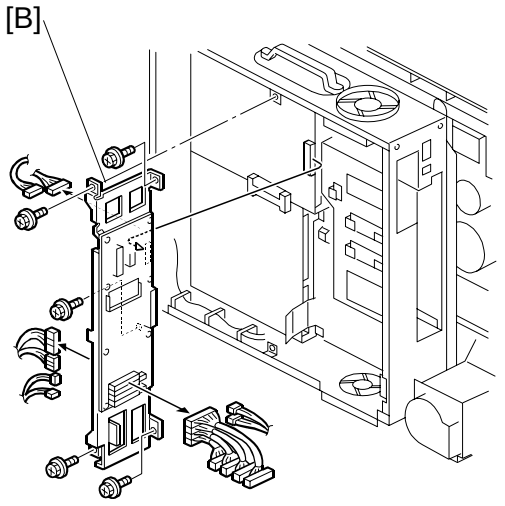

B132R713.WMF

1. Remove the controller unit. (☛3.14.4)
2. Remove the RAPI EXT board [A] (x4)
3. Remove the HDD. (☛3.15)
4. Remove the mother board [B] (x5, x12)

Downloaded from www.Manualslib.com manuals search engine

3.14.7 HVPS, PFC BOARD

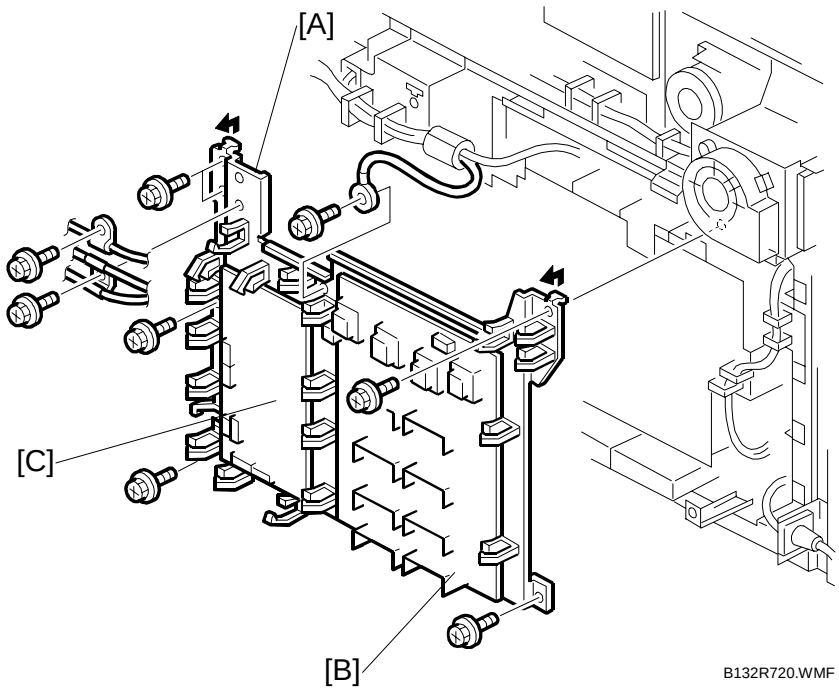

- Remove the rear lower cover (☛3.2.6)

Remove:

[A]: HVPS and PFC board assembly (x22, x10, x23)
[B]: HVPS (x8)
[C]: PFC board (x6)

Downloaded from www.Manualslib.com manuals search engine

3.14.8 PSU

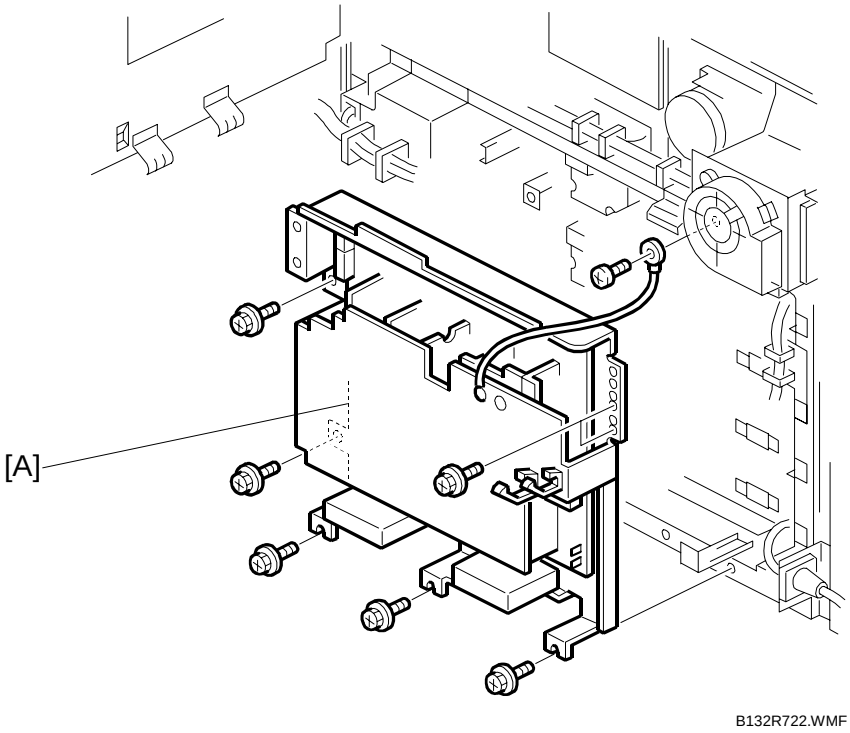

- Remove the rear covers (☛3.2.6)

Remove:

- HVPS, PFC board assembly (☛3.14.7)

[A]: PSU (✋ x7, 🔧 x8)

Downloaded from www.Manualslib.com manuals search engine

3.14.9 AC DRIVE BOARD

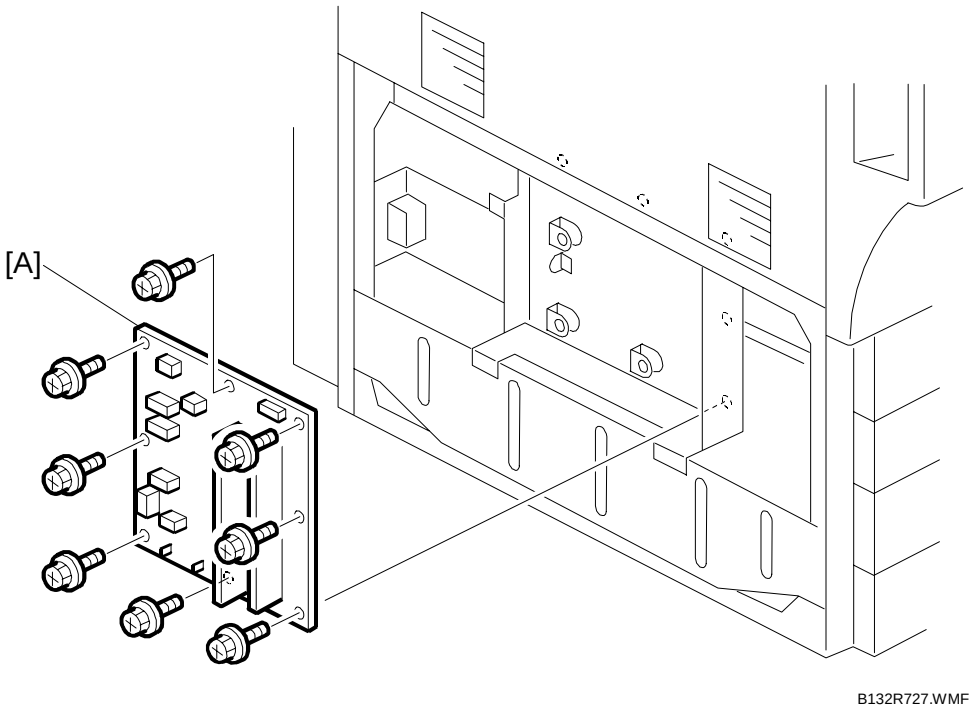

- Remove left lower cover. (☛3.2.3)

[A]: AC drive board (🔩 x8, 🖐 x6)

Downloaded from www.Manualslib.com manuals search engine

3.14.10 TRANSFER MOTOR, DRIVE, DRIVE MOTOR BOARDS

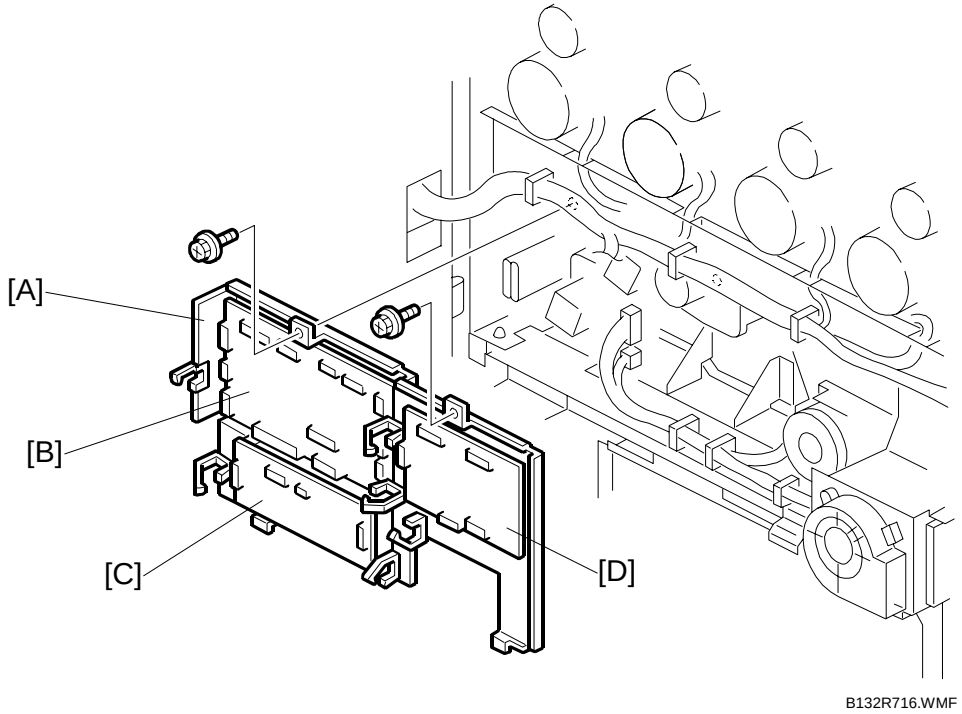

- Remove rear covers (☛3.2.6)
- Open and lock the controller box (☛3.2.11)

[A]: Board assembly (x5, x21, x2)
[B]: DRB (Drive Board)
[C]: TMB (Transfer Motor Board)
[D]: DMB (Drive Motor Board)

Downloaded from www.Manualslib.com manuals search engine

3.15 HDD UNIT

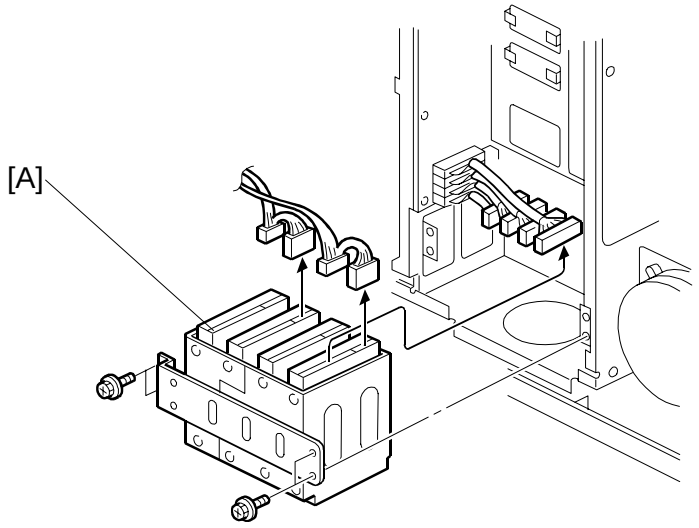

Important

- The HDD unit contains four separate hard disks. However, the four disks are always replaced together as a unit. Never attempt to replace a single disk.

Remove:

- Rear covers (☛3.2.6)
- Controller box cover (☛3.14.4)

[A]: HDD unit (x8, x4)

Important

- Mark the harness connectors before you disconnect them. They must be reconnected at their connection points.

1. Reassemble the machine.
2. Enter the SP mode and do **SP5832 001** to format the hard disks. Formatting on the machine partitions the hard disks properly.
3. Do **SP5853 001** to download the fixed stamps from the ROM to the HDD.
4. Switch the machine off and on to enable the fixed stamps for use.

Downloaded from www.Manualslib.com manuals search engine

Disposal of HDD Units

- Never remove an HDD unit from the work site without the consent of the client.
- If the customer has any concerns about the security of any information on the HDD, the HDD must remain with the customer for disposal or safe keeping.
- The HDD may contain proprietary or classified (Confidential, Secret) information. Specifically, the HDD contains document server documents and data stored in temporary files created automatically during copy job sorting and jam recovery. Such data is stored on the HDD in a special format so it cannot normally be read but can be recovered with illegal methods.

Reinstallation

Explain to the customer that the following information stored on the HDD is lost when the HDD is replaced:

- Document server documents
- Fixed stamps
- Document server Address book

The address book and document server documents (if needed) must be input again.

If the customer is using the Data Overwrite Security unit, the Data Overwrite Security function must be set up again. For more, see Section "1. Installation".

Downloaded from www.Manualslib.com manuals search engine

3.16 MOTORS

3.16.1 PCU MOTOR, DRUM MOTOR

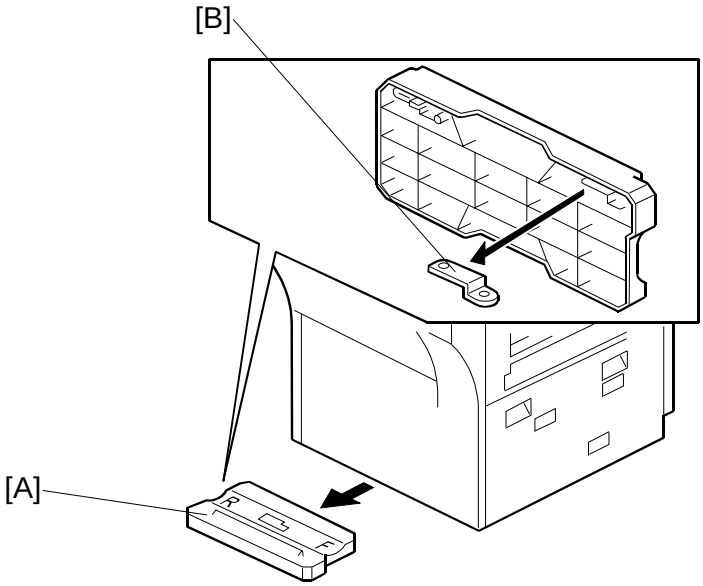

B132I718A.WMF

1. Remove the rear covers. (☛3.2.6)
2. Open and lock the controller box. (☛3.2.11)
3. Remove the PCU stand [A] stored under the machine.
4. Remove the drum motor shaft tool [B] (shorter tool) from the bottom of the PCU stand.

Downloaded from www.Manualslib.com manuals search engine

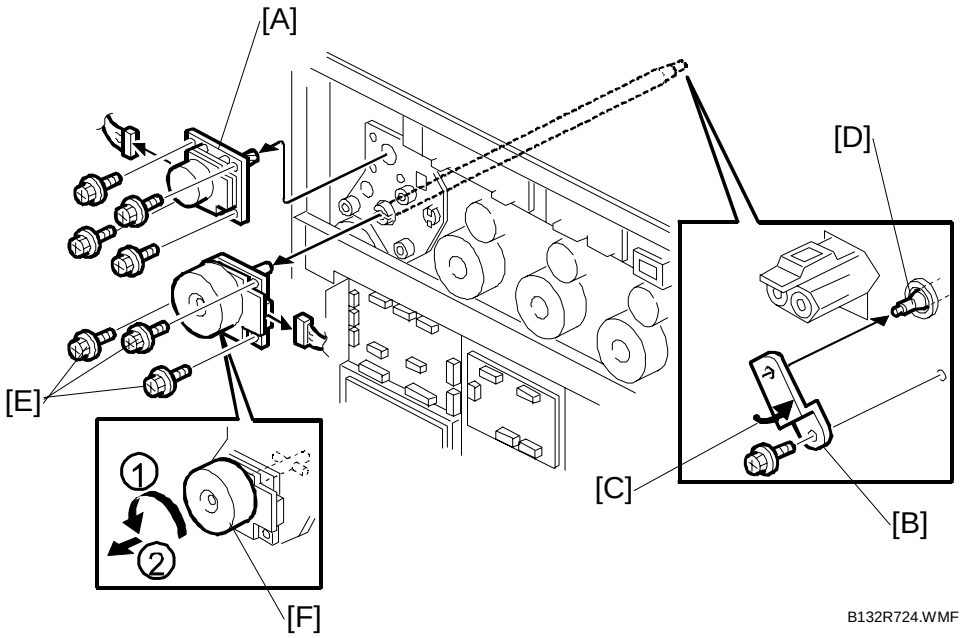

5. Remove the PCU motor [A] (x1, x4).
6. Open the front door.
7. Remove the toner hopper. (☛3.2.7)
   Important: Make sure the toner hopper slide rails are pushed into the machine.
8. At the front of the machine, attach the short tool [B] to the shaft of the drum motor to be removed.
9. Rotate the short tool in the direction of the embossed arrow [C] on the short tool (counter-clockwise) until the holes are aligned.
   NOTE: You must fasten the short tool.
10. Use the M3x9 screw to fasten the screws to lock the shaft [D].
11. Remove the drum motor screws [E] (x3)
12. Turn the drum-motor hub [F] counter-clockwise ① and remove the drum motor shaft.
13. Remove the drum motor ② (x1)

Reinstallation

1. Attach the short tool to the drum shaft and fasten it with the screw.
2. Attach the drum motor.
3. Rotate the drum motor clockwise until it stops.
4. Fasten the three screws to the drum motor.

Downloaded from www.Manualslib.com manuals search engine

3.16.2 PAPER TRANSFER MOTOR

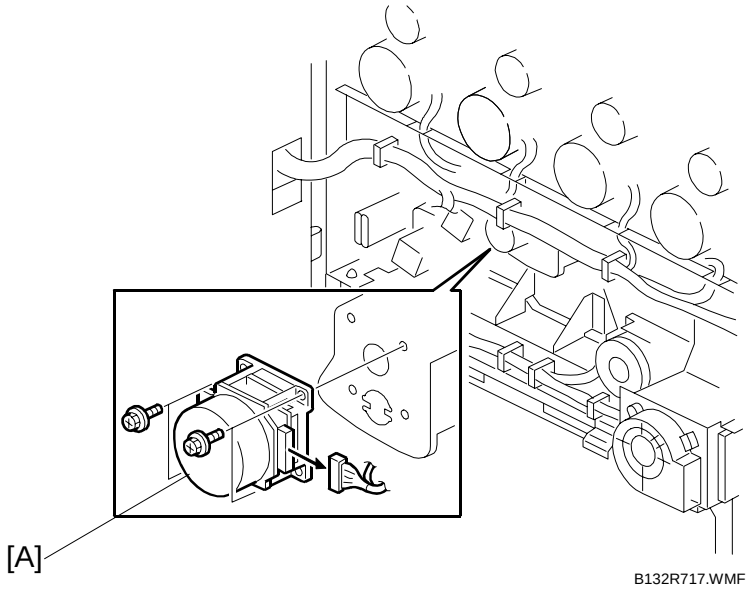

- Remove rear covers (☛3.2.6)
- Open and lock controller box (☛3.2.11)

[A]: Paper transfer motor (🖑 x1, 🪛 x4)

Downloaded from www.Manualslib.com manuals search engine

3.16.3 IMAGE TRANSFER MOTOR

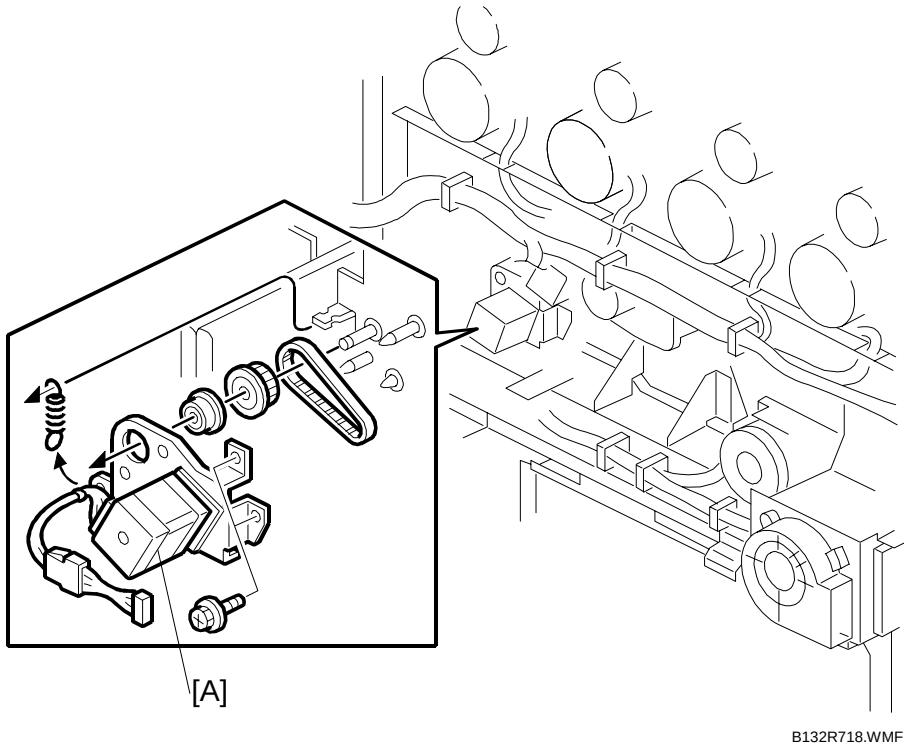

- Remove rear covers (☛3.2.6)
- Open and lock controller box (☛3.2.11)
- Remove the image transfer board assembly (☛3.14.10)

[A]: Image transfer motor (Spring x1, x1, x3, Timing belt x1, Gear x1)

Downloaded from www.Manualslib.com manuals search engine

3.16.4 WASTE TONER TRANSPORT MOTOR, WASTE TONER DISTRIBUTION MOTOR

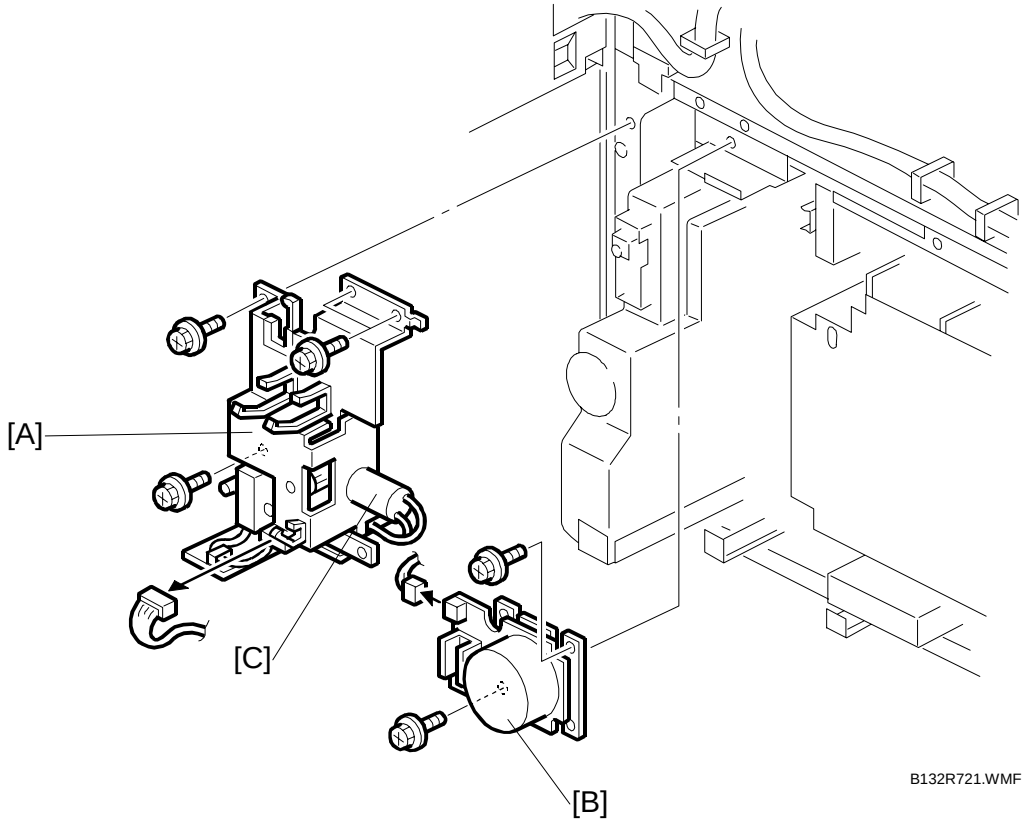

- Remove rear covers (☛3.2.6)
- Open and lock the controller box (☛3.2.11)
- Remove the HVPS and PFC board assembly (☛3.14.7)

[A]: Waste toner motor assembly (x4)
[B]: Waste toner transport motor (x1, x2)
[C]: Waste toner distribution motor (x2, x1)

Downloaded from www.Manualslib.com manuals search engine

3.16.5 BOTTOM PLATE LIFT MOTOR (TRAYS 1, 2, 3)

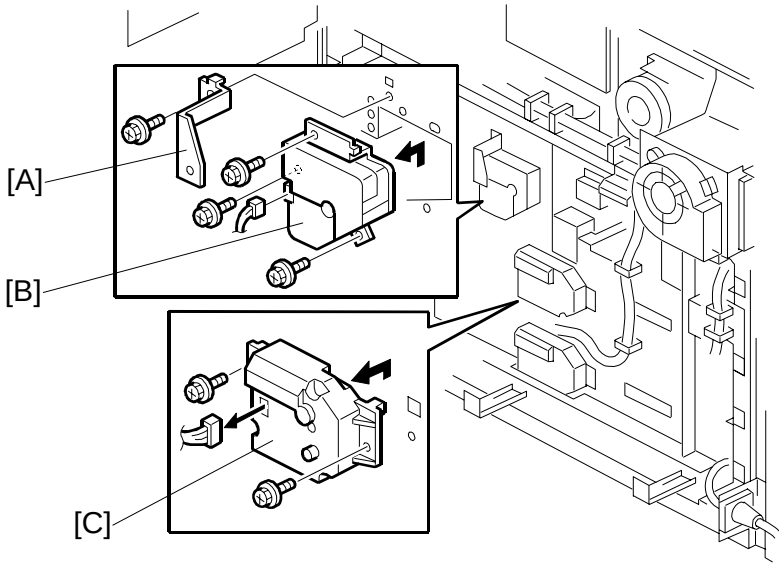

B132R723A.WMF

- Remove the rear covers (☛3.2.6)
- Open the controller box and lock it (☛3.2.11)
- Remove HVPS and PFC board assembly (☛3.14.7)
- Remove PSU (☛3.14.8)

Tray 1

[A]: Bracket (x1)
[B]: Bottom plate lift motor – Tray 1 (x3, x1)

Trays 2, 3

- Remove HVPS and PFC board assembly (☛3.14.7)
- Remove PSU (☛3.14.8)

Remove:

[C]: Bottom plate lift motor – Tray 2, 3 (x1, x2)

Downloaded from www.Manualslib.com manuals search engine

3.16.6 ITB DRIVE MOTOR

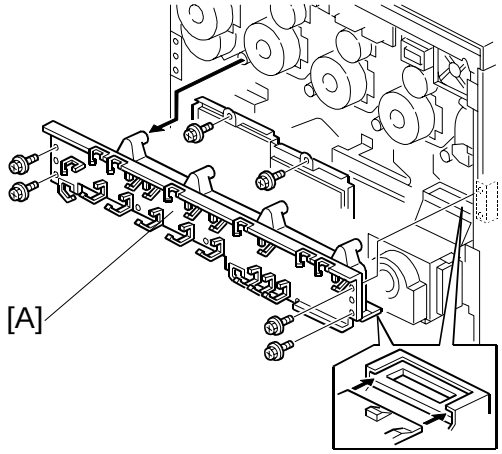

B132R719A.WMF

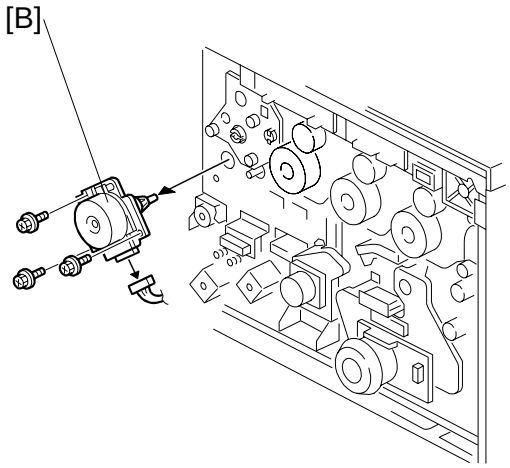

B132R725.WMF

- Remove rear covers (☛3.2.6)
- Open and lock the controller box (☛3.2.11)
- Remove the Transfer board assembly (☛3.14.10)

[A]: Support stay (x21, x1, x4)
[B]: ITB drive motor (x3, x1)

Downloaded from www.Manualslib.com manuals search engine

3.17 AIR FILTERS

3.17.1 TONER HOPPER FILTER

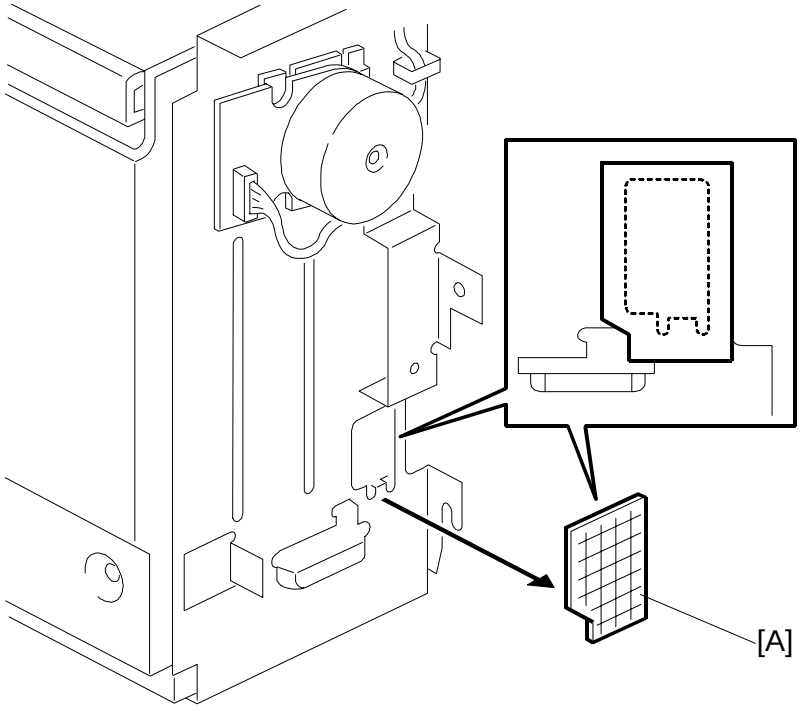

B132R212.WMF

Remove:

- Toner hopper (☛3.2.7)
- Motor cover (☛3.6.5)

[A]: Toner hopper filter

Downloaded from www.Manualslib.com manuals search engine

3.17.2 OZONE FILTER, DUST FILTERS

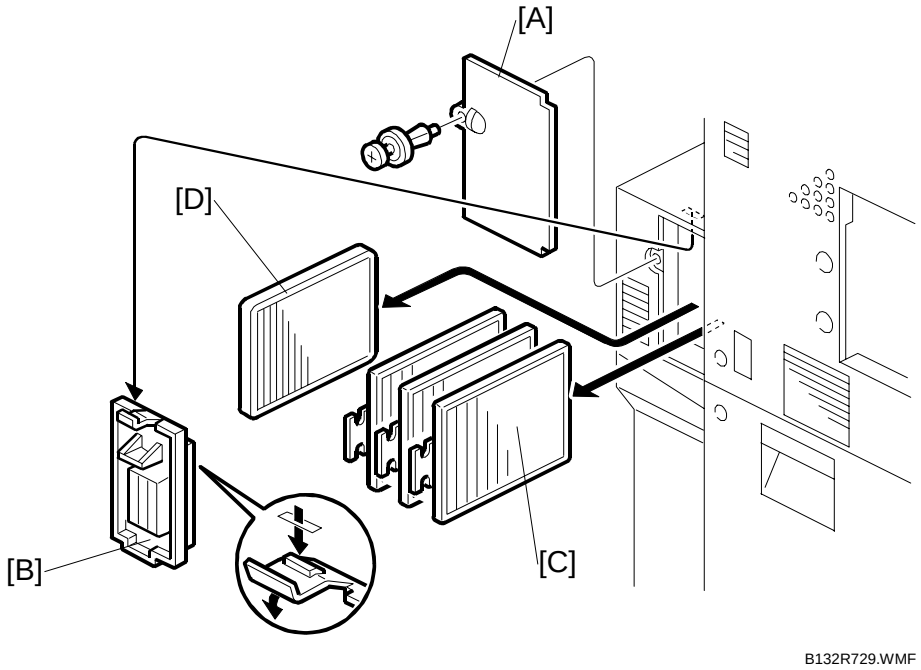

Remove:

[A]: Cover (x1)
[B]: Inner cover
[C]: Dust filters x3
[D]: Ozone filter

Reinstallation

- Make sure you install the filters as shown. If you do not, you cannot reattach the cover [B].

Downloaded from www.Manualslib.com manuals search engine

3.17.3 SCANNER FILTER

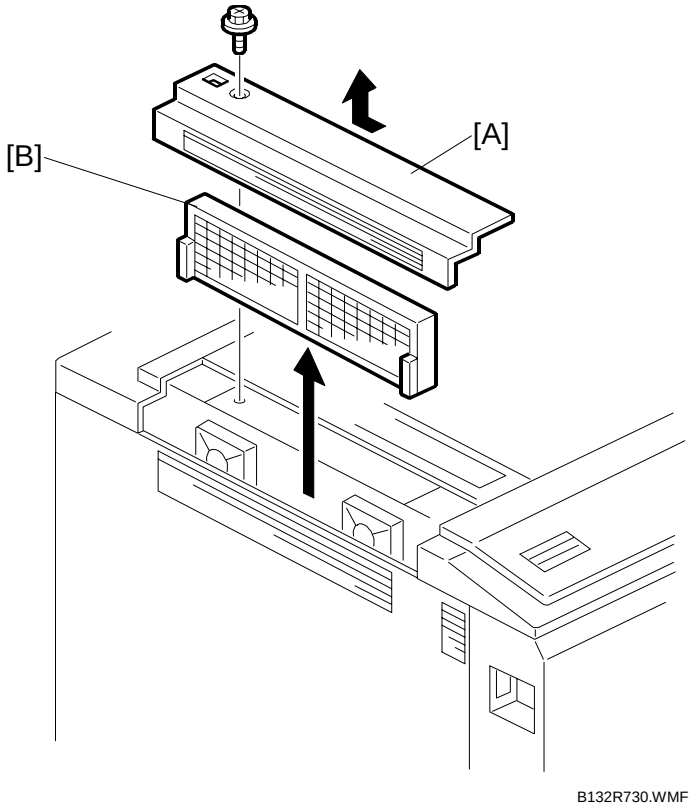

Remove:

[A]: Top left cover (x1)
[B]: Scanner filter

Downloaded from www.Manualslib.com manuals search engine

3.18 ARDF

3.18.1 ARDF COVERS

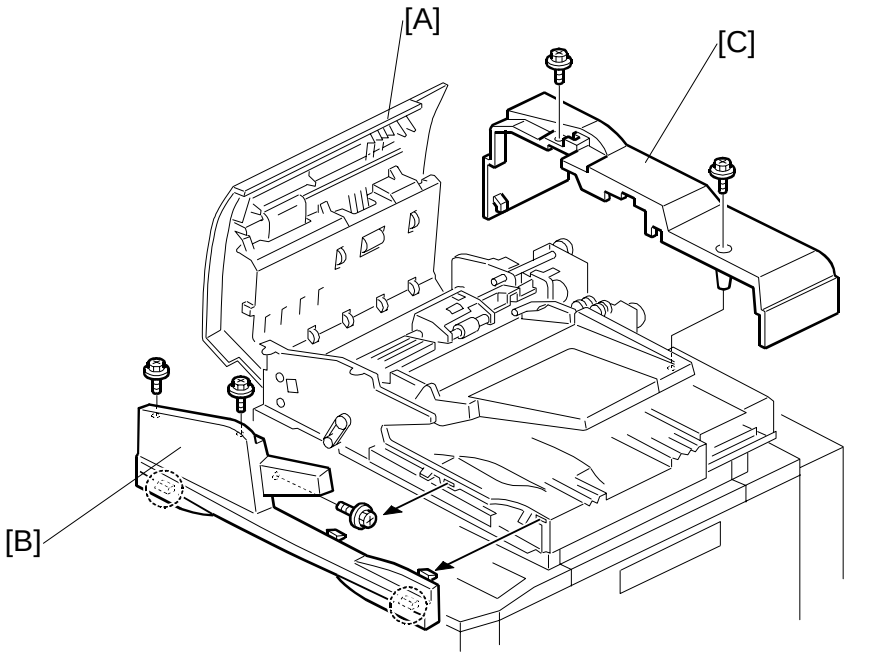

[A]: Open the feed cover.
[B]: Front cover (🔩 x 3, Tabs x4). Press down the tabs.
[C]: Rear cover (🔩 x 2, Tabs x2). Press down the tabs.

Downloaded from www.Manualslib.com manuals search engine

3.18.2 ORIGINAL FEED UNIT

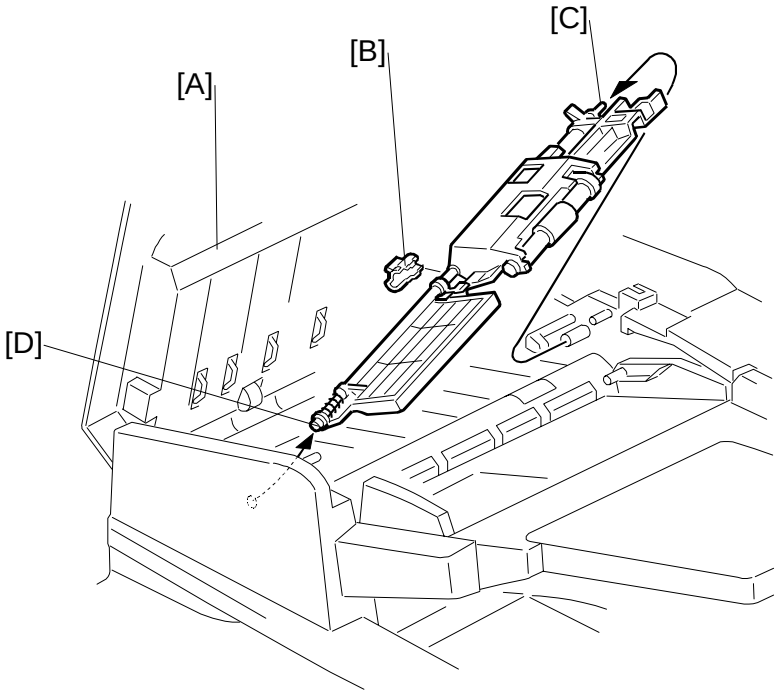

B132R105.WMF

[A]: Open the feed cover.
[B]: Remove the snap fitting.
[C]: Pull toward you slightly to disconnect the rear end of the shaft
[D]: Disconnect the front end of the shaft.

Downloaded from www.Manualslib.com manuals search engine

3.18.3 FEED BELT, PICK-UP ROLLER

Remove:

- Original Feed unit (☛3.18.2)

[A]: E-ring
[B]: Cover
[C]: Slide bushings out

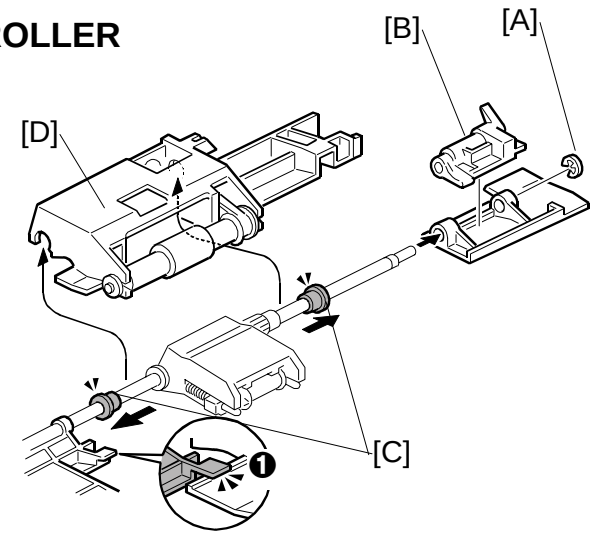

B132R106.WMF

Reassembly

Make sure that the tab ❶ on the front guide plate is above the pick-up roller unit [D].

[E]: Feed belt holder
[F]: Feed belt

NOTE: Remove slowly. Do not let the springs ❶, ❷ fall.

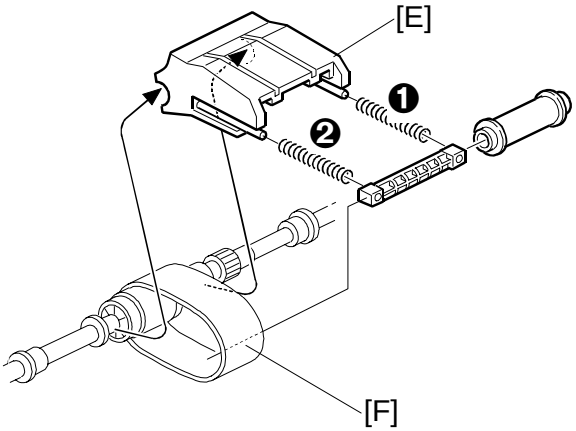

B132R107.WMF

[G]: ARDF pick-up roller

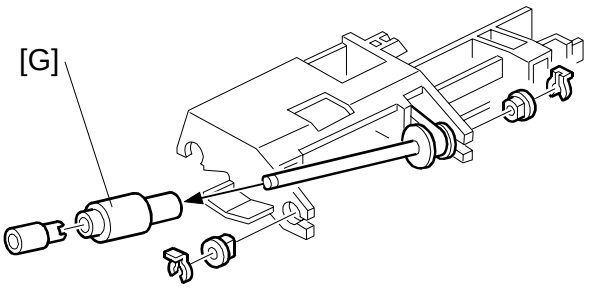

B132R106A.WMF

Downloaded from www.Manualslib.com manuals search engine

3.18.4 BOTTOM PLATE POSITION SENSOR

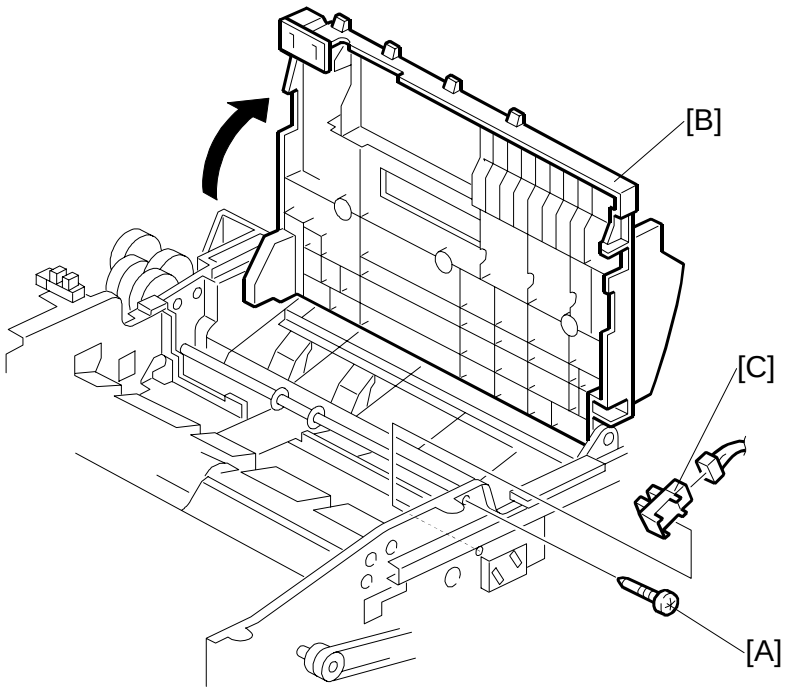

B132R117.WMF

Remove:

- Remove front cover (☛3.18.1)
- Original feed unit (☛3.18.2)

[A]: Pin screw x1
[B]: Raise the bottom plate
[C]: Bottom plate position sensor (☜ x1).

Downloaded from www.Manualslib.com manuals search engine

3.18.5 INTERVAL, ORIGINAL WIDTH, SKEW CORRECTION, SEPARATION SENSORS

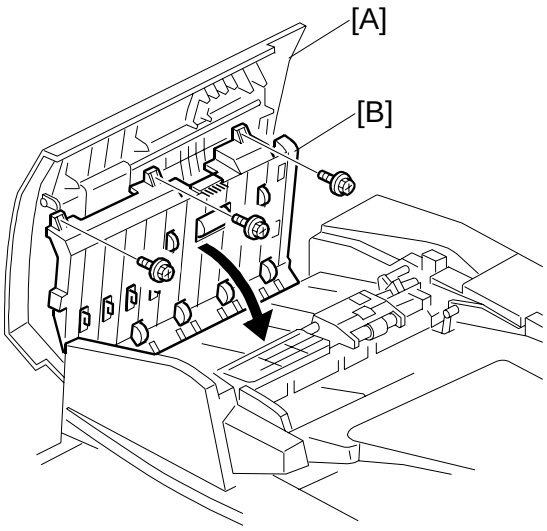

B132R110.WMF

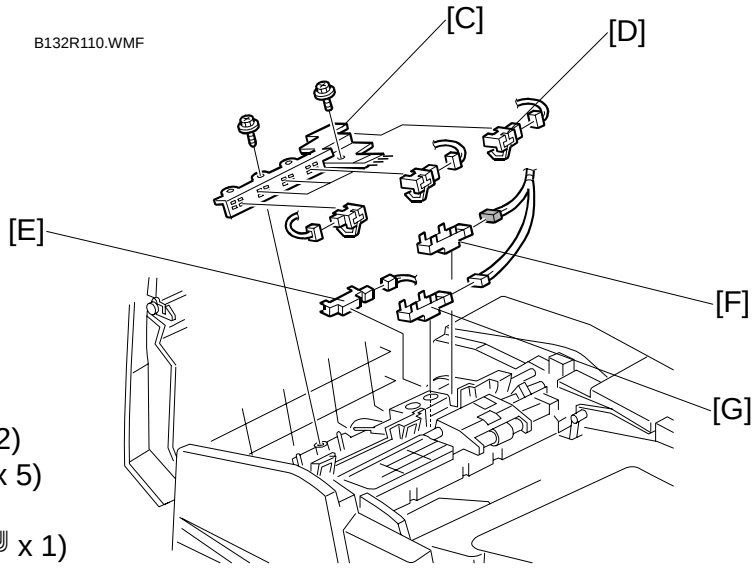

B132R111.WMF

[A]: Open the feed cover.
[B]: Guide plate (x 3).
[C]: Width sensor bracket (x 2)
[D]: Original width sensors (x 5)
[E]: Interval sensor (x 1)
[F]: Skew correction sensor (x 1)
[G]: Separation sensor (x 1)

Downloaded from www.Manualslib.com manuals search engine

3.18.6 ORIGINAL LENGTH SENSORS

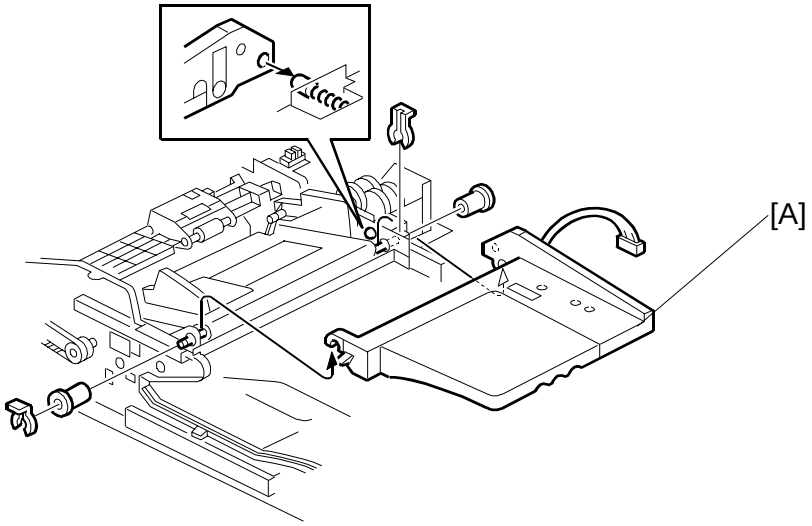

B132R109A.WMF

Remove:

- Front, rear covers (☛3.18.1)
- Clip rings (x2).

[A]: Remove the original tray
[B]: Lower cover (x4)
[C]: Original length sensors:
- ❶ B5 original length (x1)
- ❷ A4 original length (x1)
- ❸ LG original length (x1)

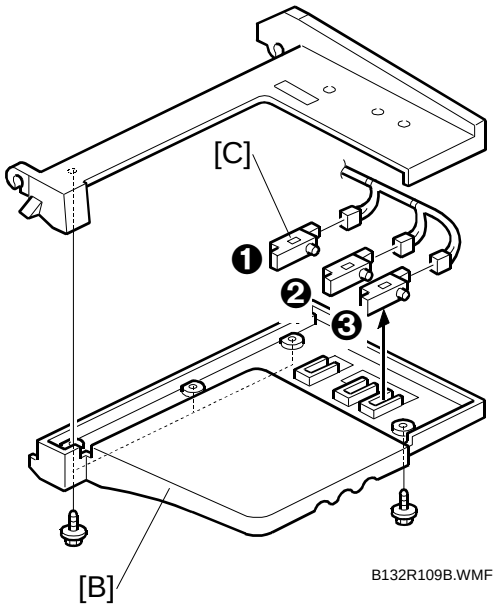

B132R109B.WMF

Downloaded from www.Manualslib.com manuals search engine

3.18.7 FEED COVER, ORIGINAL SET, BOTTOM PLATE, PICK-UP ROLLER HP, UPPER INVERTER SENSORS

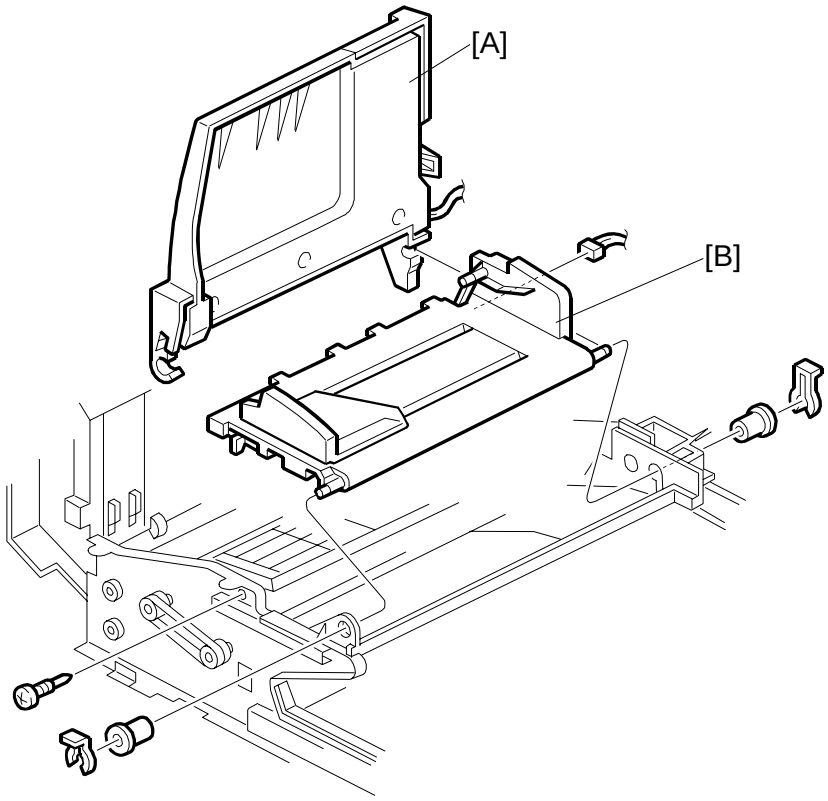

B132R116.WMF

Remove:

- Front, rear covers (☛3.18.1)

[A]: Original tray (x1, x2, Bushings x2)
[B]: Lift tray (x1, Pin screw x1)

Downloaded from www.Manualslib.com manuals search engine

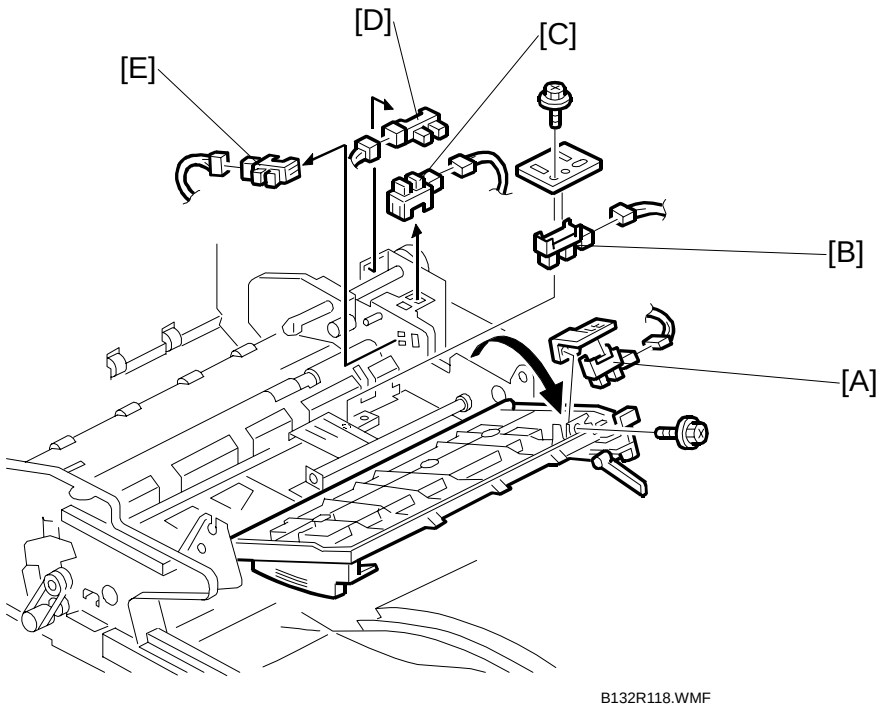

[A]: Original set sensor (✋ x1, 🔩 x1)
[B]: Upper inverter sensor (🔩 x1, ✋ x1)
[C]: Feed cover sensor (✋ x1)
[D]: Pick-up roller HP sensor (✋ x1)
[E]: Bottom plate position sensor (✋ x1)

Downloaded from www.Manualslib.com manuals search engine

3.18.8 ARDF POSITION SENSOR, APS START SENSOR

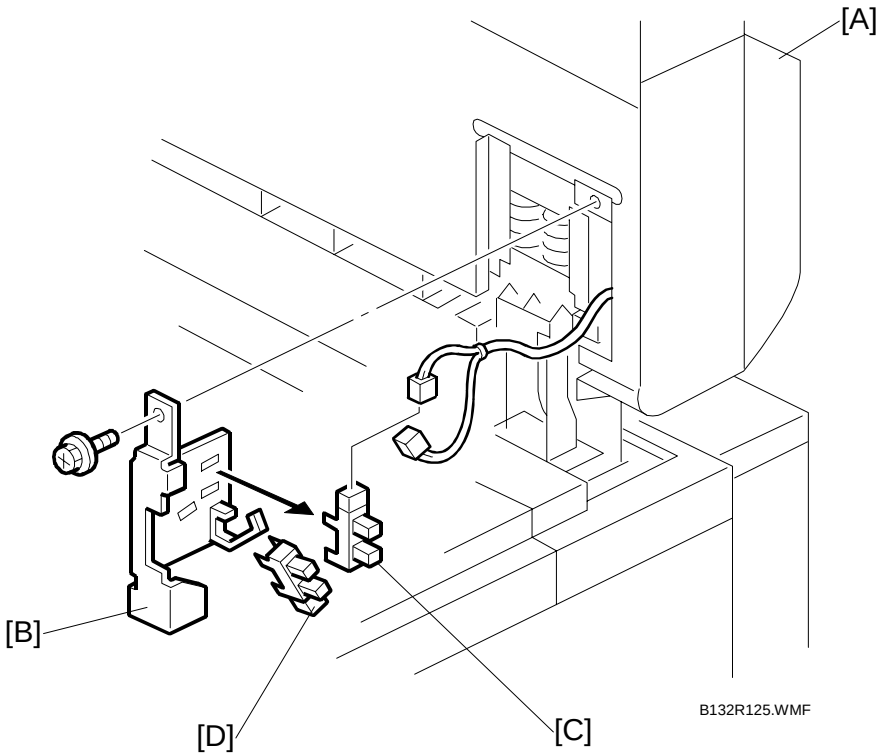

[A]: Raise the ARDF to the vertical position.

Remove:

[B]: APS bracket (x1)

[C]: ARDF position sensor (x1, x1)

[D]: APS start sensor (x1, x1)

Downloaded from www.Manualslib.com manuals search engine

3.18.9 ORIGINAL REGISTRATION, EXIT SENSORS

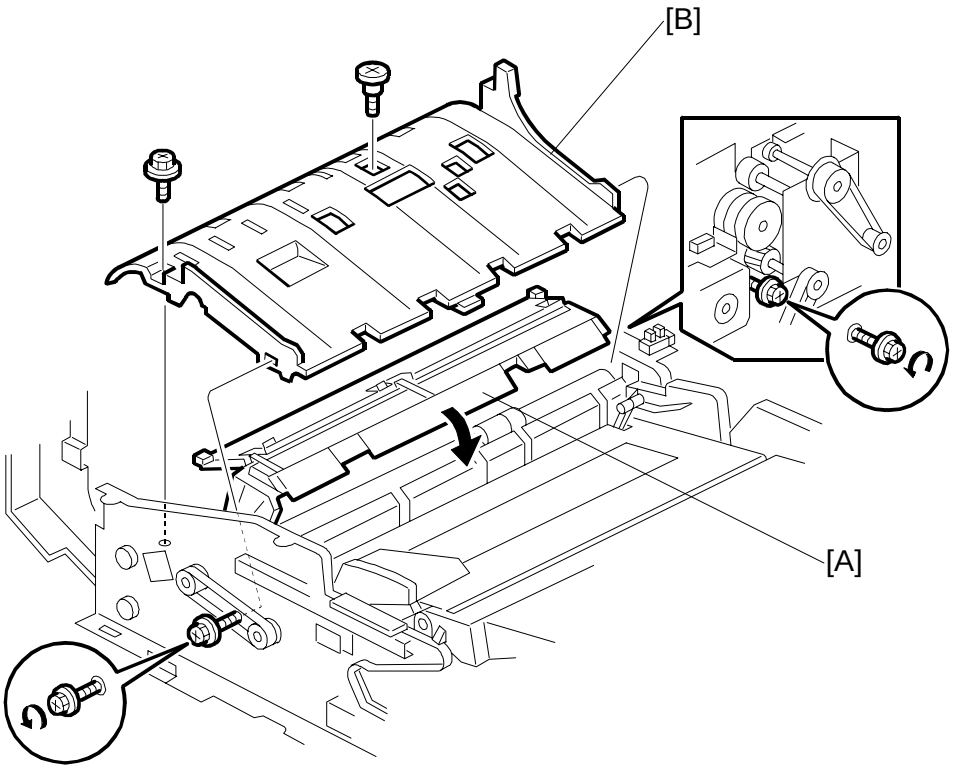

B132R112.WMF

- Remove the front and rear covers (☛3.18.1)
- Remove the original feed unit (☛3.18.2)

[A]: Rotate the inverter guide 180 degrees.
[B]: Original guide plate (🔩 x4).

Downloaded from www.Manualslib.com manuals search engine

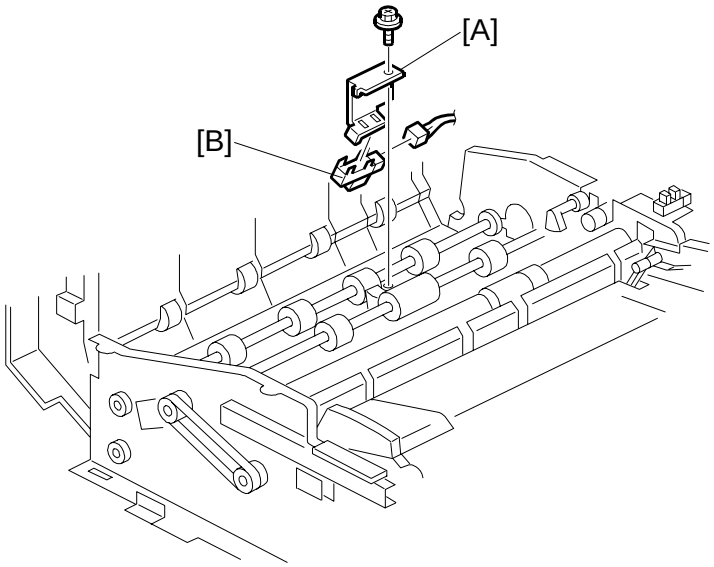

B132R113.WMF

Remove:

[A]: Bracket (☞ x1)
[B]: Original registration sensor (✋ x1)
[C]: Bracket (☞ x1)
[D]: Original exit sensor (✋ x1)

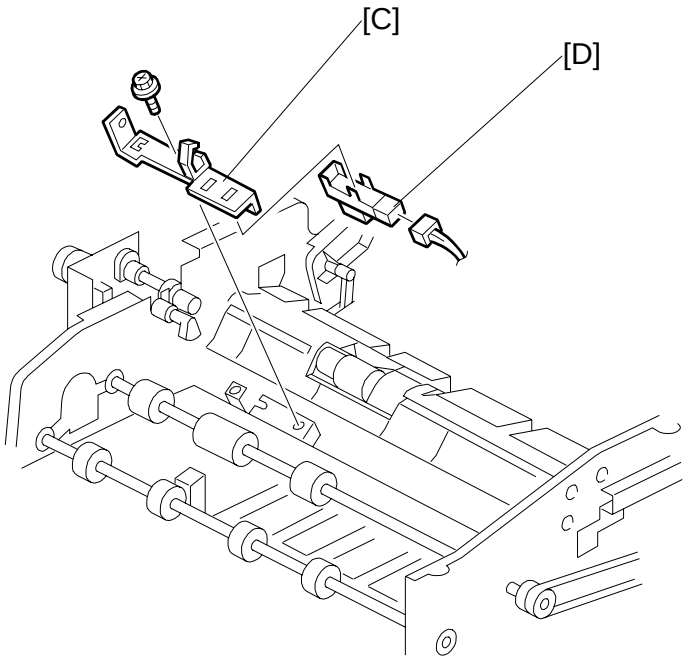

B132R115.WMF

Downloaded from www.Manualslib.com manuals search engine

3.18.10 ARDF SEPARATION ROLLER

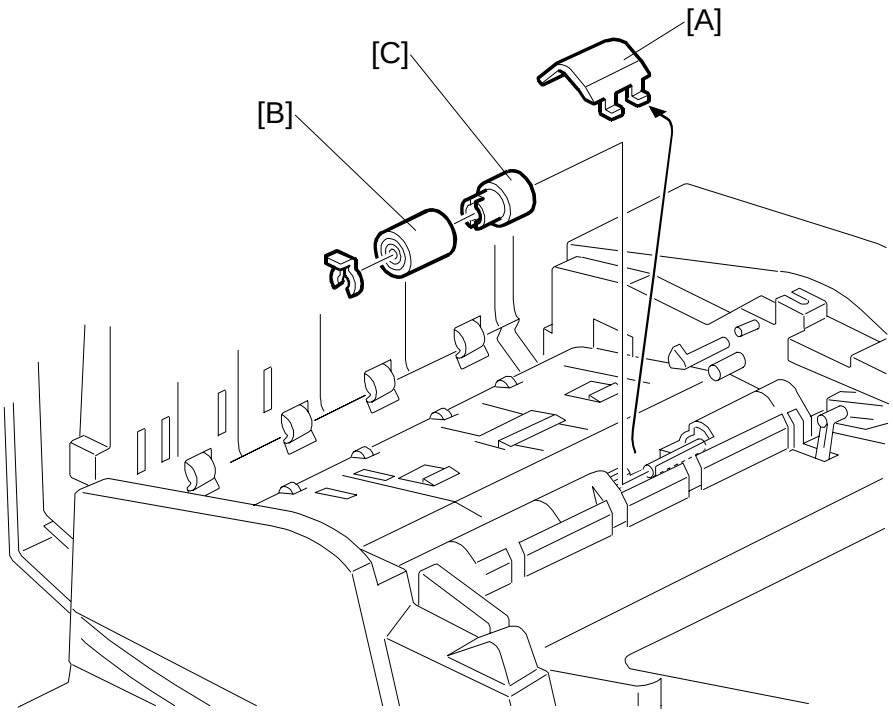

B132R108.WMF

- Open the feed cover
- Remove the original feed unit. (☛3.18.2)

Remove:

[A]: Separation roller cover. Use the tip of a small flathead screwdriver.
[B]: Separation roller (⟲ x 1)
[C]: Torque limiter

Downloaded from www.Manualslib.com manuals search engine

3.18.11 ARDF TRANSPORT BELT

Removing the ARDF Transport Belt Assembly

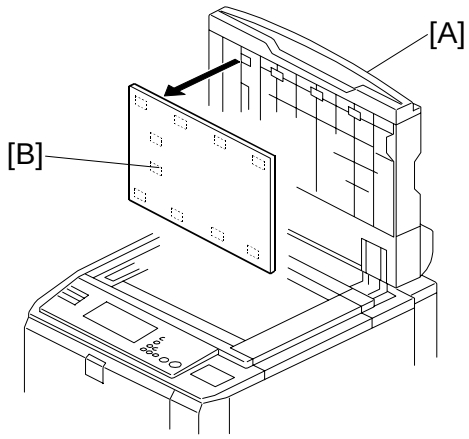

B132R102.WMF

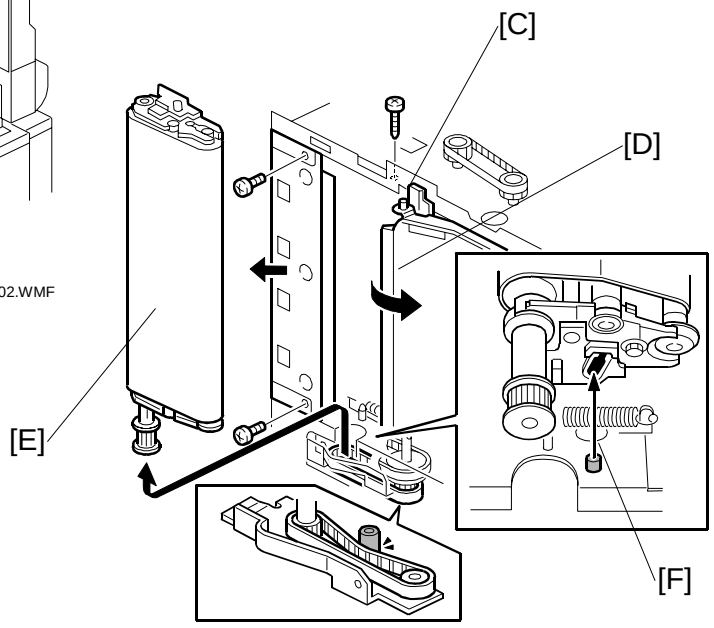

B132R126.WMF

1. Open the feed cover. (☛3.18.1)
2. Remove the ARDF front cover. (☛3.18.1)
3. Raise the ARDF [A] to the vertical position.
4. Pull off the white cover [B] (Velcro fasteners)
5. Release the stopper pin [C] of the transport guide [D].
6. Remove the transport belt assembly [E] (Pin screw x1, Timing belt x1)

Reinstallation

- Attach the timing belt as shown then insert the pin screw [F] as shown.

Downloaded from www.Manualslib.com manuals search engine

Removing the Belt

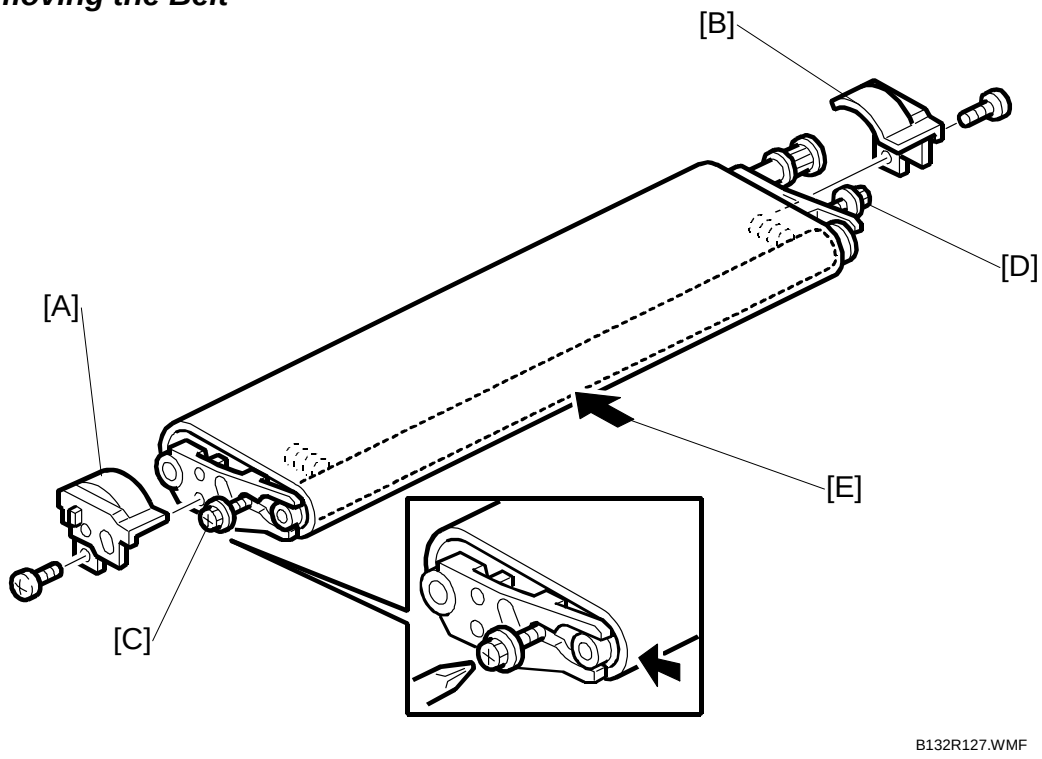

B132R127.WMF

1. Remove the front plastic cover [A] (x1)
2. Remove the rear plastic cover [B] (x1)
3. Loosen front lock screw [C]. Do not remove.
4. Loosen rear lock screw [D]. Do not remove. This releases the spring-loaded tension on the belt.
5. Grip the roller in the center [E] then squeeze the belt to bring the rollers together.
6. While squeezing the belt and rollers together in the center, tighten screws [C] and [D]. This compresses the spring and releases tension on the belt.

   Important

   - To avoid stripping the threads of the screws, do not apply excessive torque to these screws!
7. Release the belt and make sure that the belt is loose and that the rollers do not move. Repeat Steps 5 and 6 if the rollers expand and tighten the belt.

Downloaded from www.Manualslib.com manuals search engine

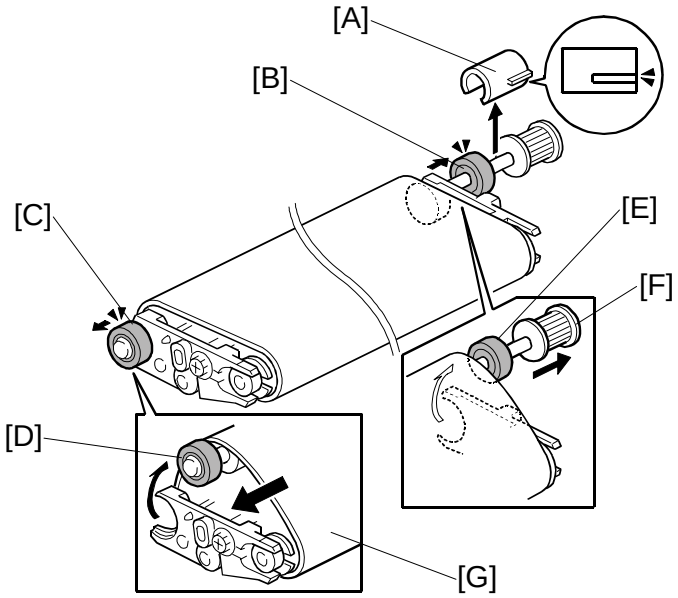

B132R139.WMF

8. Remove the Teflon sleeve [A].
9. Push the rear shaft bearing [B] out of its bracket.
10. Push the front shaft bearing [C] out of its bracket.
11. Push the front end of the shaft [D] over the top of the bracket.
12. Push the rear end of the shaft [E] over the top of the bracket.
13. Pull the shaft [F] out of the belt.
14. Pull the belt [G] toward the front to remove it.
15. Slide the new belt over the assembly.
16. Insert the shaft [F] into the new belt, snap the shaft into its brackets, and push in the shaft bearings.
17. Make sure that studs on the underside of the belt [H] are aligned with the grooves of the Teflon rollers on each end of the shaft below.

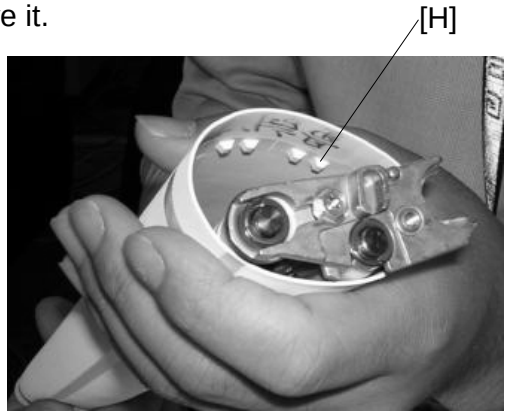

ORGB536.BMP

Downloaded from www.Manualslib.com manuals search engine

Reinstalling the Belt

1. Remove the ARDF front cover [A] (☛3.18.1)
2. Take out the special tool [B]. (🔩 x1)
   NOTE: The special tool [B] is attached to the front side plate. It is used to adjust the tension on the belt on both ends of the shaft.

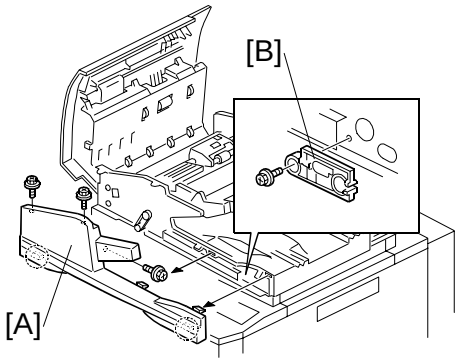

B132R104A.WMF

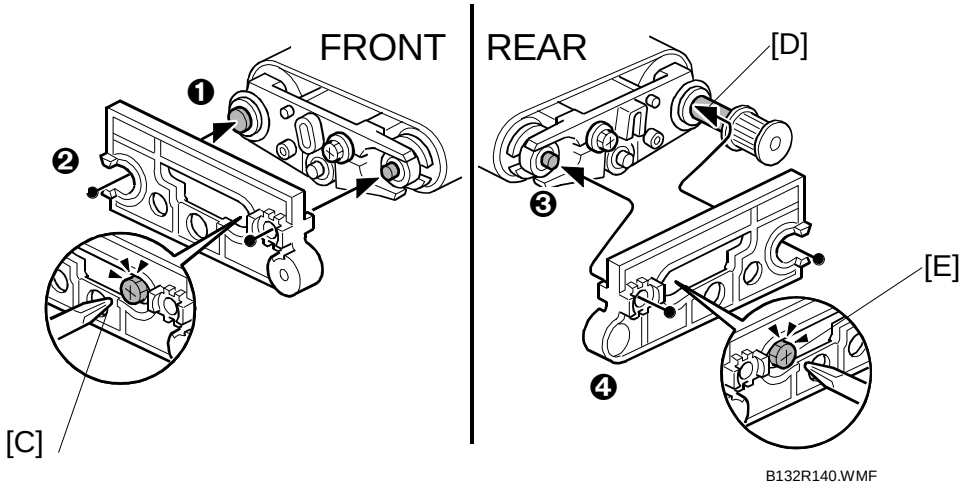

B132R140.WMF

3. Fit the special tool onto the FRONT.
4. Slowly loosen the front lock screw [C] until you see the tip of the shaft ❶ aligned with the hole ❷, then tighten the screw.

   Important

   • To avoid stripping the threads of the screws, do not apply excessive torque.
5. Remove the special tool and fit it onto the REAR.
   NOTE: If the Teflon sleeve has been reattached at [D], remove it. Do not reattach the sleeve until after adjusting the belt tension. (The special tool does not fit over the rear end with the Teflon sleeve attached.)
6. Slowly loosen the rear lock screw [E] until you see the tip of the shaft ❸ aligned with the hole ❹ then tighten the screw.
7. Re-install the Teflon sleeve.
8. Re-install the front and rear plastic cover.
9. Reinstall the transport belt assembly in the ARDF.

Downloaded from www.Manualslib.com manuals search engine

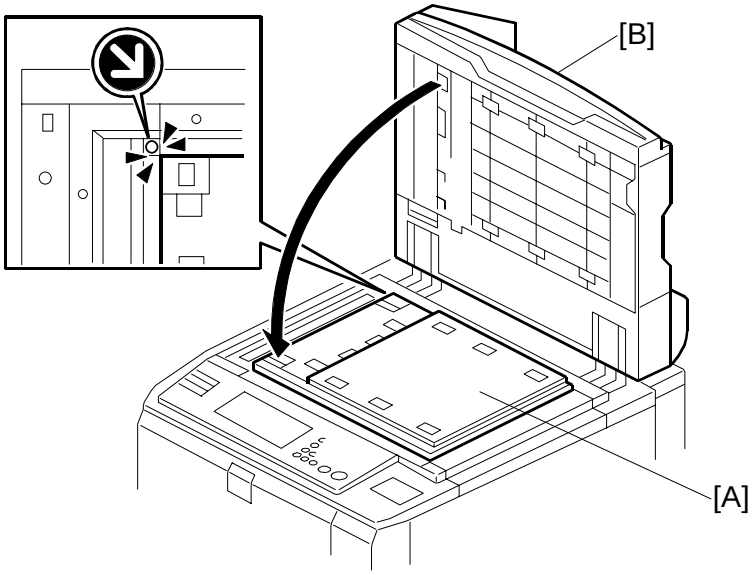

B132R103.WMF

Reattaching the White Cover

1. With its white side down, set the cover [A] on the exposure glass.
2. Make sure the upper left corner is aligned with the arrow at the corner of the exposure glass.
3. Close the ARDF [B] on top of the cover.

Downloaded from www.Manualslib.com manuals search engine

3.18.12 ARDF CONTROL BOARD

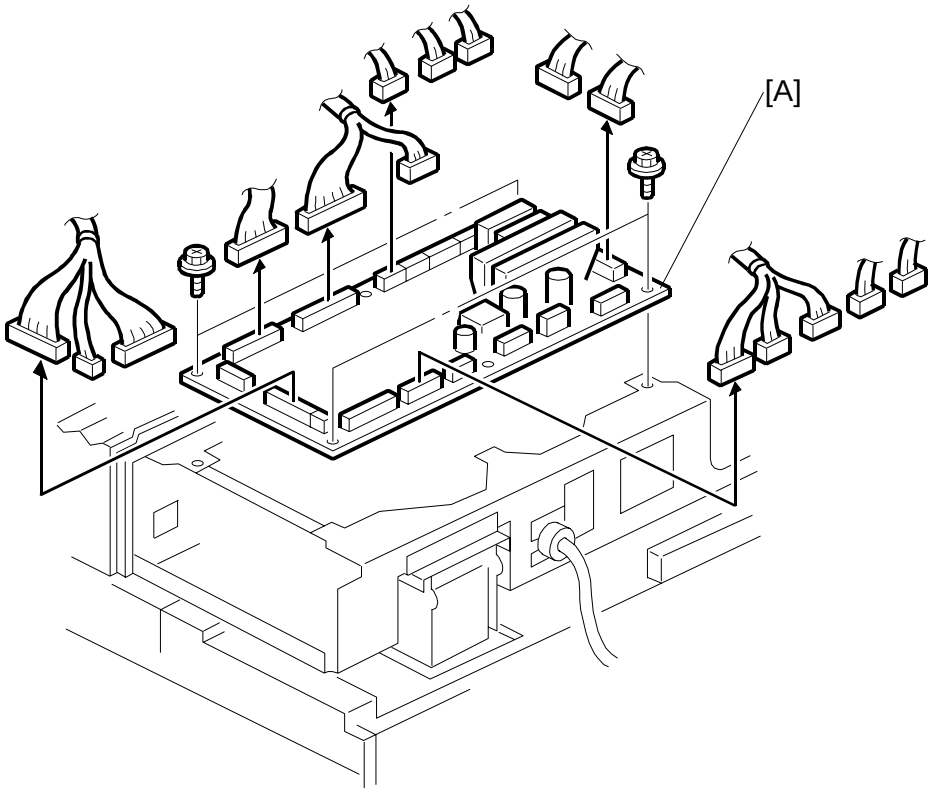

B132R124.WMF

Remove:

- ARDF Rear cover (☛3.18.1)

[A]: ARDF control board (✋ x17, 🔩 x4)

Downloaded from www.Manualslib.com manuals search engine

3.18.13 ARDF BOTTOM PLATE LIFT MOTOR

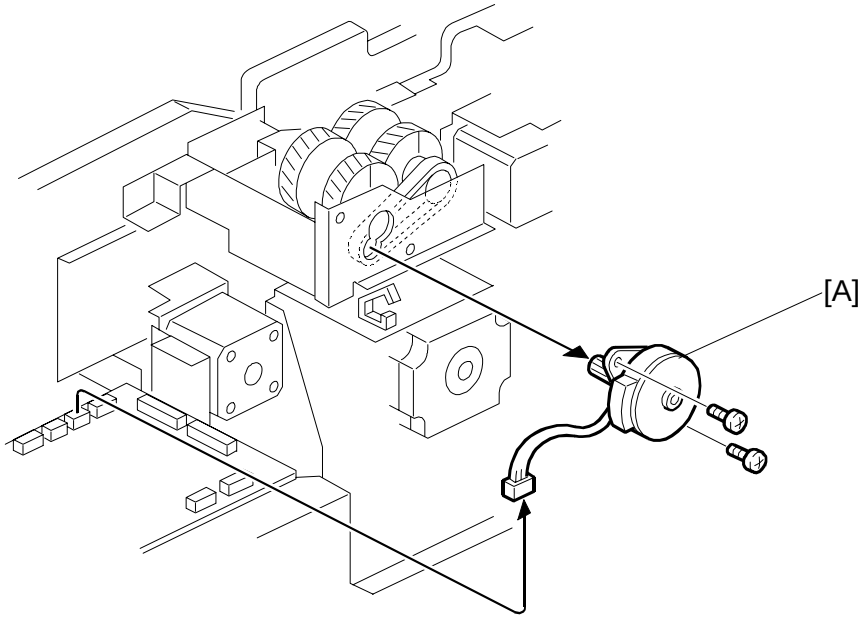

- Open the feed cover.

Remove:

- ARDF rear cover (☛3.18.1)

[A]: ARDF bottom plate lift motor (✋ x1, 🔩 x2, Timing belt x1)

Downloaded from www.Manualslib.com manuals search engine

3.18.14 ARDF FEED MOTOR, ARDF TRANSPORT MOTOR

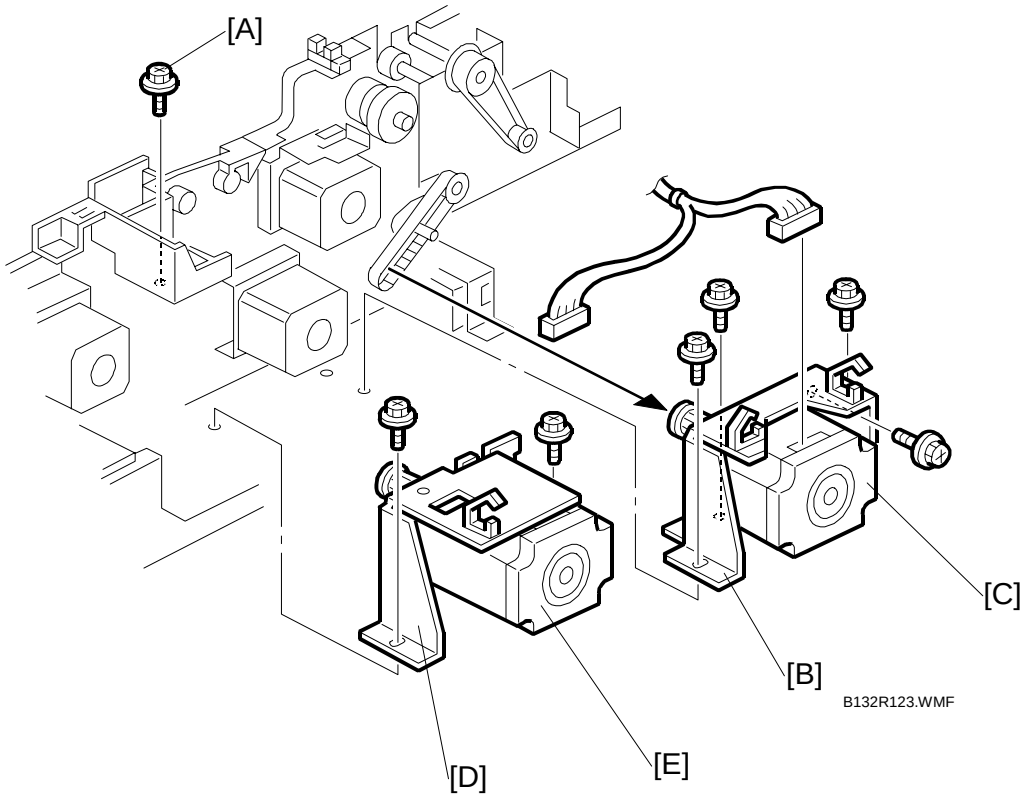

- Open the feed cover
- Remove the ARDF rear cover (☛3.18.1)

Important! The feed motor must be removed before the transport motor.

[A]: Screw (x1)
[B]: Feed motor bracket (x4, x1, Timing belt x1, Spring x1)
[C]: Feed motor (x2)
[D]: Transport motor bracket (x2, x1, Timing belt x1, Spring x1)
[E]: Transport motor (x2)

Reinstallation

- Reinstallation is easier if you first set the spring tension with the screws and then fasten the motor bracket with screws.

Downloaded from www.Manualslib.com manuals search engine

3.18.15 ARDF PICK-UP ROLLER LIFT MOTOR

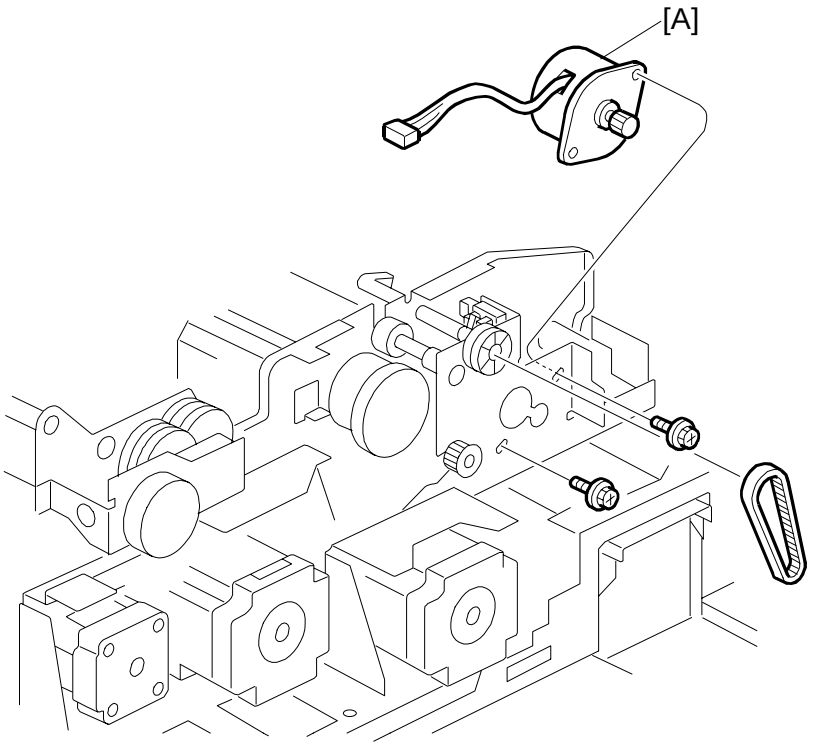

B132R120.WMF

- Open the feed cover.

Remove:

- ARDF rear cover (☛3.18.1)

[A]: Pick-up roller lift motor (x2, x1, Timing belt x1)

Downloaded from www.Manualslib.com manuals search engine

3.19 IMAGE ADJUSTMENTS

3.19.1 SCANNING

Before doing the following scanner adjustments, perform or check the printing registration, side-to-side adjustment and the blank margin adjustment. Use a C-4 test chart to perform the following adjustments.

Scanner sub-scan magnification

1. Place the test chart (C-4) on the exposure glass and make a copy.
2. Check the magnification ratio.
3. Use **SP4008** (Sub Scan Mag) to adjust if necessary. Standard: ±1.0%.

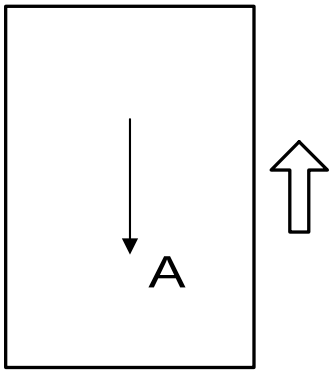

B146R962.WMF

A: Sub-scan magnification

Scanner leading edge and side-to-side registration

1. Place the test chart (C-4) on the exposure glass and make a copy.
2. Check the leading edge and side-to-side registration.
3. Adjust with the following SP modes if necessary. Standard: 0 ± 2mm.

	SP mode
Sub Scan Reg	**SP4010 001**
Main Scan Reg	**SP4011 001**

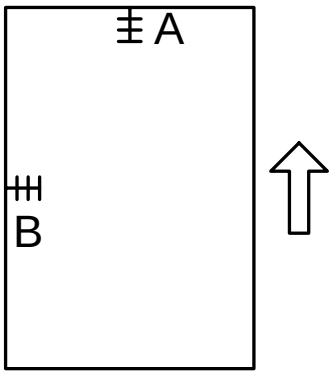

B146R963.WMF

A: Leading Edge Registration
B: Side-to-side Registration

Downloaded from www.Manualslib.com manuals search engine

Main scan dot position correction

Adjust the printer registration before adjusting the scanner.

1. Enter the SP mode.
2. Open **SP4010** and **SP4011**.
3. Make sure that each value is equal to the factory default.
4. Press [COPY Window] and copy the C-4 chart in the full-color photo mode.
   NOTE: Be sure to copy in the photo mode. Color displacement cannot be checked correctly in text mode.
5. Use a magnification scope to check the yellow and cyan vertical lines.
   - If they exactly overwrite the black line at the edges of the copy, exit the SP mode. No adjustment is necessary
   - If the yellow and cyan lines significantly extend beyond the black lines, go to the next step.
6. Press [SP Mode] to return to the SP mode.
7. Do **SP4932**. (Main Scan Dot Adj) Compare the current values against the table.

SP4932 001	R:Left
SP4932 002	R:Right
SP4932 003	B:Left
SP4932 004	B:Right

Downloaded from www.Manualslib.com manuals search engine

3.19.2 ARDF

ARDF side-to-side and leading edge registration

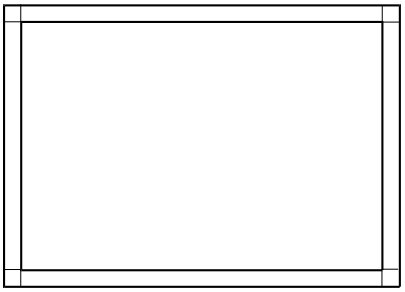

B146R964.WMF

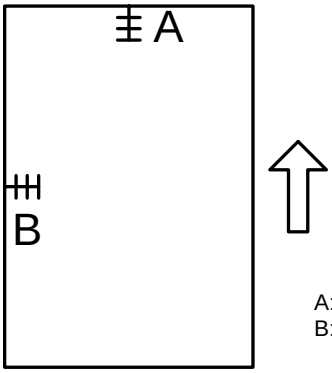

A: Leading edge registration
B: Side-to-side registration

B146R965.WMF

Make a temporary test chart as shown above using A3/DLT paper.

1. Place the temporary test chart on the ARDF table and make a copy.
2. Check the registration, and adjust using the following SP modes if necessary.

SP Code	What It Does	Adjustment Range
SP6006 001	ADF Main Reg Adj	± 3.0 mm
SP6006 003	ADF Sub Reg Adj	± 29 steps
SP6006 005	ADF Buck Adj:Front	± 20 steps
SP6006 006	ADF Buck Adj:Back	± 20 steps
SP6006 007	ADF TEdge EMargin	± 20 steps

Downloaded from www.Manualslib.com manuals search engine

3.19.3 REGISTRATION

Image Area

The image area must be configured correctly. Adjust the registration within the adjustment standard range as described below.

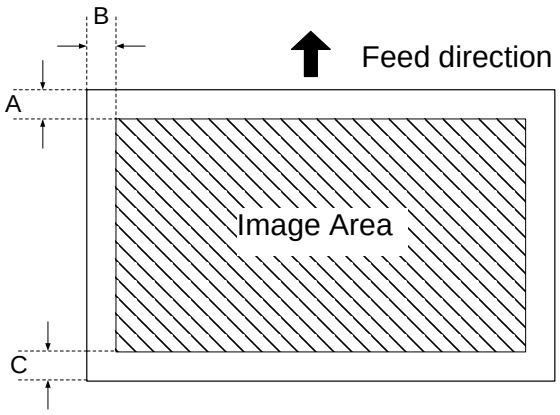

A = B = C = 4.2 mm (1.6")

Leading Edge

Adjusts the leading edge registration for each paper type and process line speed.

Side to Side

Adjusts the side-to-side registration for each paper feed station. The side-to-side registration for the LCT can be adjusted with **SP1002 006**.

Adjustment Standards

- Leading edge (sub-scan direction): 3 ± 0 mm
- Side to side (main-scan direction): 2 ± 0 mm

Paper Registration Standard

The registration in both main- and sub-scan directions may fluctuate within the following tolerance.

1st side

- Sub-scan direction: 0 ± 1.5 mm
- Main-scan direction: 0 ± 2 mm

2nd side in duplex

- Sub-scan direction: 0 ± 3 mm
- Main-scan direction: 0 ± 4 mm

Downloaded from www.Manualslib.com manuals search engine

Adjustment Procedure

1. Enter SP mode and open **SP2109**.
2. Print **Pattern 10**.
   NOTE: Print several printing patterns and average the measured values of the leading edge and side-to-side registration values.
3. Do the leading edge registration adjustment.
   - Check the leading edge registration and adjust it with **SP1001**.
   - Select the adjustment conditions (paper type and process line speed).
   - Input the value and press the [#] key.
   - Check the leading edge adjustment by printing **Pattern 10** with **SP2109**.
4. Do the side to side registration adjustment.
   - Check the side-to-side registration and adjust it with **SP1002**.
   - Select the adjustment conditions for the paper feed station.
   - Input the value and press the [#] key.
   - Check the side-to-side adjustment by printing **Pattern 10** with **SP2109**.

Downloaded from www.Manualslib.com manuals search engine

3.19.4 COLOR REGISTRATION

Forced MUSIC Adjustment

The line position adjustment optimizes the quality of color prints. You can do forced MUSIC adjustment with SP 2111 001:

We recommend that you do the forced MUSIC adjustment at the customer location immediately after installation, or after servicing or adjusting any parts or components of the following units:

- Around the drum
- ITB unit (especially after belt replacement)
- Paper Transfer Roller
- Laser unit

Adjustment of Line Speed for Thick Paper

Adjust the line speed of the fusing unit (the speed of the K development motor) when:

- Color shift corrected with the line position adjustment.
- Color registration shifts more at the trailing edge than at the leading edge.

Color Registration Test and Error Adjustment

Before you start this procedure, make sure that the exposure glass is clean. Also, make sure that the ITB is installed correctly, especially at the edge.

1. Load A3/DLT paper and select full-color mode.
2. Start **SP2109 002** and select pattern 1 (1-dot line), then press the “OK” button.
3. Press the “Copy Window” button. Then select A3/DLT paper, and press the “Start” button to print the pattern.
   NOTE: Make sure that “Full Color Mode” is selected before you press the Start button.
4. Look at the printout. The horizontal and vertical lines must show no color (must be black). In that condition, the K, C, M, and Y images are deposited exactly on top of each other.
5. If there is color on the printout, there is a color registration error, and we must correct the problem. To correct the problem, do the MUSIC process with **SP2111 001**. This takes about 50 seconds.
6. Do step 2 again.
7. If there are color registration errors, then do the procedure described in Section 4 "4.2.2 Color Registration Error Adjustment".

Downloaded from www.Manualslib.com manuals search engine

3.19.5 SKEW ADJUSTMENT AFTER LASER UNIT REPLACEMENT

To Print the Trim Pattern:

1. Do **SP2109 002** (Test Pattern – Select Pattern) and select pattern **10**.
2. Press the [Execute] on the display.
3. Press the [Copy Screen] on the display to switch to the normal copier screen.
4. Select the paper size and color then press the [Start] key to print the pattern.
5. Press the [SP Screen].
6. Do **SP2109 002** and select pattern **0** and press the [Execute] button.
7. Check the test pattern to determine whether the image is perpendicular at the corners.

   If the image pattern is correct, no further adjustment is necessary.

   -or-

   If the pattern is not correct (a skewed parallelogram), go to the next step.

Downloaded from www.Manualslib.com manuals search engine

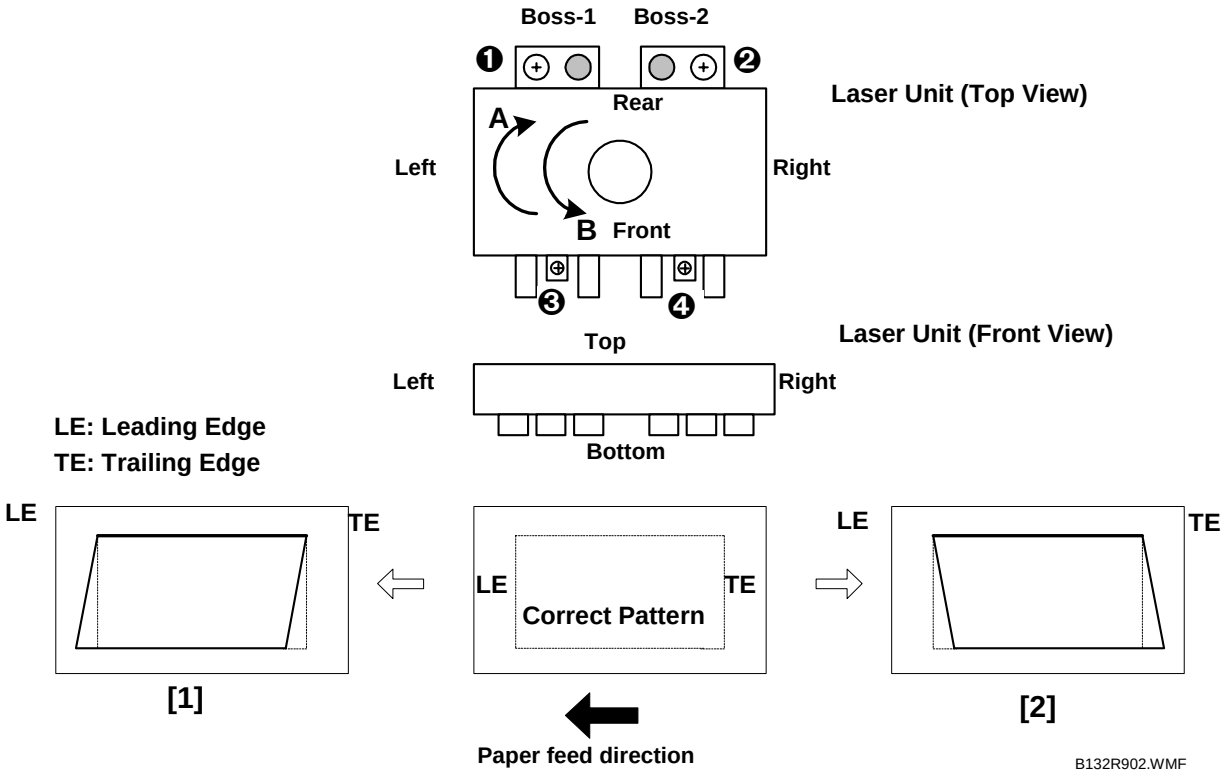

To Adjust the Pattern Output:

1. Remove the exposure glass. (☛3.3.1)
2. Remove the lens cover and lens block. (☛3.3.2)
3. Loosen the screws of the laser unit ❶, ❷, ❸, ❹(🔩 x4).
4. Determine the direction of skew in the printed pattern.
5. Refer to the illustration, then shift the laser unit toward the rear (**A**) or toward the front (**B**) to adjust the skew.
   - If the skew resembles the left pattern **[1],** turn the laser unit slightly counter-clockwise in the **B** direction.
   - If the skew resembles the right pattern **[2],** turn the laser unit slightly clockwise in the **A** direction.
   - **Boss-1**, **Boss-2** provides the reference points for correct alignment.
6. Reassemble the copier and print another trim pattern to confirm that the skew has been corrected.

Downloaded from www.Manualslib.com manuals search engine

3.19.6 PRINTER GAMMA CORRECTION

ACC adjustment done at installation is usually sufficient to adjust the color balance for optimum performance. Printer gamma correction is required for fine adjustment to meet a customer requirement.

The printer gamma curve created during ACC can be modified with SP modes. The gamma data for highlight, middle, shadow areas, and ID max can be adjusted. The adjustable range is from 0 to 30 (31 steps).

Copy Mode

KCMY Color Balance Adjustment

The adjustment uses only “Offset” values.

Important: Never change “Option” values (default value is 0).

Highlight (Low ID)	Levels 2 through 5 in the C4 chart 10-level scale
Middle (Middle ID)	Levels 3 through 7 in the C4 chart 10-level scale
Shadow (High ID)	Levels 6 through 9 in the C4 chart 10-level scale
ID max	Level 10 in the C4 chart 10-level scale (affects the entire image density.)
Offset	The higher the number in the range associated with the low ID, middle ID, high ID, and ID max, the greater the density.

There are four adjustable modes. You can get access to these with **SP4918 009**:

- Copy Photo mode
- Copy Text mode
- Copy Text (Single Color) mode
- Copy Photo (Single Color) mode

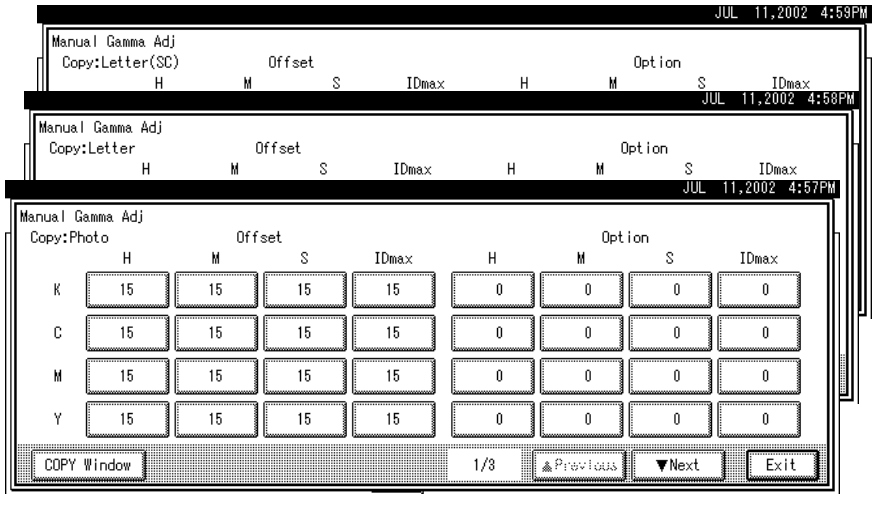

B146R967.WMF

Downloaded from www.Manualslib.com manuals search engine

Adjustment Procedure

1. Copy the C-4 chart in mode that you want to adjust.
2. Enter the SP mode.
3. Press “Copy SP.”
4. Open **SP4918 009**.
5. Adjust the offset values until the copy quality conforms to the standard. (Refer the tables below.)

Important

- Never change “Option” value (default value is 0).
- Always adjust the density in order: ID Max→ Middle→ Shadow→ Highlight

- Photo Mode, Full Color -

Step	Item to Adjust	Level on the C-4 chart	Adjustment Standard
1	ID max: (K, C, M, and Y)	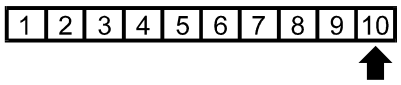	Adjust the offset value so that the density of level 10 matches that of level 10 on the C-4 chart.
2	Middle (Middle ID) (K, C, M, and Y)	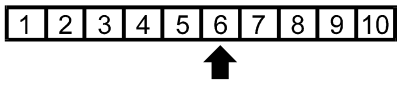	Adjust the offset value so that the density of level 6 matches that of level 6 on the C-4 chart.
3	Shadow (High ID) (K, C, M, and Y)	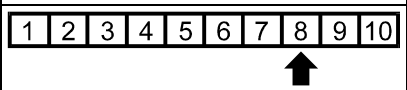	Adjust the offset value so that the density of level 8 matches that of level 8 on the C-4 chart.
4	Highlight (Low ID) (K, C, M, and Y)	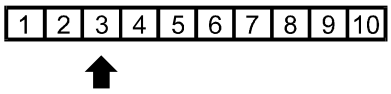	Adjust the offset value so that dirty background is not visible on the copy and the density of level 3 is slightly lighter that of level 3 on the C-4 chart.
5	K Highlight (Low ID) (C,M, and Y) <on the full color copy>	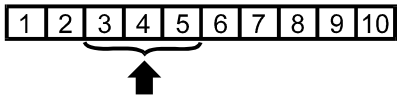	Adjust the offset value so that the color balance of black scale levels 3 through 5 in the copy is seen as gray (no C, M, or Y should be visible). If the black scale contains C, M, or Y, redo step 1 to 4.

Downloaded from www.Manualslib.com manuals search engine

- Photo Mode, Single Color -

Step	Item to Adjust	Level on the C-4 chart	Adjustment Standard
1	ID max: (K)	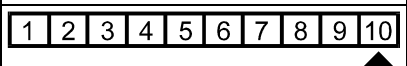	Adjust the offset value so that the density of level 10 matches that of level 10 on the C-4 chart.
2	Middle (Middle ID) (K)	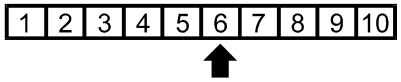	Adjust the offset value so that the density of level 6 matches that of level 6 on the C-4 chart.
3	Shadow (High ID) (K)	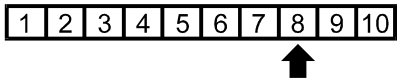	Adjust the offset value so that the density of level 8 matches that of level 8 on the C-4 chart.
4	Highlight (Low ID) (K)	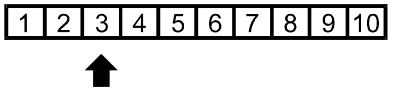	Adjust the offset value so that dirty background is not visible on the copy and the density of level 3 is slightly lighter that of level 3 on the C-4 chart.

- Text (Letter) Mode, Full Color -

Step	Item to Adjust	Level on the C-4 chart (K)	Adjustment Standard
1	ID max: (K, C, M, and Y)	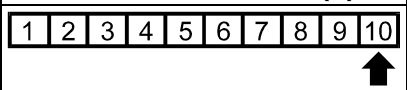	Adjust the offset value so that the density of level 10 matches that of level 10 on the C-4 chart.
2	Middle (Middle ID) (K, C, M, and Y)	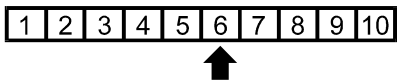	Adjust the offset value so that the density of level 6 matches that of level 6 on the C-4 chart.
3	Shadow (High ID) (K, C, M, and Y)	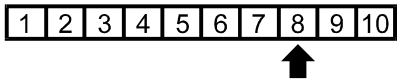	Adjust the offset value so that the density of level 8 matches that of level 8 on the C-4 chart.
4	Highlight (Low ID) (K, C, M, and Y)	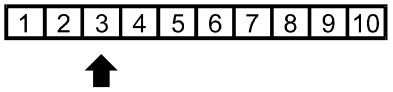	Adjust the offset value so that dirty background is not visible on the copy and the density of level 3 is slightly lighter that of level 3 on the C-4 chart.

Downloaded from www.Manualslib.com manuals search engine

- Text (Letter) Mode, Single Color -

Step	Item to Adjust	Level on the C-4 chart (K)	Adjustment Standard
1	ID max: (K)	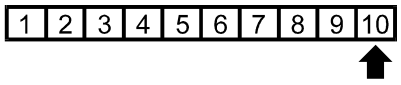	Adjust the offset value so that the density of level 10 matches that of level 10 on the C-4 chart.
2	Middle (Middle ID) (K)	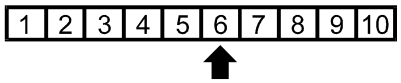	Adjust the offset value so that the density of level 6 matches that of level 6 on the C-4 chart.
3	Shadow (High ID) (K)	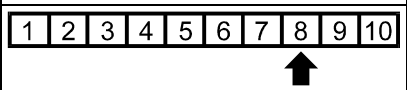	Adjust the offset value so that the density of level 8 matches that of level 8 on the C-4 chart.
4	Highlight (Low ID) (K)	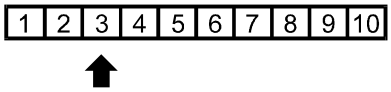	Adjust the offset value so that dirty background is not visible on the copy and the density of level 3 is slightly lighter that of level 3 on the C-4 chart.

After "Shadow" adjustment, if text in the test pattern does not print clearly:

- Check to determine whether the 5 line/mm pattern at each corner is printed clearly.
- If it is not, adjust the offset value of ‘shadow’ again until the pattern prints clearly.

Downloaded from www.Manualslib.com manuals search engine

Printer Mode

There are six adjustable modes. Select these modes with in the Printer SP mode with **SP1102 001**:

- 1200 x 1200 photo mode
- 600 x 600 text mode
- 1800 x 600 text mode
- 600 x 600 photo mode
- 1800 x 600 photo mode
- 1200 x 1200 text mode

	K	C	M	Y
Highlight	SP1104 001	SP1104 021	SP1104 041	SP1104 061
Middle	SP1104 002	SP1104 022	SP1104 042	SP1104 062
Shadow	SP1104 003	SP1104 023	SP1104 043	SP1104 063
ID max	SP1104 004	SP1104 024	SP1104 044	SP1104 064

Adjustment Procedure

1. Do the ACC adjustment for the printer mode.
2. Turn the main power off and on.
3. Enter SP mode.
4. Touch “Printer SP”.
5. Select **SP1102 001** and select the print mode that you want to adjust.
6. To review the image quality for these settings, do **SP1103 001** to print out a tone control test sheet.
7. Adjust the color density with **SP1104** as shown below while comparing the tone control test sheet with the C4 test chart.

   Important: Always adjust the density in order: ID Max→ Middle→ Shadow→ Highlight
8. Save the adjusted settings with **SP1105 001**.

Downloaded from www.Manualslib.com manuals search engine

Adjustment Reference For Gamma Correction

The following tables show the adjustment reference for gamma correction. The tables show the level of the color scale on the C-4 test chart and on the tone control test sheet printed in the printer SP mode. For example, for K at text mode, grade 12 on the tone control test sheet should be the same as grade 7 on the C-4 chart.

Normally, it is not necessary to adjust the gamma data as shown in the table since ACC adjusts the gamma curve automatically. The fine-tuning of color balance by gamma data adjustment is necessary only when the results of ACC and Color Calibration do not meet customer requirements.

	C-4 test chart			1	2	3	4	5	6	7	8	9	10
K	Test sheet	Photo	600 x 600	-	1	3	5	6	9	10	11	16	-
			1800 x 600	-	1	3	5	6	8	10	11	16	-
			1200 x 1200	-	1	3	4	6	8	10	12	15	16
		Text	600 x 600	-	1	3	5	6	9	10	11	16	-
			1800 x 600	-	1	3	5	6	9	10	12	16	-
			1200 x 1200	-	1	3	5	6	9	11	12	15	16

	C-4 test chart			1	2	3	4	5	6	7	8	9	10
C	Test sheet	Photo	600 x 600	-	1	3	5	6	9	10	12	13	14
			1800 x 600	-	1	3	5	6	8	10	11	12	13
			1200 x 1200	-	1	3	4	5	8	10	11	12	13
		Text	600 x 600	-	1	3	4	5	8	10	11	12	13
			1800 x 600	-	1	3	5	6	9	10	11	12	14
			1200 x 1200	-	1	3	4	5	9	10	11	12	13

	C-4 test chart			1	2	3	4	5	6	7	8	9	10
M	Test sheet	Photo	600 x 600	-	1	4	6	8	11	12	14	16	-
			1800 x 600	-	1	4	6	8	11	12	15	16	-
			1200 x 1200	-	1	4	6	7	10	12	14	16	-
		Text	600 x 600	-	1	4	6	7	10	12	14	16	-
			1800 x 600	-	1	4	6	8	11	13	14	16	-
			1200 x 1200	-	1	4	6	7	10	12	13	16	-

	C-4 test chart			1	2	3	4	5	6	7	8	9	10
Y	Test sheet	Photo	600 x 600	1	3	4	9	11	12	14	15	16	-
			1800 x 600	1	3	5	8	10	11	14	15	16	-
			1200 x 1200	1	3	5	8	10	11	14	15	16	-
		Text	600 x 600	1	2	5	8	10	11	14	14/ 15	15	16
			1800 x 600	1	3	6	9	10	12	14	15	16	-
			1200 x 1200	1	2	4	7	9	10	13	15	16	-

Downloaded from www.Manualslib.com manuals search engine

3.20 TOUCH SCREEN CALIBRATION

After clearing memory, or if the touch screen detection function is not working correctly, calibrate the touch screen.

Important

- Do not attempt to use items [2] to [9] on the Self-Diagnostic Menu. These items are for design use only.
- To avoid causing an error, do not touch the Reset key while doing this procedure.

1. Press [Clear] ( ), press **1993** press, and then press [Clear/Stop] ( ) 5 times.

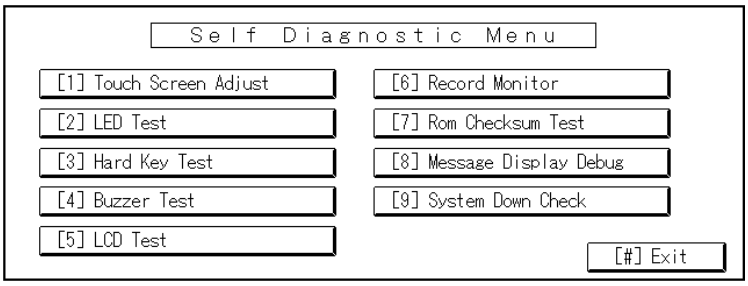

B140R892.WMF

2. Press “Touch Screen Adjust” (or press "**1**").

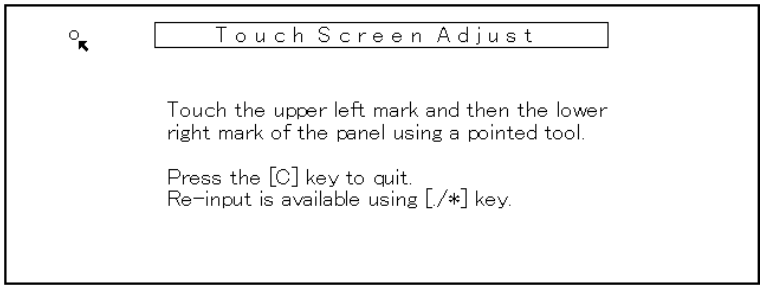

B140R893.WMF

3. Use a pointed (not sharp!) tool to press the upper left mark .
4. Press the lower right mark after it appears.
5. Press a few spots on the touch screen to confirm that the marker (**+**) appears exactly where the screen is touched. If the **+** mark does not appear where the screen is touched, press [Cancel] and repeat from Step 2.
6. When you are finished, press **[#] OK** on the screen (or press [#] on the operation panel).
7. Press **[#] Exit** on the screen to close the Self-Diagnostic menu and save the settings.

Downloaded from www.Manualslib.com manuals search engine

4. TROUBLESHOOTING

4.1 PROGRAM DOWNLOAD

4.1.1 OVERVIEW

Here are some important points to keep in mind when downloading software:

- If an error interrupts download processing, the machine cannot operate normally with the program software only partially downloaded.
- When download processing execution starts, “Downloading…” is displayed and when downloading has completed successfully, the message is cleared.
- If the download is interrupted when the “Downloading …” message is displayed, the machine does not attempt a re-try.
- The program that downloads firmware from an SD card is part of the GW controller software. If downloading this software is interrupted, the program stored in the machine may be corrupted. Because of this, it may not be possible to restart the downloading program. (In addition, if the GW controller software cannot be downloaded, other software on other SD cards cannot be downloaded.) However, it may be possible to restart the program without replacing the board by setting DIP SW 1 on the controller to ON, and re-starting.

4.1.2 RECOVERY METHODS

When an error occurs during downloading, an error code is displayed on the operation panel.

- If the download procedure can be re-started, re-start the download procedure.
- If the download procedure cannot be downloaded for other than the GW controller, replace the board where the downloaded program is stored.
- If the download procedure cannot be downloaded for the GW controller, set DIP SW 1 to ON. Power the machine OFF and ON to start the downloading program. After downloading has completed, set the DIP SW to OFF then power the machine OFF and ON again.

Downloaded from www.Manualslib.com manuals search engine

4.1.3 DOWNLOAD ERROR CODES

	Display	Details	Recovery
01	Reboot after SD card insert E01 ↕ Module ID Card No. xx/xx	Controller ROM update error 1 When the update break data is stored in NVRAM, the break module information and the decompression module capable of writing do not match.	• Use the correct card
02	Download Error E02 Power OFF/ON	Controller ROM update error 2. Error occurs during ROM update program initialization.	• Cycle the machine OFF/ON to rewrite
03	Download Error E03 Power OFF/ON	Controller ROM update error 3 The ROM for the write operation does not exist.	• Cycle the machine OFF/ON • Install the missing ROM DIMM
04	Download Error E04 Power OFF/ON	Controller ROM update error 4 GZIP data confirmation fails. (CRC value check)	• Cycle the machine OFF/ON • Set DIP SW 1 to ON and retry • Replace RAM DIMM • Replace controller board
05	Download Error E05 Power OFF/ON	Controller ROM update error 5 Error occurs when writing to the device.	• Cycle the machine OFF/ON • Set DIP SW 1 to ON and retry • Replace RAM DIMM • Replace controller board
06	Download Error E06 Power OFF/ON	Controller ROM update error 6 CPU clock error.	• Turn the machine power OFF/ON. • Set controller DIPSW-1 to ON to force the machine to write to ROM. • If you cannot force the machine to write, replace the controller board.
19	Download Error E19 Power OFF/ON	Controller ROM update error 7 Schedule data is unclear.	• Software defective
20	Down Error E20 Power Off/On	System error 1 (+SC991) The physical address cannot be mapped. Software/hardware is defective	• Cycle the machine OFF/ON and re-try • Replace controller board
21	Download Error E21 Power Off/On	System error 2 (+SC991) There is not sufficient memory to download.	• Cycle the machine OFF/ON and re-try. • Replace RAM • Replace the controller board

Downloaded from www.Manualslib.com manuals search engine

	Display	Details	Recovery
22	Download Error E22 Module ID Card No xx/xx	System error 3 (+SC991) Data fails to decompress. Card defective.	• Cycle the machine OFF/ON and re-try. • Replace card • Replace controller board
	SC991	System error 4	• Cycle the machine OFF/ON and re-try • Replace the controller board
23	Download Error E24 Power Off/On	System error 5 Card read/write error. Software or card defective.	• Cycle the machine OFF/ON and re-try • Replace the card • Replace the controller board
30	No Valid Data E30	Download dysfunction 1 Print download is not possible. Cannot download to HDD because HDD not installed or defective.	• HDD defective • HDD harness disconnected, defective
31	Reboot After Card Insert E31 Module ID Card No. xx/xx	Download dysfunction 2 Download continuity error with more than one card. The second or later card is not compatible.	• Set the correct cards in the correct order
32	Reboot After Card Insert E32 Module ID Card No. xx/xx	Download dysfunction 3 Download interrupted because card is not correct, or power failure interrupted download.	• Use the correct card • If power failure caused the failure, remove the card and insert another.
33	No Valid Data E33	Download dysfunction 4 Card version error. Attempted to download program using a card with the wrong version number.	• Use the correct card
34	No Valid Data E34	Download dysfunction 5 Specification error. DOM card set in EXP machine, or vice versa.	• Use the correct card
35	No Valid Data E35	Download dysfunction 6 Wrong model. The inserted card is for another model.	• Use the correct card
36	No Valid Data E36	Download dysfunction 7 Module error. The program that you are attempting to download does not exist on the machine, or the contact points at the card and the machine slot are not connected.	• Use the correct card, inserted correctly • Install a ROM DIMM if none is installed
37	No Valid Data E37	Download dysfunction 8 Edit option card error. You attempted to employ a used card.	• Use an unused card
40	Download Error E40 Module ID Card No. xx/xx	Download result failure 1 Engine download failure.	• Cycle the machine OFF/ON and re-try
41	Download Error E41 Module ID Card No. xx/xx	Download result failure 2 Fax download failure.	• Cycle the machine OFF/ON and re-try

Downloaded from www.Manualslib.com manuals search engine

	Display	Details	Recovery
42	Download Error E42 Module ID Card No. xx/xx	Download result failure 3 Operation panel or language download failed. For this error, sometimes the message may not be displayed.	• Cycle the machine OFF/ON and re-try
43	Download Error E43 Module ID Card No. xx/xx	Download result failure 4 Print download failed.	• Cycle the machine OFF/ON and re-try
44	Download Error E44 Module ID Card No.	Download result failure 5 The data targeted for the write operation could not be accessed.	• Turn the machine power OFF. Then, install a new System SD Card into SD card slot-1.
50	No Valid Data E50	Download invalid The source data for the update could not be authenticated.	• Use the correct SD card.
51	(no display)	Remote ROM update failure 1 The source data for the ROM update is corrupted because the machine is operating and an SC code has been issued.	• Turn the machine power OFF/ON and try again.
52	(no display)	Remote ROM update failure 2 The source data received for the ROM update is corrupted; it failed a SUM check due to its abnormal length.	• Try again with the correct data.
53	(no display)	Download result failure 6 The previous download in progress was cancelled.	• Do the download procedure again.

Downloaded from www.Manualslib.com manuals search engine

4.1.4 IMPORTANT SP CODES

Here is a list of important SP codes that you may need during troubleshooting.

SP5802	Free Run Mode	Execute this SP to force base engine to run in the free run mode for testing.
SP5803	Input Check	Displays the signals received from sensors and switches. Refer to the detailed tables in "4. Service Tables".
SP5804	Output Check	Switches electrical components one by one for testing. Refer to the detailed tables in "4. Service Tables".
SP5810	Cancel Fusing SC Code	Use this to cancel a fusing unit SC code to return the machine to normal operation after you repair the machine.
SP5990	SMC Printout	Prints the SMC Report. Some SC codes (logged SPs) are listed only in the SMC Report and do not appear on the operation panel display.
SP7401	SC Codes	Displays the total number of SCs logged.
SP7403	SC History	Displays information about the 10 most recent service calls (Code, Total, Date, and Details).
SP7801	ROM Ver	Displays the ROM version numbers of the main machine and connected peripheral devices.
SP7832	Self-Diagnostic Report Details	Push [#] to display a list of error codes. Nothing is displayed if no errors have occurred.

NOTE: For more information about these and other SP codes, see "4. Service Tables".

Downloaded from www.Manualslib.com manuals search engine

4.2 SPECIAL PROCEDURES

4.2.1 SP2181 030 (ALIGNMENT RESULT) ERRORS

After **SP2181 030** executes normally, you should see:

1

If you see any number other than a "1", this indicates an error.

Code	Error	Problem	Recovery
0	None		Default display.
1	None		No action required.
2	Failure	Large amount of skew. Large amount of K skew. Large amount of skew in every color.	Print a trim pattern with **SP2109 002** Pattern **10**.
		Density too light.	Print a coverage pattern with **SP2109 002** Pattern **1**. Check the images.
		ITB scratched.	Replace the ITB.
12	Abnormal detection pattern	ITB misaligned.	Reinstall ITB.
		SP2153 023 set to **1** (OFF).	Set **SP2153 023** to **0** (ON).
		Image density too light.	Output a coverage pattern with **SP2109 002** Pattern **1**. Check the images.
		Dirty, abnormal images.	Output Pattern **1**, **18**, or **20** with SP2109 002 and check the images.

Downloaded from www.Manualslib.com manuals search engine

Code	Error	Problem	Recovery
21-23	Auto density out of range (over or lower)	ITB misaligned	Reinstall ITB.
		Image density too light, uneven.	Output a coverage pattern with **SP2109 002** Pattern **1**. Check the images.
		Connector loose. Connector dirty. Harness defective. Other	Check the ID sensor and its connection.
31-33	Amount of skew calculated in the coverage pattern abnormal.	ITB misaligned	Reinstall ITB.
		SP2153 023 set to **1** (OFF).	Set **SP2153 023** to **0** (ON).
		Large amount of K skew.	Print a trim pattern with **SP2109 002** Patten **10**.
		Image density too light, uneven.	Output a coverage pattern with **SP2109 002** Pattern **1**. Check the images.
41-43	Intersecting lines of the grid pattern.	ITB misaligned	Reinstall ITB.
		Image density too light.	Output a coverage pattern with **SP2109 002** Pattern **1**. Check the images.
		Dirty, abnormal images.	Output Pattern **1**, **18**, or **20** with SP2109 002 and check the images.
51-53	The settings of sensor lights 1, 2, 3 are abnormal.	ITB misaligned	Reinstall ITB.
		SP2153 023 set to **1** (OFF).	Set **SP2153 023** to **0** (ON).
		The settings of sensor lights 1, 2, 3 are different from the default setting, which is 2050.	Set **SP2153 020~022** to 2050 (default) and check the image.
		Dirty, abnormal images.	Output Pattern **1**, **18**, or **20** with SP2109 002 and check the images.
		Connector loose. Connector dirty. Harness defective. Other	Check the ID sensor and its connection.
60	Communication err.	Communication err	Turn off and turn on the main switch.

Downloaded from www.Manualslib.com manuals search engine

Code	Error	Problem	Recovery
61	Time out of detecting MUSIC pattern.	ITB misaligned	Reinstall ITB.
		SP2153 023 set to 1 (OFF).	Set SP2153 023 to 0 (ON).
			The settings of sensor lights 1, 2, 3 are different from the default setting, which is 2050. (These settings are done with SP2153 020~022.)
		Dirty, abnormal images.	Output Pattern 1, 18, or 20 with SP2109 002 and check the images.
		Connector loose. Connector dirty. Harness defective. Other	Check the ID sensor and its connection.

Downloaded from www.Manualslib.com manuals search engine

Image Position Adjustment

A MUSIC error occurs when a large amount of skew occurs beyond the acceptable range, or when the K sensor is out of position. Such errors can be corrected manually to correct skew. However, these adjustments cannot correct problems caused by physical damage to the ITB, filming, density degradation, or a dirty sensor.

1. Load some A3/DLT paper in Tray 1. Make sure that the side and bottom fences are set properly.
2. Do **SP1002 001** (Side-to-Side Reg – Tray 1) and set it to "**0**".
3. Do **SP2109 002** (Test Pattern) then select and print pattern **10: Trim Area**.
4. Do **SP2101 001** so the left and right margins are 1.5 mm. If the image is cut off at the edge, use the 1-dot pattern.
5. If any color is separated from black more than 1 mm, do **SP2101 002~004** to bring each color closer to K.

Important

- Black skew can cause part of the image to shift off the paper.
- Normally, the settings of **SP2102 001~004** should be reset to the values in the SMC report or the values printed on the A5 sheet provided with a new laser unit.
- Normally, these values do not change unless the NVRAM becomes corrupted.
- Most machines can be adjusted with these values: K: -40, M:-20, C:-10, Y: -5. Use these values if other information is not available.

Downloaded from www.Manualslib.com manuals search engine

4.2.2 COLOR REGISTRATION ADJUSTMENT

Color Registration Error Correction

1. Start SP 2109 002 and select pattern 1 (1-dot line), then push the “OK” button.
2. Push the “Copy Window” button. Then select A3/DLT paper, and push the “Start” button to print the pattern.
   NOTE: Make sure that “Full Color Mode” is selected before you push the Start button.

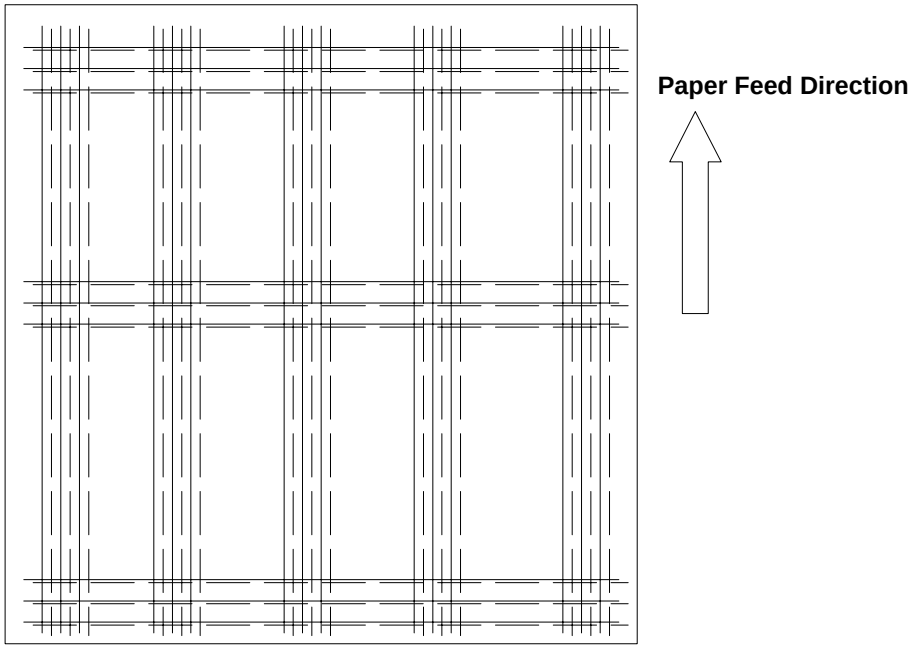

B132R930.WMF

In the example above, the dotted lines are magenta, cyan, or yellow, and the solid lines are black.

3. Lay the test pattern flat, and use a lupe to examine the grid patterns.

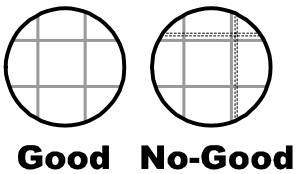

B132R942.WMF

Downloaded from www.Manualslib.com manuals search engine

4. Correct the errors in the vertical lines (this corrects errors in the main scan direction). See the following table for how to do this.
   NOTE: In the table, a dotted line indicates a colored line (C, M, or Y). For example, the first row of the table shows you how to adjust the machine if a colored line is to the right of the black line on the test pattern.

	SP	Action
	2101 002 (M) 2101 003 (C) 2101 004 (Y) **Unit of adjustment:** One dot (43.2 µm)	Decrease the value
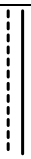		Increase the value

5. Correct the errors in the horizontal lines (this corrects errors in the sub scan direction). See the following table for how to do this.

	SP	Action
	2101 013 (M) 2101 014 (C) 2101 015 (Y) **Unit of adjustment:** One line (84.6 µm)	Increase the value
		Decrease the value

6. Do steps 1 and 2 again.
7. If there are color registration errors, then do steps 1 through 6 again.

Downloaded from www.Manualslib.com manuals search engine

Color Skew Error Correction

1. Start SP 2109 002 and select pattern 1 (1-dot line), then push the “OK” button.
2. Push the “Copy Window” button. Then select A3/DLT paper, and push the “Start” button to print the pattern.
   NOTE: Make sure that “Full Color Mode” is selected before you push the Start button.

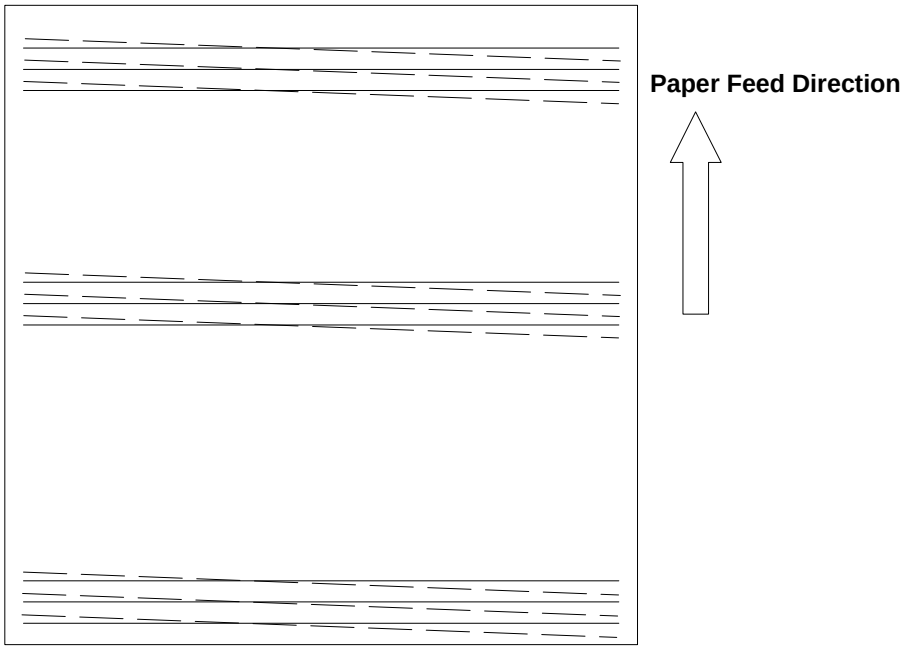

B132R931.WMF

In the example above, the dotted lines are magenta, cyan, or yellow, and the solid lines are black.

3. Correct the skew. See the following table for how to do this

Right	SP	Action
	2104 001 (M)	Increase the value
	2104 002 (C) 2104 003 (Y)	Decrease the value

Downloaded from www.Manualslib.com manuals search engine

Overall Check

1. After you do the color registration error and color skew corrections, do a forced MUSIC again, with SP 2111 001.
2. Do SP 2109 002 and print pattern 1 (1-dot line) on A3/DLT paper again. Check the skew and color registration. If they are still not acceptable, do the forced MUSIC again.
3. Do SP 2181-030 to make sure that the forced MUSIC was done correctly. If the result is '1', then each color was aligned correctly.
   If "1" is not shown, then please see section 4.2.1.

Color Registration at the Left and Right Folds of the Test Pattern

Do this procedure after you complete "Color Registration Error Correction" and "Color Skew Error Correction".

1. Do SP 2109 002 and print pattern 1 (1-dot line) on A3/DLT paper.
   NOTE: Make sure that "Full Color Mode" is selected before you press the Start button.

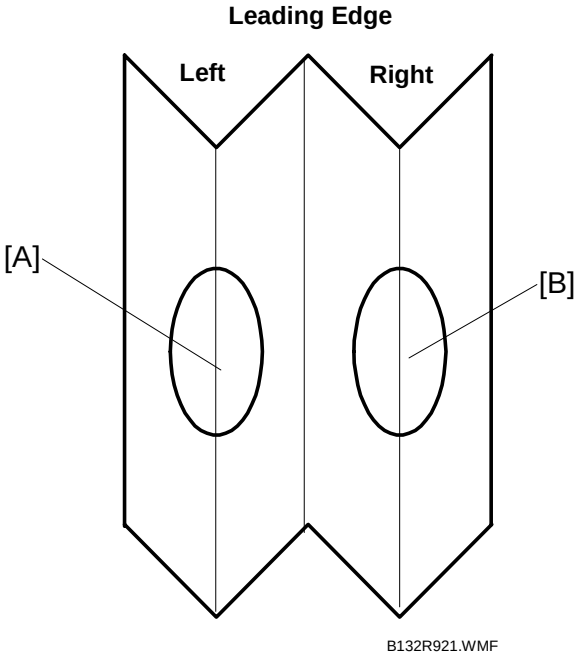

2. Fold the test pattern lengthways in half, then fold it in half again as shown above.
3. Lay the test pattern flat, and use a lupe to examine the grid patterns at the first crease [A] and third crease [B].

Downloaded from www.Manualslib.com manuals search engine

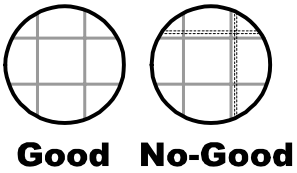

B132R942.WMF

When viewed through the lupe, the grid lines on the left and right side should be perfectly aligned (**Good**) and not misaligned (**No-Good**).

4. If the lines are misaligned (**No-Good**), use the lupe to measure distance between the black vertical lines and each of the colored vertical lines (C, M, Y). Measure this on the left and right folds:

   If there is a gap between the black lines and a colored line, measure it and correct it with SPs as shown in the tables below.

Left	Right	Remarks	SP	Action
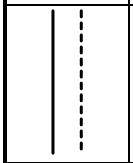	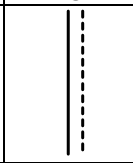	Gap on the left is different from the gap on the right	2112 001 (M) Left Fold 2112 002 (M) Right Fold 2112 003 (C) Left Fold 2112 004 (C) Right Fold 2112 005 (Y) Left Fold 2112 006 (Y) Right Fold Unit of adjustment: 50 µm	To move a color toward the left edge, decrease the SP value. To move a color toward the right edge, increase the SP value.
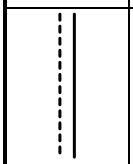	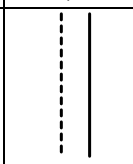			
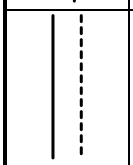	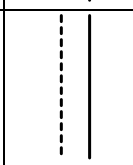	Gaps are the same or different.		
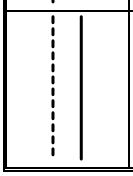	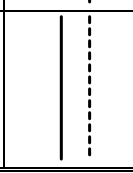			

Downloaded from www.Manualslib.com manuals search engine

4.2.3 SP3812 001 (DevSetup Execute) ERRORS

After **SP3812 001** executes normally, you should see four 1s:

1111

Reading from left to right, each "1" indicates the status of the PCUs: K, M, C, Y.

If you see any number other than a "1", this indicates an error.

SP3812 001 Error Codes

Code	Error	Problem	Recovery
2	Execution Interrupted	Door was opened, or another color returned an error. Execution halts at the first error encountered or if the front door is opened during execution.	Check the preceding error codes. Never open the front door during execution.
3	Vt Abnormal	The reading of Vt (TD sensor output) is less than 5 V.	Check the operation panel for a developer set error (SC336~SC339). Check the PCUs and confirm that all the film seals have been removed to release the developer from the developer cartridge.
4	Did Not Execute	SP Default	Displayed when you open this SP code. No action is necessary.
8	Toner Supply Abnormal	At the end of the toner filling cycle, the toner end sensor detected no toner.	Check the toner supply unit.
9	Vtcnt Abnormal	Vtref (control reference voltage) could not be adjusted to within 0.2 V of Vt (TD sensor output).	This is a TD sensor adjustment error (SC372~sC375). Execute SP3801 again for the PCU that returned the error. If this does not recover operation, check the following: • Film seal not removed from a new developer pack • TD harness sensor disconnected, loose or defective • TD sensor defective • Harness between TD sensor and drawer disconnected, defective

Downloaded from www.Manualslib.com manuals search engine

4.2.4 PROCESS CONTROL TROUBLESHOOTING

Summary of Process Control SC Codes

This is a list of SC codes that may occur during process control. For more, please refer to the process control tables on the following pages.

Pre-Processing Check	
SC316 to SC319	Vpp is not within the normal range (Vpp: the AC current applied to the charge roller to compensate for changes in the ambient temperature and humidity). Insufficient charge causes white spotting and too much charge causes toner to film on the surface of the drum. Vpp must be > 2.8 kV.
SC400	ID sensor could not be calibrated. An abnormal ID sensor condition is detected when before calibration begins, Vsg < 0.5V or after calibration, Vsg cannot be adjusted to 4.0±0.2V.
SC418	Correct current could not be supplied to the ID sensor.
SC436 to SC439	A problem is detected with a potential sensor during calibration.
Potential Control	
SC410 to SC413	The development gamma is out of range (not between 0.3 and 6.0) for a color.
SC414 to SC417	Vk is out of range (not within ±150V) for a color. If the development potential is less than Vk, toner is not applied to the drum.
SC420 to SC423	Vd cannot be adjusted to the target voltage for a drum.
SC424 to SC427	The potential sensor detects that Vpl is not ±10V of the target Vpl after exposure of the ID sensor patterns.
SC432 to SC435	The residual voltage on a drum is greater than -200V.
TD Sensor Output Calibration	
SC360 to SC367	An abnormal condition is detected when output of one of the TD sensors fails to fall within the range of 0.5V to 4.5V.
Process Control Gamma Correction	
SC410 to SC413	The development gamma for black, magenta, cyan, or yellow is not within range (0.3 to 6.0).
SC414 to SC417	The development start voltage (Vk) for black, magenta, cyan, or yellow PCU is not within range (±150V)

Downloaded from www.Manualslib.com manuals search engine

Process Control Self-Check: SP3821

After the process control self-check is executed manually with SP3820, you can execute **SP3821** to check the results of the self-check. The possible error codes are listed in the "Displayed Code" column in the table below.

When you do **SP3821**, the normal display (no errors) will look like this:

10101010

Reading from left to right each "10" represents a color: K, M, C, Y.

If a problem occurs, the code will appear in the column for the color PCU where the error has occurred. For example, If a Vdhome error (Code 15) (see folloeing table) occurs in the M PCU, the display will look like this:

10151010

Or if an ID sensor error (Code 21) (see following table) occurs in the Y PCU:

10101021

NOTE: "99" displays while **SP3821** executes.

Important: **Noise and static electricity can damage the many sensors that are used during the process control self-check. Because of this, always turn the machine OFF before doing any procedure described below that requires disassembly.**

Downloaded from www.Manualslib.com manuals search engine

General	Displayed Code	Item	Major Cause	Action
Normal	10	Successful	---	---
Potential Sensors	15	VdHome Error 1	V0 (**SP3571**) above –700V, or VdHome (**SP3572**) above –700V. • The window of the potential sensor probe fouled with toner • Potential sensor damaged	• Do **SP2260 001** to check the function of the potential sensor. • Do **SP2261** to check the Vd, Voffset readings. For more, see Section 6. Development has recovered if the Vd is -700V and offset is -10V. • Remove the PCU. Use a blower brush to clean the window of the potential sensor probe, then check the sensor again with **SP2601**. • If normal operation cannot be restored, replace the potential sensor probe.
	16	VdHome Error 2	V0 (**SP3571**) below –700V, or VdHome (**SP3772**) below –500V. • Potential sensor relay board damaged • Drum abnormal • Charge roller damaged • Drum motor not operating	• Do **SP2260 001** to check the function of the potential sensor. • Do **SP2261** to check the Vd reading. For more, see Section 6.11. Development has recovered if the Vd is -700V. • Remove the malfunctioning PCU with an functioning PCU, turn the machine OFF then ON, then do the potential sensor check again. • If the replaced PCU does not function normally, then the problem is on the machine side, or the potential sensor relay board is malfunctioning. • If the replaced PCU functions normally, then there may be a problem with the drum or the charge unit. Replace the PCU.
	17	VdHome Calculation Error	VdHome could not be calculated. This is a software calculation error (not a hardware problem).	• Switch the machine OFF/ON then execute **SP3820 001**.
ID Sensors	21	ID Sensor Vsg Adjust Error	Vsg_reg (**SP3121**) is out of range (not within 4.0±0.2V). • ID sensor fouled with dust, toner • ITB undulating or out of position	• Remove the ITB unit. • Make sure the belt is mounted correctly. • Clean the windows of the ID sensors with alcohol and a clean cloth. • Be sure to wipe the sensor apertures with a wet cloth. A dry cloth may generate static which can attract dust.
	22	ID Sensor LED Current Error	LED PWM (**SP3131**) greater than 3000. • ID sensor fouled with dust, toner • ID sensor deteriorated	• Remove the ITB unit and check the ID sensors. • Clean the windows of the ID sensors with alcohol and a clean cloth. • Be sure to wipe the sensor apertures with a wet cloth. A dry cloth may generate static which can attract dust. • If the apertures are clean, then the LED of an ID sensor may have deteriorated. Replace the ID sensor plate.

Downloaded from www.Manualslib.com manuals search engine

General	Displayed Code	Item	Major Cause	Action
	23	ID Sensor Output Error	Vsg_reg (**SP3121**) less than 0.5V. • ID sensor harness loose, disconnected, damaged • ID sensor damaged **Note**: Vsg_reg refers to the reading of the drum surface done with the direct reflection sensors in both the color and black ID sensors.	• Remove the ITB unit. • Check the ID sensor harness connections and make sure that they are tight. • Check the harnesses for breaks. • If the harnesses are undamaged and tightening the connections does not solve the problem, replace the ID sensor plate.
AC Charge	31	AC Charge Adjust Error 1	Vpp could not be adjusted after 20 attempts. • Bias path defective • Charge gap abnormal (too large) • Charge roller dirty • Drum coated with film	• Make sure that the bias path and drum are grounded correctly. • Check the drum and both ends of the charger roller for any foreign matter. • Check the gap between the charge roller and the drum to confirm that it is not too large. • If the grounds and gap is normal, clean the charger roller or replace it.
	32	AC Charge Adjust Error 2	Vpp greater than 2.80 kV. • Bias path defective • Charge gap abnormal • Charge roller dirty, defective	• Make sure that the bias path and drum are grounded correctly. • Check the drum and both ends of the charger roller for any foreign matter. • Check the gap between the charge roller and the drum to confirm that it is not too large. • If the grounds and gap is normal, clean the charger roller or replace it.

Downloaded from www.Manualslib.com manuals search engine

General	Displayed Code	Item	Major Cause	Action
ID Sensor Pattern Detection	55	Development Gamma Error 1	Development gamma (**SP3561**) greater than 6.0 (mg/cm^2/-kV).	• Switch the machine OFF and ON then do **SP3820 002**. • Do **SP3561 005** to **008** to confirm that development gamma is within the target range (-0.15 to +0.25) • If not within the target range, do the procedure again. If the machine returns SC410 to SC413 and process control does not end normally, do this procedure: 1. Change the settings for **SP3301 001** to **004** from "1" (PID) to "0" (Fixed). 2. Do **SP2109 002** and select Pattern 12. 3. Change the settings of **SP2109 005** to **008** from 63 to 0, except for the color which showed a development gamma error. 4. Return to the copy window and do the test print at least 10 patterns. 5. Do **SP3820 002**. • If the patterns are normal, do Steps 2 and 3. • If the patterns are not normal, repeat Steps 2 to 5. 6. Do **SP3301 001** to restore PID toner supply.

Downloaded from www.Manualslib.com manuals search engine

General	Displayed Code	Item	Major Cause	Action
	56	Development Gamma Error 2	Development gamma (**SP3561**) less than 0.3 (mg/cm^2/-kV) • Toner supply abnormal • Image transfer power pack defective • Toner shield glass dirty	1. Do **SP2109 002** and select Pattern **12**. 2. Do **SP2109 005** to **008** and change the settings of these SP codes from **63** (default) to **0**. 3. Return to the copy window and do the test print 1 pattern. 4. Check the pattern to determine whether the image density is extremely light. 5. Turn the machine OFF. 6. Open the front door, remove the toner supply unit and check the toner shield glass for dirt. 7. Remove the face plate, replace the malfunctioning PCU with a functioning PCU, then turn the machine ON and repeat Steps 1 to 3 to print the coverage test pattern. 8. If normal operation cannot be recovered: • Replace the image transfer power pack. • Open the development unit to see if there is too much or too little developer. • If the developer supply is normal, remove the toner end sensor to see if there is toner in the sub hopper. • If the sub hopper is empty, the powder pump is defective. Replace the toner supply unit. • If the sub hopper is full, the toner end sensor is defective. Replace the toner supply unit. • If the level of developer is either too high or too low, replace the developer.
	57	Vk Error 1	Vk (development start voltage) greater than 150V.	• Replace the developer.
	58	Vk Error 2	Vk (development start voltage) less than –150V.	• Replace the developer.
	59	Insufficient Active Data	Not enough active data to calculate development gamma (only "0" or "1").	• Do the "Action" procedure for "Displayed code #55" described above.

Downloaded from www.Manualslib.com manuals search engine

General	Displayed Code	Item	Major Cause	Action
Potential Adjustment	61	LD Failure	A laser diode failed to fire and write the ID sensor pattern. • Toner shield glass dirty • PCU set incorrectly • Laser diode defective	1. Copy the color test pattern to determine which color is abnormal. 2. Turn the machine OFF. 3. Open the front door, remove the toner supply unit and check the toner shield glass for dirt. 4. Reassemble the machine, switch the machine ON, then do **SP3820 001**. **Notes** • The probes of the potential sensors of each PCU are located at different positions. This failure can be caused by installing a potential sensor at the incorrect position. However, you can eliminate this as a cause if a new PCU is installed. (A guide ensures prevents a PCU from being installed at the wrong location.) • If the machine fails to return SC240 to SC243, you can eliminate a defective LD as the cause of the problem.
	62	Vr Error	Vr (residual voltage) greater than –200V. • Drum deteriorated • Toner shield glass dirty	• Open the front door, remove the toner supply unit, and check the toner shield glass for dirt. • Clean the glass then do **SP3820 001**. • If this does not solve the problem, replace the drum.
	63	Vd Adjust Error	Vd could not be adjusted within ±10V. • Charge roller dirty • Drum defective	• Replace the charge roller • Replace the drum.
	64	Vpl Adjust Error	Vpl could not be adjusted within ±5V. • Drum deteriorated due to filming • Charge roller dirty	• Replace the charge roller • Replace the drum.
Abnormal End	90	Potential Adjust Error	**SP3501** (potential control method) is set to 1 (Fixed).	• Do **SP3501 001** and select "0" (Auto).
	99	Forced Termination	Door open, power OFF, or other problem interfering with process control self-check.	Make sure the machine is turned ON. Make sure the front door is closed completely.

Downloaded from www.Manualslib.com manuals search engine

4.2.5 COLOR ADJUSTMENT FOR CONNECTED COPIERS

This procedure may be required for copiers after they are connected with the Copy Connector (B328). Do this procedure only if you or the customer notices that the color quality between the two copiers is different.

The scanner gamma curve and printer gamma curve are adjusted at the factory for each machine. However, small differences between machines may arise due to fluctuations in the tolerances of scanner or image processing components.

The following two adjustments calibrate these differences to within acceptable standards.

1. Color Adjustment with Connection Kit Color Test Chart (P/N VSST9501)

This adjusts the scanner gamma curve of each machine [A], [B] connected with the Copy Connector (B328). The scanner gamma curve is adjusted to equalize the scanner input with the scanner output.

2. ACC (Auto Color Calibration)

This adjusts the printer gamma curves [E], [F] of each machine connected with the Copy Connector (B328).

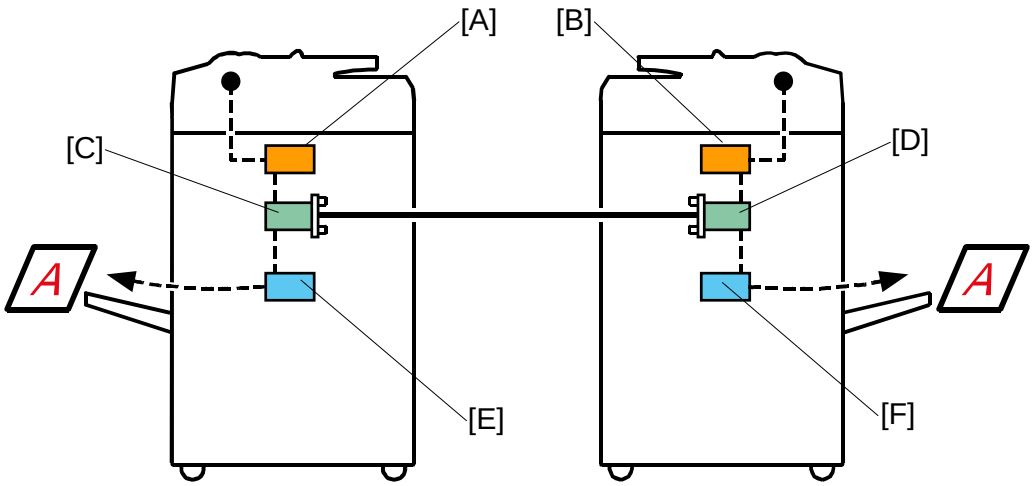

B132D100.WMF

[A]: Scanner gamma curve – Machine 1
[B]: Scanner gamma curve – Machine 2
[C]: HDD – Machine 1
[D]: HDD – Machine 2
[E]: Printer gamma curve – Machine 1
[F]: Printer gamma curve – Machine 2

Downloaded from www.Manualslib.com manuals search engine

To adjust the main machine:

1. Place the test charge Connection Kit Color Test Chart (P/N VSST9501) on the exposure glass, with the arrow mark on the chart aligned with the left rear corner.
2. Do **SP4954 001** (Read/Restore Std) and press [Execute].
   After about 10 seconds, the "Completed" message appears.

   Important: If "Completed" appears immediately after pressing [Execute], the adjustment may have failed. Do the procedure again.
3. After doing **SP4954 001**, do the ACC procedure. For more, see Section "1. Installation (Pg.1-33)"

To adjust the sub machine:

4. Do Steps 1 to 3 for the sub machine.

Compare the results

5. Set the two machines for full color, and do some sample color copies.
6. Compare the results from the two copiers. If the results are not good, do the procedure again from step 1.

Downloaded from www.Manualslib.com manuals search engine

4.3 SERVICE CALL CONDITIONS

4.3.1 SERVICE MODE LOCK/UNLOCK

At locations where the machine contains sensitive data, the service engineer cannot operate the machine until the Administrator turns the service mode lock off. This function makes sure that work on the machine is always done with the permission of the Administrator.

1. If you cannot go into the SP mode, ask the Administrator to log in with the Operator Tool and then set “Service Mode Lock” to OFF. After he or she logs in:

   Operator Tools > System Settings > Administrator Tools > Service Mode Lock > OFF

   - This unlocks the machine and lets you get access to all the SP codes.
   - The Service engineer can do servicing on the machine and turn the machine OFF and ON. It is not necessary to ask the Administrator to log in again each time the machine is turned ON.

2. If you must use the printer bit switches, go into the SP mode and set **SP 5169** to “**1**”.

3. After machine servicing is completed:
   - Change **SP 5169** from “**1**” to “**0**”.
   - Turn the machine OFF and ON. Tell the administrator that you completed servicing the machine.
   - The Administrator will then set the “Service Mode Lock” to ON.

Downloaded from www.Manualslib.com manuals search engine

4.3.2 SERIES SERVICE CALL CONDITIONS

There are 4 levels of service call conditions.

Level	Definition	Reset Procedure
A	Fusing unit SCs displayed on the operation panel. The machine is disabled. The operator cannot reset the SC.	Enter SP mode, then turn the main power switch OFF and ON.
B	SCs that disable only the features that use the defective item. These SCs are not shown to the operator under normal conditions. They are displayed on the operation panel only when the defective feature is selected.	Turn the main power switch OFF and ON.
C	SCs that are not shown on the operation panel. They are internally logged.	Logging only
D	Turning the operation switch (or main power switch) OFF then ON resets these SCs. These SCs are displayed on the operation panel and displayed again if the error reoccurs.	Turn the operation switch (or main power switch) OFF and ON, or the machine reboots automatically. (See below.)

When a Level “D” SC code occurs

When a Level D SC occurs, a screen opens on the operation panel to tell the operator:

- An error occurred
- The job in progress will be erased
- The machine will reboot automatically after approximately 30 seconds.

The operator can wait until the machine reboots automatically or press “Reset” on the screen to reset the machine immediately and go back to the copy screen.

If the operator does not presses “Reset”

The next message tells the operator that the machine will reset automatically and that the previous job was lost and must be started again. After reading the message, the operator presses “Confirm” on the screen. The next screen shows the number and title of the SC code, and stops until the operator turns the machine OFF and ON.

If the operator presses “Reset”

If the operator presses "Reset" to bypass the 30-second interval for the machine to reboot, the machine reboots immediately and the operation panel displays the copy screen.

Important

- Do not try to use the operation panel during an automatic reboot.

Downloaded from www.Manualslib.com manuals search engine

4.3.3 SC CODE DESCRIPTIONS

Important

- If a problem concerns a circuit board, disconnect and reconnect the connectors and then test the machine. Often a loose or disconnected harness is the cause of the problem. Always do this before you decide to replace the PCB.
- If a motor lock error occurs, check the mechanical load before you decide to replace the motor or sensors.
- When a Level “A” or “B” SC occurs while in an SP mode, the machine cannot display the SC number. If this occurs, check the SC number after leaving the SP mode.
- The machine reboots automatically when the machine issues a Level “D” SC code. This is done for Level “D” SC codes only. (☛4.3.2)

⚠CAUTION

Never turn OFF the main power switch when the power LED is lit or flashing. To avoid damaging the hard disk or memory, press the operation switch to switch the power OFF, wait for the power LED to go OFF, and then switch the main power switch OFF.

NOTE: The main power LED (⏻) lights or flashes while the platen cover or ARDF is open, while the main machine is communicating with the network server, or while the machine is accessing the hard disk or memory for reading or writing data.

Downloaded from www.Manualslib.com manuals search engine

SC codes Group 1: Scanning

SC101	**D**	Exposure lamp error	
		The white level peak did not reach the prescribed threshold when the white plate was scanned.	• Dirty optics • Exposure lamp defective • Exposure lamp does not turn ON • Lamp stabilizer defective • High voltage line leak • Power/signal harness defective

SC120	**D**	Scanner home position error 1	
		The scanner home position sensor did not detect the home position (did not go OFF) after the scanner moved forward 20 mm..	• Scanner motor driver board defective • Scanner motor defective • Scanner HP sensor defective • Harness between scanner motor and scanner I/O board disconnected or broken.

SC121	**D**	Scanner home position error 2	
		The scanner home position sensor did not go ON after the scanner moved forward 1 mm and the feeler entered the HP sensor.	• Scanner motor defective • Scanner HP sensor disconnected, defective

SC141	**D**	Black level detection error	
		During AGC the value for black level was not within ±2 of the prescribed value. The copier can reproduce monochrome, but not color.	• SBU defective • Harness defective

SC142	**D**	White level detection error	
		During AGC the value for white level was not within ±7 of the prescribed value.	• Exposure lamp defective • Harness disconnected, damaged • Dirty exposure glass, optics • Scanner motor, drive assembly defective • SBU board defective

Downloaded from www.Manualslib.com manuals search engine

SC144	**D**	SBU (Sensor Board Unit) communication error		
		When the machine is switched ON, or when the machine returns to full operation from the energy save mode, the machine can not access the SBU register, or the SBU register values are abnormal.		• Dirty exposure glass or optics • SBU board defective • SBU harness disconnected, defective

SC161	**D**	IDU (Image Discrimination Unit) error		
		After the command is written into the DFID self-diagnosis startup register, the correct value is not stored in the register for the prescribed length of time after power ON. -or- After the negate interruption of FGATE occurs, IDU is not recognized within the prescribed time during scanning.		• IPU board defective (defective connection between ASIC and DFID, defective LSYNC-signal)

SC180	**D**	Scanner fan lock		
		001	One of the fan motors next to the exposure lamp did not switch ON within 0.5 sec after the CPU issued the ON signal.	• Fan defective • Foreign object interfering with operation of fan • Motor harness loose, disconnected, or broken • SIOB defective • SBU defective
		002	The scanner fan motor next to the SIOB did not switch ON within 0.5 sec. after the CPU issued the ON signal.	

SC195	**D**	Machine serial number error	
		The number registered for the machine serial number does not match.	• Confirm the correct serial number of the machine in the specifications **Important!** **WHEN SC195 OCCURS, THE SERIAL NUMBER MUST BE INPUT. PLEASE CONTACT YOUR TECHNICAL SUPERVISOR.** .

Downloaded from www.Manualslib.com manuals search engine

SC codes Group 2: Exposure

SC202	**D**	Polygon motor error 1: ON timeout	
		The polygon mirror motor does not reach the targeted operating speed: • Within 10 seconds after turning ON. • Within 10 sec. after changing speed	• Harness to polygon motor driver board disconnected, defective • Polygon motor defective • Polygon motor driver board defective • Polygon motor defective.

SC203	**D**	Polygon motor error 2: OFF timeout	
		The polygon mirror motor does leave the READY status within 10 seconds after the polygon motor switches OFF.	• Harness to polygon motor driver board disconnected, defective • Polygon motor defective • Polygon motor driver board defective • Polygon motor defective.

SC204	**D**	Polygon motor error 3: Polygon motor lock signal error	
		The polygon motor lock signal goes HIGH (inactive) while the laser diode is firing.	• Harness to polygon motor driver board disconnected, defective • Polygon motor defective • Polygon motor driver board defective

SC205	**D**	Polygon motor error 4: Polygon motor lock signal unstable	
		When the polygon motor switches ON, or after the speed of the motor changes, the polygon motor lock signal goes HIGH (inactive).	• Harness to polygon motor driver board disconnected, defective • Polygon motor defective • Polygon motor driver board defective

SC210	**D**	Laser beam detection error 1: K (Black)	
SC211	**D**	Laser beam detection error 1: Y (Yellow)	
SC212	**D**	Laser beam detection error 1: M (Magenta)	
SC213	**D**	Laser beam detection error 1: C (Cyan)	
		The laser synchronization sensor failed to detect the beginning and end of the laser beam flash for the designated color onto the polygon mirror while the mirror is rotating at the prescribed number of revolutions.	• Laser synchronization detector sensor connection loose, not connected • Laser synchronization detector sensor defective

Downloaded from www.Manualslib.com manuals search engine

SC220	D	Laser Synchronization Detector Error 1: K Leading Edge: LD0	
		While the polygon motor is rotating normally, no synchronizing detection signal is output for LD0 black, or leading edge, even after the laser diode has been firing for 2 sec.	• Harness between the laser synchronizing detector and I/F unit is disconnected, defective • Laser synchronizing detector defective • Beam not reflected in photo detection • GAVD (ASIC) on the BICU is defective • LD driver board defective • LDB defective • BICU defective • Check board connections, replace

SC221	D	Laser Synchronization Detector Error 2: K Leading Edge (Other than LD0)	
		While the polygon motor is rotating normally, no synchronizing detection signal is output for black, leading edge for any LD other than LD0, even after the laser diode has been firing for 2 sec.	• Beam not reflected in photo detection • GAVD (ASIC) (ASIC) on the BICU defective • LD driver defective • LDB defective • BICU defective • Check board connections, replace

SC222	D	Laser Synchronization Detector Error 1: Y Leading Edge: LD0	
		While the polygon motor is rotating normally, no synchronizing detection signal is output for LD0 yellow, leading edge, even after the laser diode has been firing for 2 sec.	• Harness between the laser synchronizing detector and I/F unit is disconnected, defective • Laser synchronizing detector defective • Beam not reflected in photo detection • GAVD (ASIC) (ASIC) on the BICU defective • LD driver board defective • LDB defective • BICU defective • Check board connections, replace

SC223	D	Laser Synchronization Detector Error 2: Y Leading Edge (Other than LD0)	
		While the polygon motor is rotating normally, no synchronizing detection signal is output for yellow, leading edgefor any LD other than LD0, even after the laser diode has been firing for 2 sec.	• Beam not reflected in photo detection • GAVD (ASIC) (ASIC) on the BICU defective • LD driver defective • LDB defective • BICU defective • Check board connections, replace

Downloaded from www.Manualslib.com manuals search engine

SC224	D	Laser Synchronization Detector Error 1: M Leading Edge: LD0	
		While the polygon motor is rotating normally, no synchronizing detection signal is output for LD0 magenta, leading edge, even after the laser diode has been firing for 2 sec.	• Harness between the laser synchronizing detector and I/F unit is disconnected, defective • Laser synchronizing detector defective • Beam not reflected in photo detection • GAVD (ASIC) on the BICU defective • LD driver board defective • LDB defective • BICU defective • Check board connections, replace

SC225	D	Laser Synchronization Detector Error 2: M Leading Edge (Other than LD0)	
		While the polygon motor is rotating normally, no synchronizing detection signal is output for magenta, leading edge for any LD other than LD0, even after the laser diode has been firing for 2 sec.	• Beam not reflected in photo detection • GAVD (ASIC) on the BICU defective • LD driver defective • LDB defective • BICU defective • Check board connections, replace

SC226	D	Laser Synchronization Detector Error 1: C Leading Edge: LD0	
		While the polygon motor is rotating normally, no synchronizing detection signal is output for LD0 cyan, leading edge, even after the laser diode has been firing for 2 sec.	• Harness between the laser synchronizing detector and I/F unit is disconnected, defective • Laser synchronizing detector defective • Beam not reflected in photo detection • GAVD (ASIC) on the BICU defective • LD driver board defective • LDB defective • BICU defective • Check board connections, replace

SC227	D	Laser Synchronization Detector Error 2: C Leading Edge (Other than LD0)	
		While the polygon motor is rotating normally, no synchronizing detection signal is output for cyan, leading edgefor any LD other than LD0, even after the laser diode has been firing for 2 sec.	• Beam not reflected in photo detection • GAVD (ASIC) on the BICU defective • LD driver defective • LDB defective • BICU defective • Check board connections, replace

Downloaded from www.Manualslib.com manuals search engine

SC230	**D**	FGATE error 1: Feedback remains HIGH for K write	
		After the start of timing to create the black image, the PFGATE register of the GAVD (ASIC) does not assert, even after 5 sec. when: • Images are created on the drum. • MUSIC patterns are created on the transfer belt. The BICU received no feedback (LOW signal) from the LD unit to indicate that the lasers started firing at the prescribed time to create the patterns.	• GAVD (ASIC) on the BICU defective • PCI I/F on the IPU defective • ASIC on the IOB defective • Controller board disconnected, defective • Harness between the BICU and LDB unit disconnected, loose, or defective. • Check board connections, replace

SC231	**D**	FGATE error 1: Feedback remains LOW for K write	
		After the start of timing to create the black image, the PFGATE register of the GAVD (ASIC) does not assert, even after 5 sec. when: • Images are created on the drum. • MUSIC patterns are created on the transfer belt. The BICU received a LOW feedback signal, but the signal remained LOW (indicating the lasers were still operating), even after creation of the next image should have started.	• GAVD (ASIC) on the BICU defective • PCI I/F on the IPU defective • ASIC on the IOB defective • Check board connections, replace

SC232	**D**	FGATE error 1: Feedback remains HIGH for Y write	
		After the start of timing to create the yellow image, the PFGATE register of the GAVD (ASIC) does not assert, even after 5 sec. when: • Images are created on the drum. • MUSIC patterns are created on the transfer belt. The BICU received no feedback (LOW signal) from the LD unit to indicate that the lasers started firing at the prescribed time to create the patterns.	• GAVD (ASIC) on the BICU defective • PCI I/F on the IPU defective • ASIC on the IOB defective • Controller board disconnected, defective • Harness between the BICU and LDB unit disconnected, loose, or defective. • Check board connections, replace

Downloaded from www.Manualslib.com manuals search engine

SC233	**D**	FGATE error 1: Feedback remains LOW for Y write	
		After the start of timing to create the yellow image, the PFGATE register of the GAVD (ASIC) does not assert, even after 5 sec. when: • Images are created on the drum. • MUSIC patterns are created on the transfer belt. The BICU received a LOW feedback signal, but the signal remained LOW (indicating the lasers were still operating), even after creation of the next image should have started.	• GAVD (ASIC) on the BICU defective • PCI I/F on the IPU defective • ASIC on the IOB defective • Check board connections, replace

SC234	**D**	FGATE error 1: Feedback remains HIGH for M write	
		After the start of timing to create the magenta image, the PFGATE register of the GAVD (ASIC) does not assert, even after 5 sec. when: • Images are created on the drum. • MUSIC patterns are created on the transfer belt. The BICU received no feedback (LOW signal) from the LD unit to indicate that the lasers started firing at the prescribed time to create the patterns.	• GAVD (ASIC) on the BICU defective • PCI I/F on the IPU defective • ASIC on the IOB defective • Controller board disconnected, defective • Harness between the BICU LDB unit disconnected, loose, or defective. • Check board connections, replace

SC235	**D**	FGATE error 1: Feedback remains LOW for M write	
		After the start of timing to create the magenta image, the PFGATE register of the GAVD (ASIC) does not assert, even after 5 sec. when: • Images are created on the drum. • MUSIC patterns are created on the transfer belt. The BICU received a LOW feedback signal, but the signal remained LOW (indicating the lasers were still operating), even after creation of the next image should have started.	• GAVD (ASIC) on the BICU defective • PCI I/F on the IPU defective • ASIC on the IOB defective • Check board connections, replace

Downloaded from www.Manualslib.com manuals search engine

SC236	**D**	FGATE error 1: Feedback remains HIGH for C write	
		After the start of timing to create the cyan image, the PFGATE register of the GAVD (ASIC) does not assert, even after 5 sec. when: • Images are created on the drum. • MUSIC patterns are created on the transfer belt. The BICU received no feedback (LOW signal) from the LD unit to indicate that the lasers started firing at the prescribed time to create the patterns.	• GAVD (ASIC) on the BICU defective • PCI I/F on the IPU defective • ASIC on the IOB defective • Controller board disconnected, defective • Harness between the BICU and LDB unit disconnected, loose, or defective. • Check board connections, replace

SC237		FGATE error 1: Feedback remains LOW for C write	
		After the start of timing to create the cyan image, the PFGATE register of the GAVD (ASIC) does not assert, even after 5 sec. when: • Images are created on the drum. • MUSIC patterns are created on the transfer belt. The BICU received a LOW feedback signal, but the signal remained LOW (indicating the lasers were still operating), even after creation of the next image should have started.	• GAVD (ASIC) on the BICU defective • PCI I/F on the IPU defective • ASIC on the IOB defective • Check board connections, replace

SC240	**C**	LD error 1: K	
SC241	**C**	LD error 1: Y	
SC242	**C**	LD error 1: M	
SC243	**C**	LD error 1: C	
		An error is asserted at the LD error terminal of the black, yellow, magenta, or cyan LD driver after initialization of the LD because the power to the LD was higher or lower than the prescribed limit.	• LD defective due to wear, damage, short circuit • LDB harness disconnected, loose or defective

Downloaded from www.Manualslib.com manuals search engine

SC268	**C**	Optical unit sensor error	
		At power ON, one of the two temperature sensors in the optics unit detected a temperature lower than 0°C for more than 1 sec. -or- It detected a temperature higher than 100°C for more than 1 sec.	• Thermistor disconnected (causes extremely low temperature reading) • Thermistor damaged and short circuited (causes extremely high temperature reading) • BICU defective

SC269	**C**	Exposure thermistor 2 error	
		At power on, exposure thermistor 2 detected a temperature lower than 0°C for more than 1 sec. -or- It detected a temperature higher than 100°C for more than 1 sec.	• Thermistor disconnected (causes extremely low temperature reading) • Thermistor damaged and short circuited (causes extremely high temperature reading) • BICU defective

SC270	**C**	Mirror motor upper/lower limit: Y (Yellow)	
SC271	**C**	Mirror motor upper/lower limit: M (Magenta)	
SC272	**C**	Mirror motor upper/lower limit: C (Cyan)	
		The pulse rate of the mirror motor reaches the upper or lower limit. **Note:** SP2182 displays the pulse rate for each motor.	• 3rd mirror motor is defective. • 3rd mirror motor connecter is not connected correctly.

SC285	**D**	MUSIC error	
		An error with the MUSIC occurs four times since the last time the main power was turned ON.	• ITB defective • MUSIC sensors are dirty • MUSIC sensors are defective

Downloaded from www.Manualslib.com manuals search engine

SC codes Group 3: Image Development - 1

SC300	**D**	AC charge output error 1: K	
SC301	**D**	AC charge output error 2: M	
SC302	**D**	AC charge output error 3: C	
SC303	**D**	AC charge output error 4: Y	
		An interrupt checks the status of the power pack every 2 ms. This SC is issued if the BICU detects a short in the AC charge for black, magenta, cyan, or yellow (V = 0, for example) for 500 ms (250 times).	• High voltage power supply • BICU defective • OPC unit defective
		1. Disconnect the high voltage cable from Terminal C of the multiple high-voltage supply board. 2. Attach a voltmeter to the terminal. 3. If there is no output from the terminal, replace the high voltage power supply. -or- If there is output from the terminal, test the resistance between the high voltage cable and the ground. If resistance is nearly "0", check the high-voltage harness for defects and replace it if necessary. 4. Test the conductivity between the OPC unit and the ground. If there is no conductivity between the OPC unit and ground, replace the OPC unit. 5. If there is no charge PWM signal, replace the harness and/or BICU.	

SC312	**D**	Charge, development error 1: K	
SC313	**D**	Charge, development error 2: M	
SC314	**D**	Charge, development error 3: C	
SC315	**D**	Charge, development error 4: Y	
		500 ms after the black, magenta, cyan, and yellow drums start to rotate, the machine starts to monitor the AC current feedback at 8 ms intervals. This is SC is issued if the feedback for the charge unit of any color drops below 0.5V for 400 ms (50 consecutive readings).	• Make sure that the settings of **SP2202** are at the defaults. • Defective charge roller • Defective power pack

SC316	**D**	AC bias charge adjustment error 1: K	
SC317	**D**	AC bias charge adjustment error 2: M	
SC318	**D**	AC bias charge adjustment error 3: C	
SC319	**D**	AC bias charge adjustment error 4: Y	
		An average value of 8 ms/cycle could not be attained for Vpp (AC charge bias) within 15 attempts. -or- The output of the AC charge boosted Vpp over 2.8 kV.	• Charge roller dirty • Charge roller defective • Bias terminal connection at the PCU receptacle is dirty or defective

Downloaded from www.Manualslib.com manuals search engine

SC320	**D**	Development power pack error 1: K	
SC321	**D**	Development power pack error 2: M	
SC322	**D**	Development power pack error 3: C	
SC323	**D**	Development power pack error 4: Y	
		An interrupt checks the status of the each power pack every 2 ms. This SC is issued if the BICU detects a short in the development DC charge for black, magenta, cyan, or yellow (or V = 0) for 500 ms (250 times).	• Development power pack defective • High voltage power supply defective • High voltage power supply harness defective • Development unit defective • IOB harness disconnected or defective • IOB defective
		1. Disconnect the high voltage cable from Terminal B of the high-voltage supply board. 2. Attach a voltmeter to the terminal. 3. If there is no output from the terminal, replace the high voltage power supply. -or- If there is output from the terminal, test the resistance between the high voltage cable and the ground. If resistance is "0" or nearly "0", check the high-voltage harness for defects and replace it if necessary. If replacing the harness does not solve the problem, 4. Test the resistance between the development unit terminal and the ground. If there is no resistance (0Ω) between the development unit and the ground, replace the development unit. 5. If there is no development PWM signal, replace the harness and/or IOB.	

SC324	**D**	Development motor error 1: K	
SC325	**D**	Development motor error 2: M	
SC326	**D**	Development motor error 3: C	
SC327	**D**	Development motor error 4: Y	
		The PLL lock signal remained HIGH or LOW for longer than the prescribed time for the development motor of the affected color.	• Development motor shaft locked, blocked by and obstruction • DRB (Drive Board) defective

Downloaded from www.Manualslib.com manuals search engine

SC336	**D**	Developer set error 1: K	
SC337	**D**	Developer set error 2: M	
SC338	**D**	Developer set error 3: C	
SC339	**D**	Developer set error 4: Y	
		The value of Vcnt is set at the maximum or minimum setting when the TD sensor is initialized.	• Film seal not removed from the black, magenta, cyan, or yellow developer case
		Open the front door. Pull out the film seal from the black, magenta, cyan, or yellow developer case. Be sure to do the correct SP for the affected color: • **SP3801 003** to initialize the TD sensor for black. • **SP3801 004** to initialize the TD sensor for magenta. • **SP3801 005** to initialize the TD sensor for cyan. • **SP3801 006** to initialize the TD sensor for yellow.	

SC340	**D**	Toner cartridge set error 1: K	
SC341	**D**	Toner cartridge set error 2: M	
SC342	**D**	Toner cartridge set error 3: C	
SC343	**D**	Toner cartridge set error 4: Y	
		The machine cannot read the ID chip of the black, magenta, cyan, or yellow toner cartridge.	• Black, magenta, cyan, or yellow toner cartridge set incorrectly
		1. Open the front door. 2. Press down the release lever on the top edge of the toner bin to of the affect toner cartridge to release it, then pull the bin out to open it. 3. Remove the toner cartridge and set it again.	

SC348	**D**	Toner hopper motor error	
		2 sec. after the motor START signal is output, a LOCK signal cannot be detected.	• Motor harness disconnected, loose, or defective • Powder pump overload • Sub hopper overload • Toner hopper motor defective

Downloaded from www.Manualslib.com manuals search engine

SC360	**D**	TD sensor (Vt high) error 1: K	
SC361	**D**	TD sensor (Vt high) error 2: M	
SC362	**D**	TD sensor (Vt high) error 3: C	
SC363	**D**	TD sensor (Vt high) error 4: Y	
		The Vt value of the black, magenta, cyan, or yellow TD sensor exceeds 4.5V for two counts.	• Black, magenta, cyan, or yellow TD sensor disconnected • Harness between TD sensor and PCU defective • Defective TD sensor.
		1. Turn the machine OFF and ON. 2. Check the black, magenta, cyan, or yellow TD sensor connector and harness between the TD sensor and PCU for damage. 3. Check the drawer connector. 4. Replace the TD sensor. 5. After replacing the black TD sensor: • Do **SP3801 003-006** to initialize the new black, magenta, cyan, or yellow TD sensor. • Execute **SP3820 001** to do auto process control manually.	

SC364	**D**	TD sensor (Vt low) error 1: K	
SC365	**D**	TD sensor (Vt low) error 2: M	
SC366	**D**	TD sensor (Vt low) error 3: C	
SC367	**D**	TD sensor (Vt low) error 4: Y	
		The Vt value of the black, magenta, cyan, or yellow TD sensor is below 0.5V for 10 counts.	• TD sensor harness disconnected, loose, defective • A drawer connector (located on the rear of a development unit) disconnected, loose, defective • TD sensor defective
		1. Turn the machine OFF and ON. 2. Check the TD sensor connector and harness between the TD sensor and PCU for damage. Replace it if necessary. 3. Check the drawer connector. 4. Replace the TD sensor. 5. After replacing the TD sensor: • Do **SP3801 003-006** to initialize the new black, magenta, cyan, or yellow TD sensor. • Execute **SP3820 001** to do auto process control manually.	

Downloaded from www.Manualslib.com manuals search engine

SC372	**D**	TD sensor adjustment error 1: K	
SC373	**D**	TD sensor adjustment error 2: M	
SC374	**D**	TD sensor adjustment error 3: C	
SC375	**D**	TD sensor adjustment error 4: Y	
		During TD sensor initialization with **SP3801**, the output value of the black, magenta, cyan, or yellow TD sensor is not within the range of 3.2±0.2V	• Film seal not removed from a new developer pack • TD harness sensor disconnected, loose or defective • TD sensor defective • Harness between TD sensor and drawer disconnected, defective
		1. Turn the machine OFF and ON. 2. Pull ouut the film seal from the black, magenta, cyan, or yellow PCU. 3. Do **SP3812 001** to confirm that the developer was initialized correctly. The display should show "1111" if developer initialized correctly. 4. Check the TD sensor connector. 5. Check the TD sensor connector and harness between the TD sensor and PCU for damage. Replace it if necessary. 6. Check the drawer PCU connector. 7. Replace the TD sensor. 8. After replacing the TD sensor: • Do **SP3801 003-006** to initialize the new black, magenta, cyan, or yellow TD sensor. • Execute **SP3820 001** to do auto process control manually.	

SC396	**D**	Drum motor error 1: K	
SC397	**D**	Drum motor error 2: M	
SC398	**D**	Drum motor error 3: C	
SC399	**D**	Drum motor error 4: Y	
		When the drum motor of the black, magenta, cyan, or yellow PCU starts, the machine cannot detect a LOCK signal within 2 sec. The motor is trying to rotate but there is an excessive load on the drum shaft. The motor has no traction (due to a bent cleaning blade, for example).	• PCU drum dirty • PCU defective • Motor harness defective • DRB (Drive board) defective • Drum motor defective • Insufficient lubrication on a drum. Open PCU and apply toner to the drum surface

Downloaded from www.Manualslib.com manuals search engine

SC codes Group 4: Image Development - 2

SC400	**D**	ID sensor error 1: Calibration	
		Before adjustment Vsg_reg<0.5 but Vsg_reg could not be adjusted to the target Vsg_reg = 4.0±0.2V during process control.	• ID sensor harness disconnected, loose, defective • ID sensor dirty • ID sensor defective • ITB unit drawer connector dirty
		Note: Vsg_reg is the voltage reading of the light reflected directly from the bare surface of the ITB. The color ID sensor is provided with one additional receptor to read diffuse light reflected from the colors of ID sensor patterns. The additional receptor on the color sensor is not used to read the bare surface of the belt. For more, see Section "6. Details".	

SC410	**D**	ID sensor error 2: Development γ K	
SC411	**D**	ID sensor error 3: Development γ M	
SC412	**D**	ID sensor error 4: Development γ C	
SC413	**D**	ID sensor error 5: Development γ Y	
		Development gamma for black, magenta, cyan, or yellow is not within range (0.3 to 6.0). Process control halts when this SC is issued.	• Toner density not normal: Refer to the procedure for process control self-check error codes 55 to 59 to 59, and 61 (section 4.2.4) • Potential sensor defective • Laser diode not firing • ITB separation for CMY abnormal • Transfer power pack defective • ID sensor defective

SC414	**D**	ID sensor error 6: Development start voltage K	
SC415	**D**	ID sensor error 7: Development start voltage M	
SC416	**D**	ID sensor error 8: Development start voltage C	
SC417	**D**	ID sensor error 9: Development start voltage Y	
		The development start voltage in the development of the black, magenta, cyan, or yellow PCU is not within the correct range (±150V)	• Toner density not normal: Refer to the procedure for process control self-check error codes 55 to 59, and 61 (section 4.2.4) • Potential sensor defective • LD not firing correctly • ITB separation for CMY abnormal • Transfer power pack defective • ID sensor defective

SC418	**C**	LED error during Vsg adjustment	
		PWM value: Ifsg>2000 This means the current to the LED of the ID sensor is abnormal.	• ID sensor dirty • ID sensor defective

Downloaded from www.Manualslib.com manuals search engine

SC420	**C**	Potential sensor error 1: Vd Adjustment K	
SC421	**C**	Potential sensor error 2: Vd Adjustment M	
SC422	**C**	Potential sensor error 3: Vd Adjustment C	
SC423	**C**	Potential sensor error 4: Vd Adjustment Y	
		The development potential of the drum before exposure (Vd) cannot be adjusted to within ±10 V of the target voltage (-900V).	• Toner density low

SC424	**C**	Potential sensor error 5: Vl adjustment K	
SC425	**C**	Potential sensor error 6: Vl adjustment M	
SC426	**C**	Potential sensor error 7: Vl adjustment C	
SC427	**C**	Potential sensor error 8: Vl adjustment Y	
		Vpl could not be adjusted to within ±10V of the target Vpl after exposure of the ID sensor patterns.	• Toner density low

SC432	**C**	Potential sensor error 1: Vr K	
SC433	**C**	Potential sensor error 2: Vr M	
SC434	**C**	Potential sensor error 3: Vr C	
SC435	**C**	Potential sensor error 4: Vr Y	
		Vr > 200V The residual voltage (Vr), the amount of voltage that remains on the surface of the drum after the Quenching Lamp fires is greater than 200V.	• Toner density low

SC436	**D**	Potential sensor error 5: Vd K	
SC437	**D**	Potential sensor error 6: Vd M	
SC438	**D**	Potential sensor error 7: Vd C	
SC439	**D**	Potential sensor error 8: Vd Y	
		The VdHome reading, the first step of the process control self-check, detected that the development potential of the unexposed areas of the drum are not within the prescribed range (-500 to -700)	• Potential sensor dirty • Potential sensor defective • Charge roller defective • Charge power pack defective • OPC defective

Downloaded from www.Manualslib.com manuals search engine

SC440	**D**	Image transfer power pack error 1: K	
SC441	**D**	Image transfer power pack error 2: M	
SC442	**D**	Image transfer power pack error 3: C	
SC443	**D**	Image transfer power pack error 4: Y	
		An interrupt checks the status of the power pack every 2 ms. This SCis issued if the BICU detects a short in the power pack for K, M, C, or Y 250 times within 500 ms.	• Transfer belt damaged, insulation damaged • Insulation on high voltage cable damaged • Another hot point inside the machine has damaged insulation • Insulation around high-voltage power supply damaged • IOB damaged

SC445	**D**	Image transfer motor error	
		The control board of the image transfer motor generated signals that indicate there is problem with the image transfer motor.	• Image transfer motor defective • ITB control board defective • ITB overloaded • Encoder strip on the front edge of the belt damaged.

SC446	**D**	ITB lift motor error	
		The state of the ITB lift sensor does not change its state (switching from OFF to ON or vice versa), even after the ITB lift motor starts rotating.	• ITB lift sensor dirty, disconnected, defective • ITB lift motor disconnected, defective

SC450	**D**	Transfer power pack output error	
		An interrupt checks the status of the power pack every 2 ms. This SC is issued if the BICU detects a short in the power pack 250 times at 2nd transfer output within 500 ms.	• Damaged insulation on the high-voltage supply cable • Damaged insulation around the high-voltage power supply.

SC455	**D**	PTR motor error	
		The lock signal from the paper transfer motor is not detected within 1 sec. after the motor switched ON.	• Motor disconnected • PTR shaft locked, needs cleaning, blocked by obstruction • Drive shaft of the ITB locked and overloaded, needs cleaning, or blocked by obstruction • DRB (motor drive board) disconnected, defective

Downloaded from www.Manualslib.com manuals search engine

SC460	**D**	Separation power pack output error	
		An interrupt checks the status of the power pack every 2 ms. This SC is issued if the BICU detects a short in the power pack 250 times at D(AC) within 500 ms.	• Damaged insulation on the high-voltage supply cable • Damaged insulation around the high-voltage power supply.
		1. Replace the high-voltage supply cable. 2. Replace the high-voltage power supply unit. 3. Replace the IOB.	

SC484	**D**	Waste toner bottle full	
		The toner full sensor goes HIGH for more than 500 ms, indicating that the waste toner bottle is full.	• Remove waste toner bottle, empty it

SC485	**D**	Waste toner transport motor error	
		The lock signal of the waste toner transport motor remains HIGH for more than 600 ms.	• Waste toner transport motor defective

SC487	**D**	Waste toner bottle set error	
		The set sensor of the waste toner bottle remains LOW for more than 500 ms. (The sensor goes HIGH when the bottle is installed correctly.)	• Install the waste toner bottle • Remove waste toner bottle and reinstall correctly

SC488	**D**	Waste toner transport lock	
		Waste toner cannot be transported to the waste toner bottle.	• Blockage in the line to the waste toner bottle

SC490	**C**	Peltier Unit error	
		The Abnormal Condition signal or the Peltier Unit is received 10 times.	• Peltier Unit is defective

Downloaded from www.Manualslib.com manuals search engine

SC496	**C**	MUSIC sensor error	
		The MUSIC sensor detected an abnormal pattern on the ITB because: • A/D converter exceeded upper or lower limit. • The pattern used to calculate the amount of skew is abnormal. • The reading of the pattern exceeded the length of time the LED projected light. • LED light could not be adjusted correctly.	• MUSIC sensor defective or disconnected • MUSIC pattern abnormal; do a forced process control (SP3821) and check the result (section 4.2.4).

SC497	**C**	Temperature and humidity sensor error 1: PCU	
		The thermistor output of the temperature and humidity sensor above the black PCU was not within the prescribed range (0.5V to 4.2V)	• Temperature and humidity sensor harness disconnected, loose, defective • Temperature and humidity sensor defective

SC498	**C**	Temperature and humidity sensor error 2	
		The thermistor output of the temperature and humidity sensor at below the waste toner bottle was not within the prescribed range (0.5V to 4.2V)	• Temperature and humidity sensor harness disconnected, loose, defective • Temperature and humidity sensor defective

SC499	**C**	ITB Position Sensor error	
		Abnormal ITB Position Sensor output.	• ITB Position Sensor 1 or 2 is dirty. • ITB Position Sensor 1 or 2 is defective. • ITB encoder strip is dirty, • ITB encoder strip is damaged. • ITB movement error (e.g. the belt cannot rotate correctly due to friction). 1. Connectors for ITB Position Sensor 1 or 2 are not connected correctly.

Downloaded from www.Manualslib.com manuals search engine

SC codes Group 5: Paper Feed

SC501	**B**	Tray 1 (tandem tray) feed error (**Japan Only**)	
		• The tray 1 lift sensor does not switch ON 10 s after the tray lift motor switches ON and starts lifting the bottom plate. • When the tray lowers, the tray lift sensor does not go off within 1.5 sec. • The lower limit sensor of the tandem tray does not detect the lower limit within 10 sec.	• Tray lift motor harness disconnected, loose, defective • Paper or other obstacle trapped between tray and motor • Tray lift sensor disconnected, damaged • Lower limit sensor disconnected, damaged • Pick-up solenoid disconnected, blocked by an obstacle

SC502	**B**	Tray 2 (paper cassette) feed error (**Japan Only**)	
		• The lift sensor is not activated within 10 seconds after the tray lift motor starts lifting the bottom plate. • When the tray lowers, the tray lift sensor does not go off within 1.5 sec. • The lower limit sensor of the tandem tray does not detect the lower limit within 10 sec.	• Tray lift motor defective or disconnected • Paper or other obstacle trapped between tray and motor • Pick-up solenoid disconnected or blocked by an obstacle

SC503	**B**	Tray 1 feed error	
		• The lift sensor is not activated within 10 seconds after the tray lift motor starts lifting the bottom plate. • When the tray lowers, the tray lift sensor does not go off within 1.5 sec.	• Tray lift motor defective or disconnected • Paper or other obstacle trapped between tray and motor • Pick-up solenoid disconnected or blocked by an obstacle

SC504	**B**	Tray 2 feed error	
		• The lift sensor is not activated within 10 seconds after the tray lift motor starts lifting the bottom plate. • When the tray lowers, the tray lift sensor does not go off within 1.5 sec.	• Tray lift motor defective or disconnected • Paper or other obstacle trapped between tray and motor • Pick-up solenoid disconnected or blocked by an obstacle

Downloaded from www.Manualslib.com manuals search engine

SC505	**C**	Tandem tray rear fence motor error	
		• The return sensor does not switch ON within 10 sec. after the rear fence motor switches ON. • The HP sensor does not switch ON 10 sec. after the rear fence motor switches ON. • The HP sensor and return sensor switch ON at the same time.	• Rear fence motor defective or poor connection • Paper or other obstacle interfering with operation of the sensors • Paper or other obstacle trapped between tray and motor • Motor mechanical overload due to obstruction • Return sensor or HP sensor defective or dirty

SC506	**B**	Tandem tray back fence motor error	
		The back fence should be closed but the fence was not detected in the closed position within 500 ms. -or- The back fence should be open but the fence was not detected in the open within 500 ms.	• Paper loaded incorrectly • Back fence motor harness disconnected, loose, defective • Back fence motor defective • Paper blocking sensors • Paper stuck between tray and motor • Back fence close, back fence open sensor harnesses disconnected, loose, or defective. • Back fence close, back fence open sensor defective • Paper or other obstacle is interfering with movement of the fence

SC510	**B**	LCT tray error	
		• When the bottom plate is lifted, the upper limit sensor does not come on for 30 sec. • When the bottom plate is lowered, the lower limit sensor does not come on for 30 sec. • After lift begins, the upper limit sensor does not switch ON before the pick-up solenoid switches ON. • The paper end sensor switches ON during lift and the upper limit sensor does not switch ON for 2.5 s, and a message prompts user to reset paper.	• Tray lift motor harness, disconnected, loose, or defective • Tray lift motor defective • Lift sensor defective or disconnected • Pick-up solenoid defective or disconnected • Paper end sensor defective

Downloaded from www.Manualslib.com manuals search engine

SC515	**C**	Duplex jogger motor error 1	
		When the jogger fence moves to the home position, the jogger fence HP sensor does not switch on even after the duplex jogger motor has moved the jogger fence 153.5 mm.	• Rear fence motor defective or poor connection • Paper or other obstacle interfering with operation of the sensors or motor • Return sensor or HP sensor defective or dirty

SC516	**B**	Duplex jogger motor error 2	
		When the jogger fence moves from the home position, the jogger fence HP sensor does not turn off even if the duplex jogger motor has moved the jogger fence 153.5 mm.	• Paper or other obstacle has jammed mechanism • HP sensor connector disconnected or defective • HP sensor defective

SC520	**A**	Fusing/Exit Motor error	
		The Fusing/Exit Motor LOCK signal is not detected for a duration of one second after the motor START signal is sent.	• Fusing/Exit Motor connecter is not connected correctly. • Fusing/Exit Motor torque is too high or too low. • Fusing/Exit Motor is defective.

SC530	**D**	Fan error 1: fusing cooling fan motor	
		The BICU does not receive the lock signal 5 seconds after the fusing unit fan switches ON.	• Fusing cooling fan disconnected, defective • BICU defective

SC531	**D**	Fan error 2: fusing cooling fan motor	
		The lock signal remained HIGH for 5 sec. while the fan at the front of the fusing unit near the heat dissipation fins was operating.	• Motor overload due to obstacle interfering with operation of the fan • Fan harness loose, disconnected, defective • Fan defective

SC532	**D**	Fan error 3: PCB box fan	
		The lock signal remained HIGH for 5 sec. while the fan that cools the printed circuit boards was operating.	• Motor overload due to obstacle interfering with operation of the fan • Fan harness loose, disconnected, defective • Fan defective

Downloaded from www.Manualslib.com manuals search engine

SC533	**D**	Fan error 4: fusing exhaust fan	
		The lock signal remained HIGH for 5 sec. while the fan that draws air out of the fusing unit was operating.	• Motor overload due to obstacle interfering with operation of the fan • Fan harness loose, disconnected, defective • Fan defective

SC534	**D**	Fan error 5: duplex exhaust fan	
		The lock signal remained HIGH for 5 sec. while the fan that draws air out of the duplex unit was operating.	• Motor overload due to obstacle interfering with operation of the fan • Fan harness loose, disconnected, defective • Fan defective

SC535	**C**	Temperature/Humidity control abnormal	
		The output of the temperature/humidity sensor reaches the upper or lower limit, even after the Peltier unit has been ON for 3 hours.	• Peltier Cooling Fan Motor is defective.

SC541	**A**	Heating roller thermistor 1 error 1: Poor connection	
		The temperature measured by the heating roller thermistor does not reach 130°C after 10 tries and 65 sec. have elapsed.	• Heating roller thermistor harness connection loose, disconnected, defective • Defective heating roller thermistor

SC542	**A**	Heating roller thermistor 1 error 2: No warmup	
		After the main switch is turned ON or the cover is closed, the heating roller temperature does not reach the ready temperature within 2 sec. after the heater switches ON. -or- If the roller was below 45°C, the heating roller did not reach the ready temperature 2 sec. after reaching 45°C. **Note**: Thermistor 2 stops monitoring the temperature once Thermistor 1 detects ready temperature.	• Thermistor is bent, installed incorrectly • Defective heating roller thermistor • Heating roller fusing lamp broken
		Do **SP5810** to cancel the SC fusing code.	

Downloaded from www.Manualslib.com manuals search engine

SC543	**A**	Heating roller thermistor 1 error 3: Software - High temperature	
		The thermistor detected a temperature over 230°C.	• TRIAC short • IOB defective • BICU defective • Fusing temperature out of control
		Do **SP5810** to cancel the SC fusing code.	

SC544	**A**	Heating roller thermistor 1 error 4: Hardware - High temperature	
		The thermistor detected a temperature over 260°C.	• TRIAC short • IOB defective • BICU defective • Fusing temperature control is erratic
		Do **SP5810** to cancel the SC fusing code.	

SC545	**A**	Heating roller thermistor 1 error 5: Lamp remains ON	
		After hot roller reaches warmup temperature, the fusing lamps remained ON at full capacity for 25 sec. after reaching the warmup temperature while the hot roller was not rotating.	• Thermistor damaged, or out of position • Fusing lamp disconnected, broken
		Do **SP5810** to cancel the SC fusing code.	

SC546	**A**	Heating roller thermistor 2 error 1: Thermistor disconnected	
		The temperature measured by the heating roller thermistor does not reach 0°C after 45 sec. and remains over this temperature for 10 readings.	• Loose connection of the heating roller thermistor • Defective heating roller thermistor

SC547	**A**	Zero cross error	
		When the main switch is turned ON, the machine checks how many zero-cross signals are generated within 500 ms. This SC code is issued if the number of zero-cross signals detected is either more than 66 or less than 45 for 10 readings. **Note**: Zero cross signals, generated from an ac power supply, are used to generate a trigger pulses to control the applied power accurately.	• Electrical noise on the power supply line • Fusing relay damaged: replace the PSU.
		Normally, this SC is cancelled if you do **SP5810** to cancel the SC fusing code.	

Downloaded from www.Manualslib.com manuals search engine

SC548	**A**	Heating roller thermistor 2 error 2: Failed to reach warmup temperature	
		After the main switch is turned ON or the cover is closed, the heating roller temperature does not reach the ready temperature within 2 sec. after the heater switches ON. -or- If the roller was below 45°C, the heating roller did not reach the ready temperature 2 sec. after reaching 45°C. **Note**: Thermistor 2 stops monitoring the temperature once Thermistor 1 detects warmup temperature.	• Thermistor is bent, installed incorrectly • Defective heating roller thermistor • Heating roller fusing lamp broken • Defective BICU
		Do **SP5810** to cancel the SC fusing code.	

SC549	**A**	Heating roller thermistor 2 error 3: Software - High Temperature	
		The thermistor detected a temperature over 250°C.	• TRIAC short • IOB defective • BICU defective • Fusing temperature control is erratic
		Do **SP5810** to cancel the SC fusing code.	

SC550	**A**	Heating roller thermistor 2 error 4: Hardware - High Temperature	
		The thermistor detected a temperature over 260°C.	• TRIAC short • IOB defective • BICU defective • Fusing temperature control is erratic
		Do **SP5810** to cancel the SC fusing code.	

SC551	**A**	Pressure roller thermistor error 1	
		The temperature measured by the pressure roller thermistor does not reach 0°C for 200 sec.	• Loose connection of the pressure roller thermistor • Defective pressure roller thermistor • Defective BICU
		Do **SP5810** to cancel the SC fusing code.	

SC552	**A**	Pressure roller thermistor error 2	
		After the main switch is turned ON or the cover is closed, the heating roller temperature does not reach the ready temperature within 2 sec. after the heater switches ON. -or- If the roller was below 45°C, the heating roller did not reach the ready temperature 2 sec. after reaching 45°C. **Note**: Thermistor 2 stops monitoring the temperature once Thermistor 1 detects ready temperature.	• Pressure roller thermistor harness loose, disconnected, defective • Pressure roller thermistor defective

Downloaded from www.Manualslib.com manuals search engine

SC553	**A**	Pressure roller thermistor error 3: Software - High temperature	
		The thermistor detected a temperature over 220°C.	• TRIAC short • IOB defective • BICU defective • Fusing temperature control is erratic
		Do **SP5810** to cancel the SC fusing code.	

SC554	**A**	Pressure roller thermistor error 4: Hardware - High temperature	
		The thermistor detected a temperature over 230°C.	• TRIAC short • IOB defective • BICU defective • Fusing temperature control is erratic
		Do **SP5810** to cancel the SC fusing code.	

SC555	**A**	Pressure roller thermistor error 5: Lamp remains ON	
		After hot roller reaches warmup temperature, the pressure roller fusing lamp remains for 6 sec. while the hot roller is not rotating.	• Thermistor damaged, or out of position • Fusing lamp disconnected, broken
		Do **SP5810** to cancel the SC fusing code.	

SC556	**A**	Heating roller thermistor 2 error 5: Lamp remains ON	
		After hot roller reaches warmup temperature, the pressure roller fusing lamp remains for 6 sec. while the hot roller is not rotating.	• Thermistor damaged, or out of position • Fusing lamp disconnected, broken

SC561	**A**	Hot roller thermistor error 1: Thermistor disconnected	
		The temperature measured by the hot roller thermistor does not reach the prescribed warm-up temperature within 100 sec.	• Loose connection of the hot roller thermistor • Defective hot roller thermistor • Defective BICU

SC562	**A**	Hot roller thermistor error 2: Failure to reach warmup temperature	
		After the main switch is turned ON or the cover is closed, the heating roller temperature does not reach the ready temperature within 2 sec. after the heater switches ON. -or- If the roller was below 45°C, the heating roller did not reach the ready temperature 2 sec. after reaching 45°C. **Note**: Thermistor 2 stops monitoring the temperature once Thermistor 1 detects ready temperature.	• Hot roller fusing lamp broken • Defective hot roller thermistor • Defective BICU
		Do **SP5810** to cancel the SC fusing code.	

Downloaded from www.Manualslib.com manuals search engine

SC563	**A**	Hot roller thermistor error 3: Software - High Temperature	
		The thermistor detected a temperature over 250°C 10 times within 1 sec.	• TRIAC short • IOB defective • BICU defective • Fusing temperature control is erratic
		Do **SP5810** to cancel the SC fusing code.	

SC564	**A**	Hot roller thermistor error 4: Hardware - High Temperature	
		The thermistor detected a temperature over 260°C.	• TRIAC short • IOB defective • BICU defective • Fusing temperature control is erratic
		Do **SP5810** to cancel the SC fusing code.	

SC565	**A**	Hot roller thermistor error 5: Lamp remains ON	
		After hot roller reaches warmup temperature, the hot roller fusing lamp remains for 6300 sec. while the hot roller is not rotating.	• Thermistor damaged, or out of position • Fusing lamp disconnected, broken
		Do **SP5810** to cancel the SC fusing code.	

SC585	**C**	Double-feed sensor error	
		The output of the double-feed sensor reaches the upper or lower limit	• Double-feed sensor connector is not connected correctly. • Double-feed sensor is dirty with paper dust. • There is paper or foreign material between the receptor and LED of the double-feed sensor.

Downloaded from www.Manualslib.com manuals search engine

SC codes Group 6: Device Communication

SC620	**D**	ARDF communication error	
		A BREAK signal occurs after the machine detects the ARDF, or a communication timeout occurs.	• ARDF disconnected • IPU board harness disconnected, defective • IPU board defective • Spurious noise from the power supply line • ARDF control board defective

SC621	**D**	Mailbox-to-Finisher communication error	
		Communication between the mailbox and finisher is interrupted. An ACK/NCK signal was not received within 100 ms after a data frame is sent and 3 retries failed.	• Connection cable between mailbox and finisher disconnected, defective • Finisher main board defective • BICU defective • PSU defective

SC622	**D**	LCT communication error	
		Communication between the copier and LCT is interrupted. An ACK/NCK signal was not received within 100 ms after a data frame is sent and 3 retries failed.	• Connection cable between the LCT and copier is disconnected, defective • LCT main board defective • BICU defective • PSU defective

SC624	**D**	Mailbox-to-copier communication error	
		Communication between the mailbox and copier is interrupted. An ACK/NCK signal was not received within 100 ms after a data frame is sent and 3 retries failed.	• Mailbox cable disconnected, defective • Mailbox main board defective • BICU defective • PSU defective

Downloaded from www.Manualslib.com manuals search engine

SC630	**C**	RSS communication error **(Not use)**	
		An error was detected in communication via RSS between the machine and the RSS center. Error occurred on a public line at the RSS terminal.	• No action required

SC632	**B**	Key/card counter device error 1 **(Not use)**	
		After 1 data frame is sent to the device, an ACK signal is not received within 100 ms, and is not received after 3 retries.	• The serial line from the device to the copier is unstable, disconnected, or defective.

SC633	**B**	Key/card counter device error 2 **(Not use)**	
		During communication with the device, the BICU received a break (Low) signal.	• The serial line from the device to the copier is unstable, disconnected, or defective.

SC634	**B**	Key/card counter device error 3 **(Not use)**	
		After installation of the device, a message alerts user to a backup RAM error.	• Device control board defective • Device control board backup battery defective

SC635	**B**	Key/card counter device error 4 **(Not use)**	
		After installation of the device a message alerts user to a battery voltage abnormal error.	• Device control board defective • Device control board backup battery defective

SC670	**D**	Engine startup error	
		• Engine does not respond within 30 s after power ON. • Engine down detected suddenly during power ON and warmup.	• BICU installation incorrect • BICU defective • Sudden communication reset occurred between the BICU and the controller.

SC672	**D**	GW controller startup error	
		• After power ON, the line between the GW controller and the operation panel did not open for normal operation. • After normal startup, communication with the GW controller stopped.	• GW Controller stalled • GW Controller installed incorrectly • GW Controller board defective • Operation panel harness disconnected or defective

Downloaded from www.Manualslib.com manuals search engine

SC680	**D**	BICU-MUSIC communication error	
		The main CPU fails to communicate with the MUSIC CPU within 5 sec. and three attempts failed.	• UART communication failure; replace the BICU

SC687	**D**	Memory address command error	
		The BICU does not receive a memory address command from the controller 120 seconds after paper is in the position for registration.	• BICU-Controller connection loose, defective • BICU defective • Controller defective

Downloaded from www.Manualslib.com manuals search engine

SC codes Group 7: Peripherals

SC701	**D**	Original pick-up operation error	
		Even though the pick-up motor is rotating clock-wise, the pick-up roller home position sensor cannot detect the position of the pick-up roller.	• Pick-up roller HP sensor harness loose, disconnected, defective • Pick-up roller HP sensor defective • Pick-up motor harness loose, disconnected, defective • Pick-up motor defective • ARDF control board defective

SC705	**D**	ARDF bottom plate lift motor	
		• The bottom plate HP sensor did not detect the home position of the bottom plate after the bottom plate lift motor switches ON and lowers the bottom plate. • The bottom plate position sensor does not detect the position of the plate after the lift motor switches ON and raises the bottom plate.	• ARDF feed motor disconnected, defective • Bottom plate HP sensor disconnected, defective • ARDF main board defective

SC720	**D**	Finisher lower transport motor error	
		No encoder pulse signal is detected for the transport motor within the prescribed time. The 1st failure issues an original jam message, and the 2nd failure issues this SC code.	• Lower transport motor disconnected, defective • Finisher connection to transport motor loose, defective • Lower transport motor defective • Finisher main board defective

SC721	**B**	Finisher jogger motor error	
		The jogger fences move out of the home position but the HP sensor output does not change within the specified number of pulses. The 1st failure issues an original jam message, and the 2nd failure issues this SC code.	• Jogger HP sensor disconnected, defective • Jogger motor disconnected, defective • Jogger motor overloaded due to obstruction • Finisher main board and jogger motor connection loose, defective • Finisher main board defective

Downloaded from www.Manualslib.com manuals search engine

SC723	**B**	Finisher feed-out motor	
		The stack feed-out belt HP sensor does not activate within the specified time after the stack feed-out belt motor turns ON. The 1st detection failure issues a jam error, and the 2nd failure issues this SC code.	• Stack feed-out HP sensor disconnected, defective • Feed-out motor disconnected, defective • Finisher main board connection to feed out motor disconnected, defective • Motor overload due to obstruction

SC724	**D**	Finisher stapler hammer motor error	
		Stapling does not finish within the prescribed time after the staple hammer motor turns ON. The 1st detection failure issues a jam error, and the 2nd failure issues this SC code.	• Stapler hammer motor overloaded due to obstruction, jammed staple, number of sheets exceeds limit for stapling • Stapler hammer motor disconnected, defective • Staple hammer motor HP sensor disconnected, defective

SC725	**D**	Finisher exit guide plate motor error	
		After moving away from the guide plate position sensor, the exit guide is not detected at the home position within the prescribed time. The 1st detection failure issues a jam error, and the 2nd failure issues this SC code.	• Guide plate motor disconnected, defective • Guide plate motor overloaded due to obstruction • Guide plate position sensor disconnected, defective

SC726	**B**	Shift jogger motor 1 error	
		The sides fences do not retract within the prescribed time after the shift jogger motor switches ON. The 1st detection failure issues a jam error, and the 2nd failure issues this SC code.	• Shift jogger motor disconnected, defective • Shift jogger motor overloaded due to obstruction • Shift jogger HP sensor disconnected, defective

SC727	**B**	Shift jogger motor 2 error	
		The side fences do not retract within the prescribed time after the shift jogger motor switches ON. The 1st detection failure issues a jam error, and the 2nd failure issues this SC code.	• Motor harness disconnected, loose, defective • Motor defective • Motor overload • HP defective

Downloaded from www.Manualslib.com manuals search engine

SC728	**B**	Shift jogger retraction motor error	
		The side fences do not retract within the prescribed time after the retraction motor switches ON. The 1st detection failure issues a jam error, and the 2nd failure issues this SC code.	• Motor harness disconnected, loose, defective • Motor defective • Motor overload • HP defective

SC730	**B**	Finisher Tray 1 shift motor error	
		The shift roller HP sensor of the upper tray does not activate within the prescribed time after the shift tray starts to move toward or away from the home position. The 1st detection failure issues a jam error, and the 2nd failure issues this SC code.	• Shift tray HP sensor of the upper tray disconnected, defective • Shift tray motor of the upper tray is disconnected, defective • Shift tray motor of the upper tray overloaded due to obstruction

SC740	**B**	Finisher corner stapler motor error	
		The stapler motor does not switch off within the prescribed time after operating. The 1st detection failure issues a jam error, and the 2nd failure issues this SC code.	• Staple jam • Number of sheets in the stack exceeds the limit for stapling • Stapler motor disconnected, defective

SC741	**B**	Finisher corner stapler rotation motor error	
		The stapler does not return to its home position within the specified time after stapling. The 1st detection failure issues a jam error, and the 2nd failure issues this SC code.	• Stapler rotation motor disconnected, defective • Stapler rotation motor overloaded due to obstruction • Stapler rotation HP sensor disconnected, defective

SC742	**B**	Finisher stapler movement motor error	
		The stapler HP sensor is not activated within the specified time after the stapler motor turned ON. The 1st detection failure issues a jam error, and the 2nd failure issues this SC code.	• Stapler movement motor disconnected, defective • Stapler movement motor overloaded due to obstruction • Stapler HP sensor disconnected, defective

Downloaded from www.Manualslib.com manuals search engine

SC743	**B**	Booklet stapler motor error 1	
		The front stapler unit saddle-stitch motor does not start operation within the specified time. The 1st detection failure issues a jam error, and the 2nd failure issues this SC code.	• Front motor disconnected, defective • Front motor overloaded due to obstruction

SC744	**B**	Booklet stapler motor error 2	
		The rear stapler unit saddle-stitch motor does not start operation within the specified time. The 1st detection failure issues a jam error, and the 2nd failure issues this SC code.	• Rear motor disconnected, defective • Rear motor overloaded due to obstruction

SC750	**B**	Finisher tray 1 (upper tray lift) motor error	
		The upper tray paper height sensor does not change its status with the specified time after the tray raises or lowers. The 1st detection failure issues a jam error, and the 2nd failure issues this SC code.	• Tray lift motor disconnected, defective • Upper tray paper height sensor disconnected, defective • Finisher main board connection to motor loose • Finisher main board defective

SC751	**B**	Finisher tray 2 (lower tray lift) motor error	
		The lower tray paper height sensor does not change its status with the specified time after the tray raises or lowers. The 1st detection failure issues a jam error, and the 2nd failure issues this SC code.	• Tray lift motor disconnected, defective • Upper tray paper height sensor disconnected, defective • Finisher main board connection to motor loose • Finisher main board defective

SC752	**B**	Finisher pressure plate motor error	
		Pressure plate motor operating but the plate is not detected at the home position within the specified time. The 1st detection failure issues a jam error, and the 2nd failure issues this SC code.	• Pressure plate HP sensor disconnected, defective • Pressure plate motor disconnected, defective • Pressure plate motor overloaded due to obstruction

Downloaded from www.Manualslib.com manuals search engine

SC753	**B**	Return roller motor error	
		Occurs during the operation of the lower tray pressure motor.	• Motor harness disconnected, loose, defective • Motor overloaded • Home position sensor harness disconnected, loose, defective • Home position defective

SC760	**D**	Finisher punch motor error	
		The punch HP sensor is not activated within the specified time after the punch motor turned ON. The 1st detection failure issues a jam error, and the 2nd failure issues this SC code.	• Punch HP sensor disconnected, defective • Punch motor disconnected, defective • Punch motor overload due to obstruction

SC761	**B**	Finisher folder plate motor error	
		The folder plate moves but is not detected at the home position within the specified time. The 1st detection failure issues a jam error, and the 2nd failure issues this SC code.	• Folder plate HP sensor disconnected, defective • Folder plate motor disconnected, defective • Folder plate motor overloaded due to obstruction.

SC762	**B**	Finisher pressure plate motor error	
		Pressure plate motor operating but the plate is not detected at the home position within the specified time. The 1st detection failure issues a jam error, and the 2nd failure issues this SC code.	• Pressure plate HP sensor disconnected, defective • Pressure plate motor disconnected, defective • Pressure plate motor overloaded due to obstruction

SC763	**D**	Punch movement motor error	
		Occurs during operation of the punch unit. The 1st detection failure issues a jam error, and the 2nd failure issues this SC code.	• Motor harness disconnected, loose, defective • Motor defective

SC764	**D**	Paper position sensor slide motor error	
		Occurs during operation of the punch unit. The 1st detection failure issues a jam error, and the 2nd failure issues this SC code.	• Motor harness disconnected, loose, defective • Motor defective

Downloaded from www.Manualslib.com manuals search engine

SC765	**B**	Folding unit bottom fence lift motor	
		The 1st detection failure issues a jam error, and the 2nd failure issues this SC code.	• Motor harness disconnected, loose, defective • Motor defective

SC766	**B**	Clamp roller retraction motor error	
		The 1st detection failure issues a jam error, and the 2nd failure issues this SC code.	• Motor harness disconnected, loose, defective • Motor defective

SC767	**B**	Stack junction gate motor error	
		Occurs during operation of the punch unit. The 1st detection failure issues a jam error, and the 2nd failure issues this SC code.	• Motor harness disconnected, loose, defective • Motor overload • Motor defective

SC770	**B**	Cover interposer tray bottom plate motor error	
		• After the motor starts to raise the bottom plate, the bottom plate position sensor does not detect the plate at the specified time (3 s). • After the motor starts to lower the bottom plate, the bottom plate HP sensor does not detect the bottom plate.	• Bottom plate position sensor, disconnected, defective • Bottom plate HP sensor disconnected, defective

SC775	**D**	Cover interposer tray feed motor	
			• Motor harness disconnected, loose, defective • Motor overload • Motor defective

SC780	**B**	Z-Fold feed motor error **Japan Only**	
		The feed motor does not attain the prescribed speed within the specified time.	• Feed motor disconnected, defective • Feed motor overloaded due to obstruction • Feed motor lock

Downloaded from www.Manualslib.com manuals search engine

SC781	**B**	Z-Fold lower stopper motor **Japan Only**	
		The lower stopper motor does not attain the prescribed speed within the specified time.	• Lower stopper motor disconnected, defective • Lower stopper motor overloaded due to obstruction • Lower stopper HP sensor disconnected, defective

SC782	**B**	Z-Fold upper stopper motor **Japan Only**	
		The upper stopper motor does not attain the prescribed speed within the specified time.	• Upper stopper motor disconnected, defective • Upper stopper motor overloaded due to obstruction • Upper stopper HP sensor disconnected, defective

SC790	**B**	Finisher staple waste hopper full	
		The staple waste hopper is full of cut staples.	• If the hopper is full, empty the hopper • If the hopper is not full, the hopper full sensor is disconnected, defective

Downloaded from www.Manualslib.com manuals search engine

SC800: Overall System

SC817	**C**	Boot loader error	
		The boot loader cannot read one of the following: self-diagnostic module, kernel, or one of the files of the root file system, or the check of one of these items on the system SD card failed.	• File or module on the system SD card is corrupted • File or module on the system SD card is illegal • Make sure that the system SD card is the one designed for the machine • Replace system ROM on the controller board

SC818	**C**	Watchdog error	
		While the system program is running, a bus hold or interrupt program goes into an endless loop, preventing any other programs from executing.	• System program defective; switch OFF/ON, or change the controller firmware if the problem cannot be solved • Controller board defective • Controller option malfunction

SC819	**C**	Fatal kernel error		
		Due to a control error, a RAM overflow occurred during system processing. One of the following messages was displayed on the operation panel.		• System program defective • Controller board defective • Optional board defective • Replace controller firmware
		0x696e	init died	
		0x766d	vm_pageout: Virtual Memory is full	
		4361	Cache Error	
		Other		

NOTE: For more details about this SC code error, execute **SP5990** to print an SMC report so you can read the error code. The error code is not displayed on the operation panel.

Downloaded from www.Manualslib.com manuals search engine

SC821	**C**	Self-diagnostic error 2: ASIC		
		The ASIC provides the central point for the control of bus arbitration for CPU access, for option bus and SDRAM access, for SDRAM refresh, and for management of the internal bus gate.		
		0B00	Error code 0xffff ffff is returned when the register Write & Verify check is executed on the ASIC mounted on the controller board. The ASIC controls the ROM and buses for other devices.	• ASIC (controller board defective)
		0B06	ASIC not detected	• ASIC (controller board defective) • Poor connection between North Bridge and PCI I/F: Replace controller board
		0B10	Failed to initialize or could not read connection bus. Data in SHM register incorrect.	• Replace controller board

NOTE: For more details about this SC code error, execute **SP5990** to print an SMC report so you can read the error code. The error code is not displayed on the operation panel.

SC822	**C**	Self-diagnostic error 3: HDD		
		3003	Check performed when HDD is installed: • HDD device busy for over 31 s. • After a diagnostic command is set for Sthe HDD, but the device remains busy for over 6 s. A diagnostic command is issued to the HDD device but the result is an erro	• HDD defective • HDD harness disconnected, defective • Controller board defective
		3004	No response to the self-diagnostic command from the ASIC to the HDDs	• HDD defective
		3013	Mandolin does not respond, the HDD device remains BUSY for more than 31 s, or the BUSY signal does not drop within 6 s after the diagnostic command is issued to the HDDs.	• HDD defective • HDD connector loose or defective • Controller defective
		3014	Error returned from HDD in response to the self-diagnostic command, Mandolin could not be located due to a read/write error at the HDD register.	• HDD defective

Downloaded from www.Manualslib.com manuals search engine

SC824	**C**	Self-diagnostic error 4: NVRAM	
		NVRAM device does not exist, NVRAM device is damaged, NVRAM socket damaged	• NVRAM defective • Controller board defective • NVRAM backup battery exhausted • NVRAM socket damaged

SC826	**C**	Self-diagnostic error 6: NVRAM (option NVRAM)		
		1501	The difference between the 1 s measured for RTC in the NVRAM and the 1 s timeout of the CPU is out of range, or the NVRAM is not detected.	• NVRAM defective • NVRAM installed incorrectly • Replace RTC backup battery
		15FE	Backup battery error. Battery is exhausted or not within rated specification.	• Replace RTC backup battery

SC828	**C**	Self-diagnostic error 7: ROM	
		• Measuring the CRC for the boot monitor and operating system program results in an error. • A check of the CRC value for ROMFS of the entire ROM area results in an error.	• Software defective • Controller board defective • ROM defective

NOTE: For more details about this SC 833, SC834 error, execute **SP5990** to print an SMC report so you can read the error code. The error code is not displayed on the operation panel. The additional error codes (0F30, 0F31, etc. are listed in the SMC report.

SC833	**D**	Self-diagnostic error 8: Engine I/F ASIC	
0F30 0F31		ASIC (Mandolin) for system control could not be detected. After the PCI configuration, the device ID for the ASIC could not be checked.	• Replace the mother board
0F41		The read/write check done for resident RAM on the mother board could not be done correctly.	• Replace the mother board
50B1		Could not initialize or read the bus connection.	• Check for loose connections at the mother board. • Replace the mother board
50B2		Value of the SSCG register is incorrect.	• Check for loose connections at the mother board. • Replace the mother board

SC834	**D**	Self-diagnostic error 9: Optional Memory RAM DIMM	
5101		The write/verify check for the optional RAM chip on the engine mother board gave an error.	• Controller defective • Mother board defective

Downloaded from www.Manualslib.com manuals search engine

SC850	**B**	Net I/F error	
		• Duplicate IP addresses. • Illegal IP address. • Driver unstable and cannot be used on the network.	• IP address setting incorrect • Ethernet board defective • Controller board defective

SC851	**B**	IEEE 1394 I/F error **(Not use)**	
		Driver setting incorrect and cannot be used by the 1394 I/F.	• NIB (PHY), LINK module defective; change the Interface Board • Controller board defective

SC853	**B**	Wireless LAN Error 1 **(Not use)**	
		During machine start-up, the machine can get access to the board that holds the wireless LAN, but not to the wireless LAN card (802.11b or Bluetooth).	• Wireless LAN card missing (was removed)

SC854	**B**	Wireless LAN Error 2 **(Not use)**	
		During machine operation, the machine can get access to the board that holds the wireless LAN, but not to the wireless LAN card (802.11b or Bluetooth).	• Wireless LAN card missing (was removed)

SC855	**B**	Wireless LAN error 3 **(Not use)**	
		An error was detected on the wireless LAN card (802.11b or Bluetooth).	• Wireless LAN card defective • Wireless LAN card connection incorrect

SC856	**B**	Wireless LAN error 4 **(Not use)**	
		An error was detected on the wireless LAN card (802.11b or Bluetooth).	• Wireless LAN card defective • PCI connector (to the mother board) loose

SC857	**B**	USB I/F Error **(Not use)**	
		The USB driver is not stable and caused an error.	• Bad USB card connection • Replace the controller board

SC860	**B**	HDD startup error at main power ON	
		• HDD is connected but a driver error is detected. • The driver does not respond with the status of the HDD within 30 s.	• HDD is not formatted • Label name input during formatting is corrupted; format the hard disk again • HDD is defective

Downloaded from www.Manualslib.com manuals search engine

SC861	**D**	HDD re-try failure	
		At power ON with the HDD detected, power supply to the HDD is interrupted, after the HDD is awakened from the sleep mode, the HDD is not ready within 30 s.	• Harness between HDD and board disconnected, defective • HDD power connector disconnected • HDD defective • Controller board defective

SC863	**D**	HDD data read failure	
		The data written to the HDD cannot be read normally, due to bad sectors generated during operation.	• HDD defective **Note**: If the bad sectors are generated at the image partition, the bad sector information is written to NVRAM, and the next time the HDD is accessed, these bad sectors will not be accessed for read/write operation.

SC864	**D**	HDD data CRC error	
		During HDD operation, the HDD cannot respond to an CRC error query. Data transfer did not execute normally while data was being written to the HDD.	• HDD defective

SC865	**D**	HDD access error	
		HDD responded to an error during operation for a condition other than those for SC863, 864.	• HDD defective.

SC866	**B**	SD card error 1: Confirmation	
		The machine detects an electronic license error in the application on the SD card in the controller slot immediately after the machine is turned ON. The program on the SD card contains electronic confirmation license data. If the program does not contain this license data, or if the result of the check shows that the license data in the program on the SD card is incorrect, then the checked program cannot execute and this SC code is displayed.	• Program missing from the SD card • Download the correct program for the machine to the SD card

SC867	**D**	SD card error 2: SD card removed	
		The SD card in the boot slot when the machine was turned on was removed while the machine was ON.	• Insert the SD card, then turn the machine OFF and ON.

Downloaded from www.Manualslib.com manuals search engine

SC868	**D**	SD card error 3: SD card access	
		An error occurred while an SD card was used.	• SD card not inserted correctly • SD card defective • Controller board defective **Note**: If you want to try to reformat the SD card, use SD Formatter Ver 1.1.

SC870	**B**	Address book data error	
		Address book data on the hard disk was detected as abnormal when it was accessed from either the operation panel or the network. The address book data cannot be read from the HDD or SD card where it is stored, or the data read from the media is defective.	• Software defective. Turn the machine OFF/ON. If this is not the solution for the problem, then replace the controller firmware. • HDD defective.
		More Details • Do **SP5846 050** (UCS (User info control service) Settings – Initialize all Directory Info.) to reset all address book data. • Reset the user information with **SP5832 006** (HDD Formatting– User Information). • Replace the HDDs. • Boot the machine from the SD card.	

SC873	**B**	HDD mail send data error	
		An error was detected on the HDD immediately after the machine was turned ON, or power was turned OFF while the machine used the HDD.	• Do **SP5832-007** (Format HDD – Mail TX Data) to initialize the HDD. • Replace the HDD

SC874	**D**	Delete All error 1: HDD	
		A data error was detected for the HDD/NVRAM after the Delete All option was used. **Note**: The source of this error is the Data Overwrite Security Unit (B735) running from an SD card.	• Turn the main switch OFF/ON and try the operation again. • Install the Data Overwrite Security Unit again. For more, see section "1. Installation". • HDD defective

SC875	**D**	Delete All error 2: Data area	
		An error occurred while the machine deleted data from the HDD. **Note**: The source of this error is the Data Overwrite Security Unit B660 running from an SD card.	• Turn the main switch OFF/ON and try the operation again.

SC880	**D**	File Format Converter (MLB) error	
		A request to get access to the MLB was not answered within the specified time.	• MLB defective, replace the MLB

Downloaded from www.Manualslib.com manuals search engine

SC900: Miscellaneous

SC900	**D**	Electrical total counter error	
		The total counter contains something that is not a number.	• NVRAM incorrect type • NVRAM defective • NVRAM data scrambled • Unexpected error from external source

SC910	**B**	External controller (E-7000) error 1	
SC911		External controller (E-7000) error 2	
SC912		External controller (E-7000) error 3	
SC913		External controller (E-7000) error 4	
		The external controller (E-7000) sends an error message.	• Turn the machine power OFF/ON

SC914	**B**	External controller (E-7000) error 5	
		The external controller (E-7000) sends an error message.	Turn the machine power OFF/ON

SC919	**D**	External controller (E-7000) down	
		The EAC received an interrupt signal from the FLUTE serial driver during print jobs in progress and the connection between the copier and external controller (E-7000) was broken. Note: The EAC is the External Api Converter.	• Switch the machine OFF and ON.

SC920	**B**	Printer error 1	
		An internal application error was detected and operation cannot continue.	• Software defective; turn the machine OFF/ON, or change the controller firmware • Insufficient memory

SC921	**B**	Printer error 2	
		When the application started, the necessary font was not on the SD card.	• Font not on the SC card

Downloaded from www.Manualslib.com manuals search engine

SC925	**B**	Net File function error	
		The NetFile file management on the HDD cannot be used, or a NetFile management file is corrupted and operation cannot continue. The HDDs are defective and they cannot be debugged or partitioned, so the Scan Router functions (delivery of received faxes, document capture, etc.), Web services, and other network functions cannot be used. HDD status codes are displayed below:	• Refer to the four procedures below (Recovery from SC 925).

Here is a list of HDD status codes:

Display	Meaning
(-1)	HDD not connected
(-2)	HDD not ready
(-3)	No label
(-4)	Partition type incorrect
(-5)	Error returned during label read or check
(-6)	Error returned during label read or check
(-7)	“filesystem” repair failed
(-8)	“filesystem” mount failed
(-9)	Drive does not answer command
(-10)	Internal kernel error
(-11)	Size of drive is too small
(-12)	Specified partition does not exist
(-13)	Device file does not exist

Downloaded from www.Manualslib.com manuals search engine

Recovery from SC 925

Procedure 1

If the machine shows SC codes for HDD errors (SC860 ~ SC865) with SC 925, do the recovery procedures for SC860 ~ SC865.

Procedure 2

If the machine does not show one of the five HDD errors (SC860 ~ SC865), turn the machine power OFF and ON. If this is not the solution for the problem, then initialize the NetFile partition on the HDD with **SP5832-011** (HDD Formatting).

NetFiles: Jobs printed from the document server using a PC and DeskTopBinder

- Before you initialize the NetFile partition on the HDD, tell the customer that:
  - Received faxes on the delivery server will be erased
  - All captured documents will be erased
  - DeskTopBinder job history will be erased
  - Documents on the document server, and scanned documents, will not be erased.
  - The first time that the network gets access to the machine, the management information must be configured again (this will use a lot of time).

Before you initialize the Netfile partition with **SP5832-011**, do these steps:

1. Go into the User Tools mode and do “Delivery Settings” to print all received fax documents that are scheduled for delivery. Then erase them.
2. In the User Tools mode, do Document Management> Batch Delete Transfer Documents.
3. Do **SP5832-011**, then turn the machine power OFF and ON.

Procedure 3

If “Procedure 2” is not the solution for the problem, do **SP5832-001** (HDD Formatting – All), then turn the machine power OFF and ON.

SP5832-001 erases all document and address book data on the hard disks. Ask the customer before you do this SP code.

Procedure 4

If “Procedure 3” is not the solution for the problem, replace the HDD.

Downloaded from www.Manualslib.com manuals search engine

SC990	**D**	Software error 2	
		The software performs an unexpected function and the program cannot continue.	• Software defective, re-boot [*1]

SC991	**C**	Software error 3	
		The software performs an unexpected function and the program cannot continue. However, unlike SC990, recovery processing allows the program to continue.	• Software defective, re-boot [*1]

[*1]: In order to get more details about SC990 and SC991:

1) Execute **SP7403** or print an SMC Report (**SP5990**) to read the history of the 10 most recent logged errors.
2) If you press the zero key on the operation panel with the SP selection menu displayed, you will see detailed information about the recently logged SC990 or SC991, including the software file name, line number, and so on. 1) is the recommended method, because another SC could write over the information for the previous SC.

SC992	**C**	Software error 4: Undefined	
		An error not controlled by the system occurred (the error does not come under any other SC code).	• Software defective • Turn the machine power OFF and ON. The machine cannot be used until this error is cleared.

SC997	**B**	Cannot select application function	
		An application does not start after the user pushed the correct key on the operation panel.	• Software bug • A RAM or DIMM option necessary for the application is not installed or not installed correctly.

SC998	**D**	Application cannot start	
		Register processing does not operate for an application within 60 s after the machine power is turned ON. No applications not start correctly, and all end abnormally.	• Software bug • A RAM or DIMM option necessary for the application is not installed or not installed correctly.

Downloaded from www.Manualslib.com manuals search engine

4.3.4 ADDITIONAL SC CODES PRINTED IN SMC REPORTS

These codes are also used in the SMC report.

Codes that have the same number in this series are identified by an additional 4-digit hexadecimal number.

SC No.		Symptom	Possible Cause
853	D	IEEE802 11b card startup error	
		Not used.	
854	D	IEEE802 11b card access error	
		Not used.	
855	D	IEEE802 11b card error	
		Not used.	
856	D	IEEE802 11b card connection board error	
		Not used.	
870	B	Address book data error	
		The address book in the hard disk is accessed. → An error is detected in the address book data; address book data is not read; or data is not written into the address book.	• Data corruption • Defective hard disk • Defective software
		NOTE: To recover from the error, do any of the following countermeasures: Format the address book by using **SP5-832-008** (all data in the address book–including the user codes and counters–is initialized) Initialize the user data by using **SP5-832-006** and -**007** (the user codes and counters are recovered when the main switch is turned ON). Replace the hard disk (the user codes and counters are recovered when the main switch is turned ON).	
920	D	Printer error	
		The printer program cannot be continued.	• Defective hardware • Data corruption • Defective software
925	D	Net file error	
		The management file for net files is corrupted; net files are not normally read. Netfiles: Jobs to be printed from the document server using a PC and the DeskTopBinder software	• Defective hardware • Data corruption • Defective software
992	C	Other system SCs	
		The controller received an unknown SC code from the engine.	• Contact your product specialist.
993	D	Network error	
		The ASIC program of GW controller cannot be continued.	• Defective GW controller

Downloaded from www.Manualslib.com manuals search engine

4.4 ADDITIONAL INFORMATIONS

4.4.1 TRAY PAPER SIZE SETTING

SYMPTOM:

The size of the paper in the tray does not match the paper size that is displayed on the LCD. Sometimes, this causes a jam to occur.

CAUSE:

The operator did not set the side fence or end fence correctly.

Note: This can cause the machine to detect the wrong paper size when “Auto Paper Size Detection” is ON.

ACTION:

Advise users to:

- Make sure to set the end fence [A] and side fences [B] correctly.
- Make sure to **lock** the side fence lock [C].

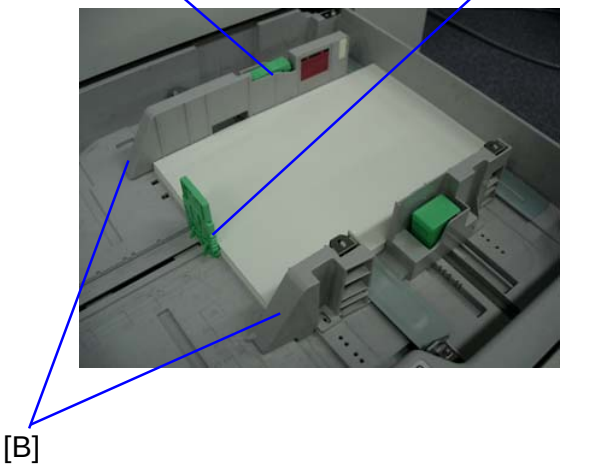



Side fence lock is unlocked.



Side fence lock is **locked**.

Downloaded from www.Manualslib.com manuals search engine

4.4.2 PAPER MISFEED (J098/J099)

SYMPTOM:

“Paper Misfeed (J098)" or "Paper Misfeed (J099)" is displayed on the operation panel.

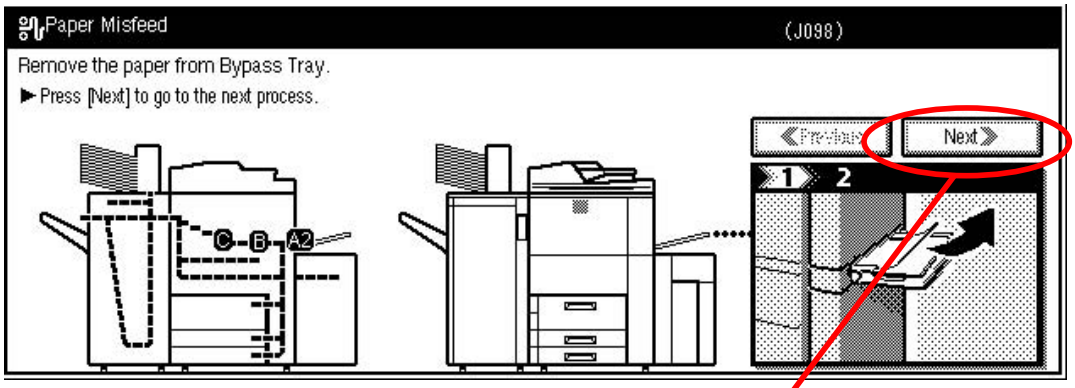

CAUSE: [A]

- J098:
  - The Paper Type Detect setting is ON, and
  - The paper type or thickness setting does not match that of the first sheet

- J099:
  - The Double Feed Detect setting is ON, and
  - The paper type or thickness setting does not match that of the second or later sheets

Downloaded from www.Manualslib.com manuals search engine

ACTION:

Advise end users to do the following.

1. If J098 or J099 occur, press the "Next" button [A] on the operation panel. Then, follow the instructions that are displayed.

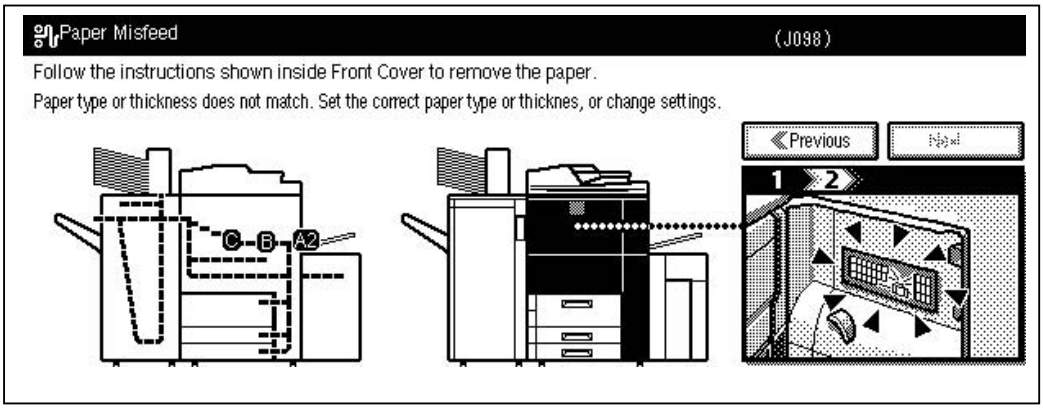

2. Do one of the following:

   - Make sure the type and thickness of the paper match the type and thickness settings in the machine.

   OR,

   - Turn OFF the Paper Type Detect and Double Feed Detect settings (see next page).

   Important: After you turn this setting OFF, if the type or thickness of the paper does not match the settings in the machine, poor fusing can occur. No error message will be displayed.

Downloaded from www.Manualslib.com manuals search engine

How to Change the "Paper Thickness" and "Paper Type" Settings:

1. Access: User Tools → System Settings → Tray Paper Settings (screen 2/4).
2. Press [B] to change the paper type and press [C] to change the paper thickness.

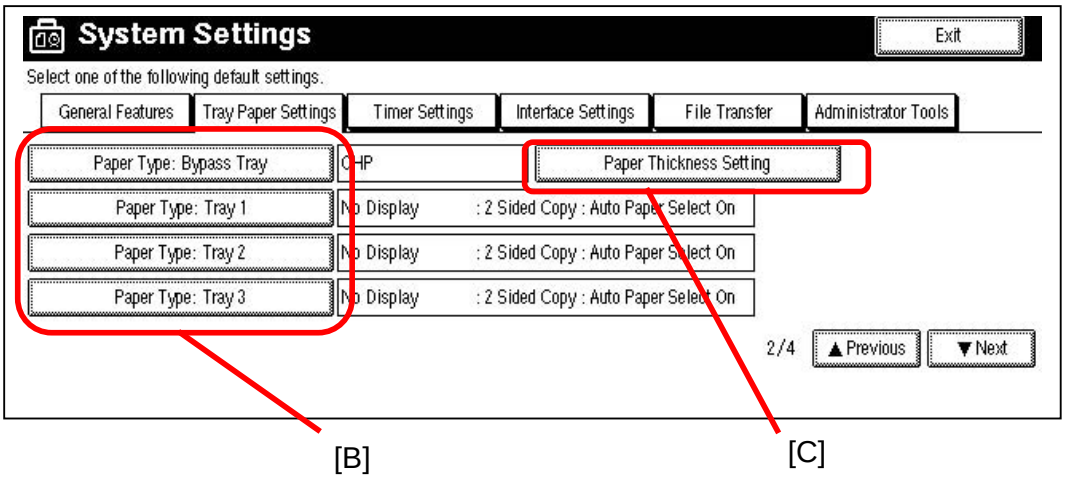

How to Change the "Paper Type Detect" or "Double Feed Detect" Setting:

1. Access: User Tools → System Settings → Tray Paper Settings (screen 4/4).
2. Press [D] to change the "Paper Type Detect" setting (ON/OFF).
3. Press [E] to change the "Double Feed Detect" setting (ON/OFF).

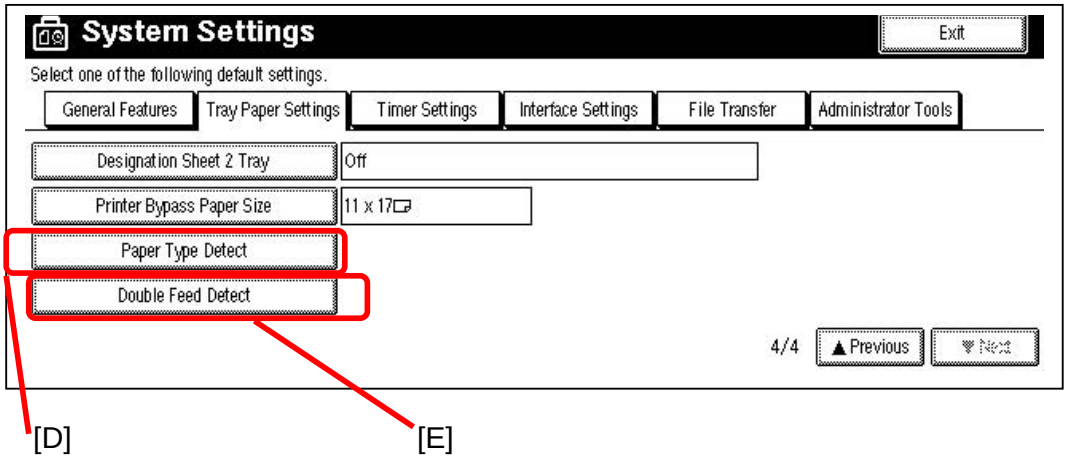

Downloaded from www.Manualslib.com manuals search engine

4.4.3 PAPER FEED SKEW

SYMPTOM:

Paper feed skew sometimes occurs (Printer and Copier).

CAUSE:

The registration roller bushing on rear side is damaged by some reason. One of the reasons of damaging the bushing is that the tip of the rear registration pressure spring is facing the wrong way. As a result, the spring touches the bushing when the registration roller rotates, and damages the bushing.

NOTE: For the location of this bushing, see callout #25 on pg. 100 of the Parts Catalog (“43. Transfer Entrance 2")

SOLUTION:

- Check the rear bushing of the registration roller.
  - If the bushing is damaged, replace it with a new one.

- Check the position of the rear registration pressure spring (**see procedure below**).
  - If the spring is in the “NG position”, change the spring to the “OK” position.

NOTE: For the location of this spring, see callout #22 on pg. 100 of the Parts Catalog.

HOW TO CHECK THE POSITION OF THE REAR REGISTRATION PRESSURE SPRING:

1. Press down the hinge spring [B] and remove the front cover [A].

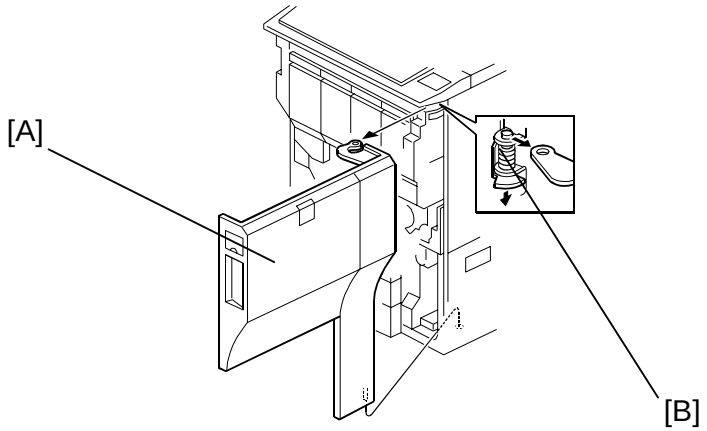

Downloaded from www.Manualslib.com manuals search engine

2. Pull out the lower drawer unit [C].
3. Remove the 3 clamps [D].

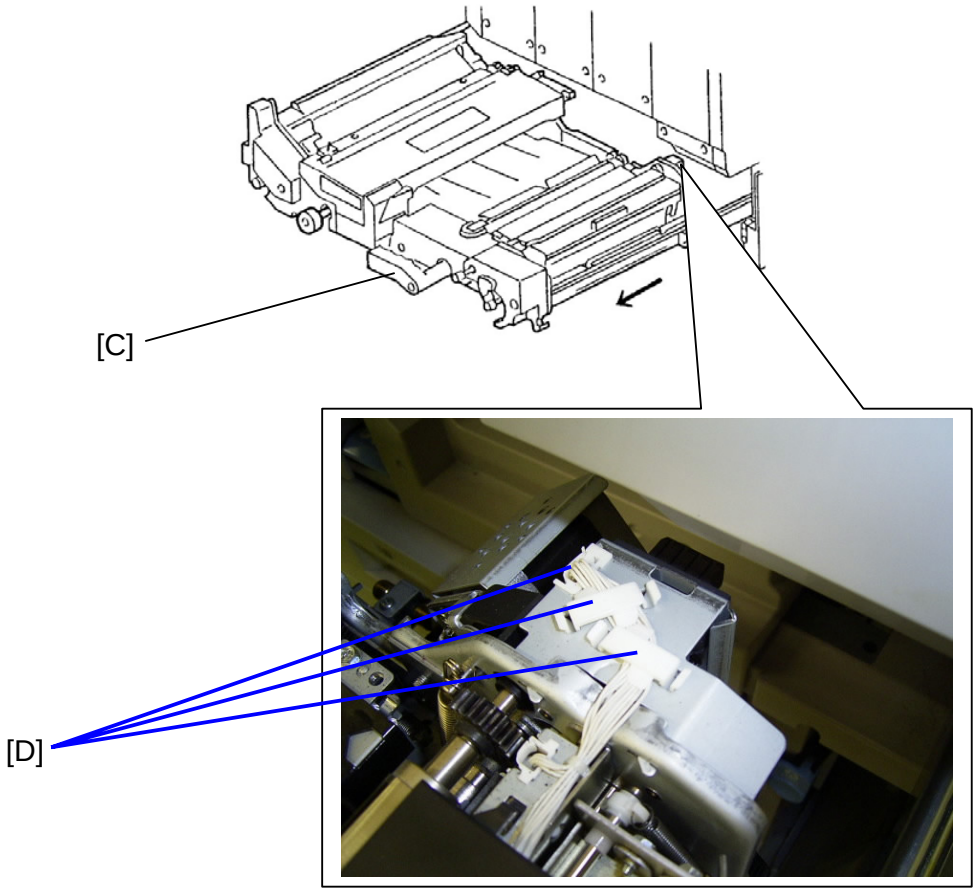

4. Remove 2 clamps [E] and disconnect the connector [F].

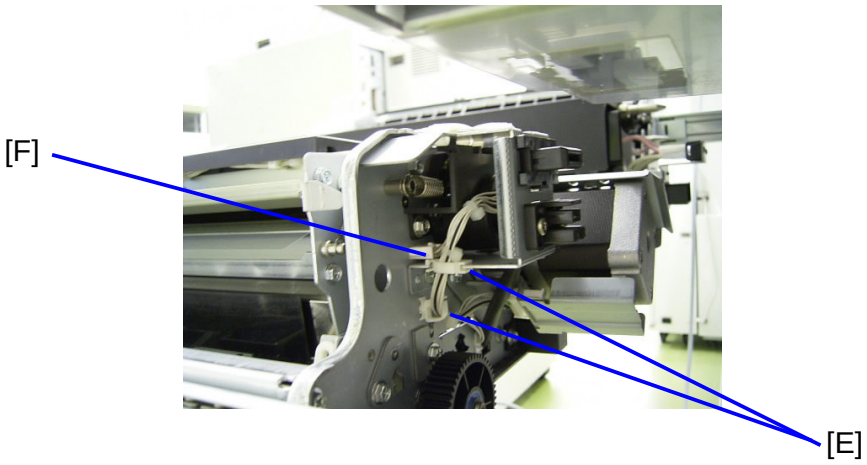

Downloaded from www.Manualslib.com manuals search engine

5. Remove the bracket [G] (1 screw).

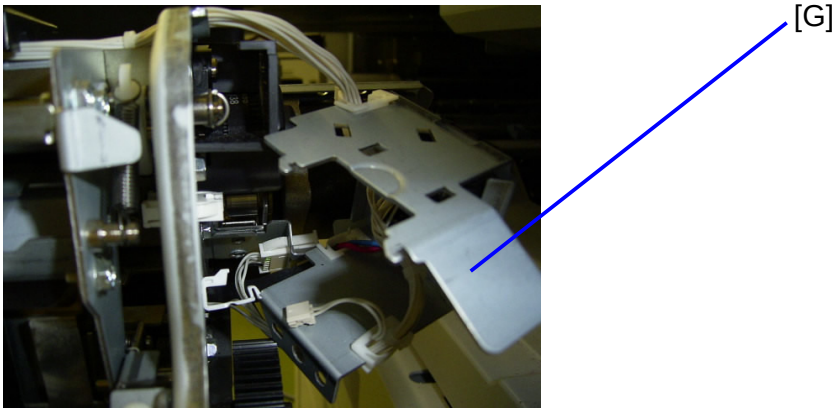

6. Remove the harness cover [H] (1 screw).

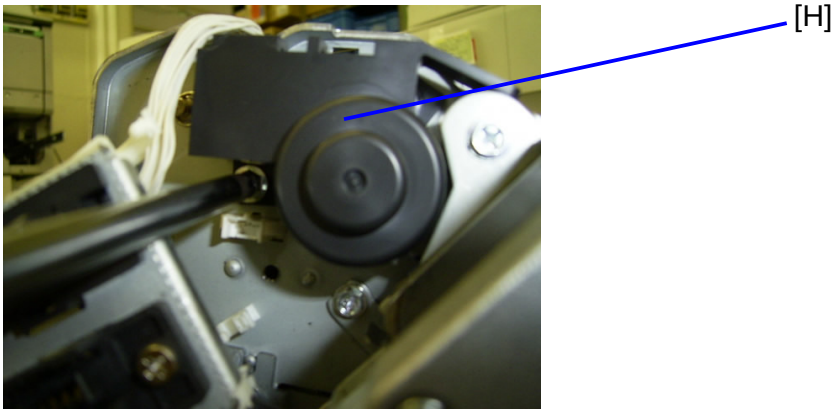

Downloaded from www.Manualslib.com manuals search engine

7. Check the position of rear registration pressure spring [I]. If the spring is in the NG position, change the spring to the **OK position**.

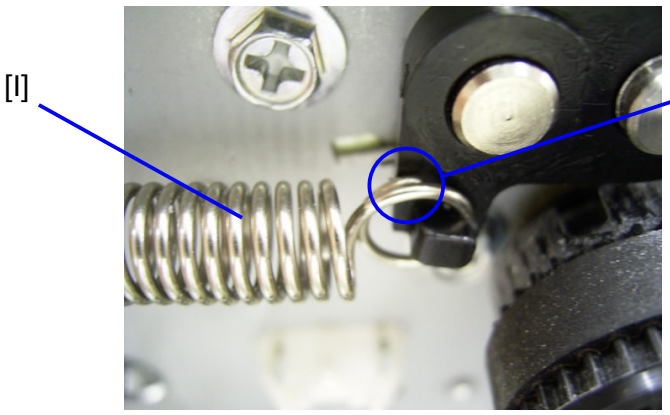

NG position
The area where the spring loops meet [J] is facing up

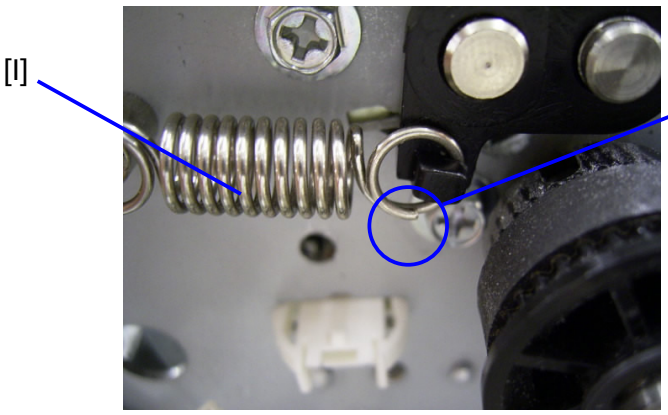

OK position
The area where the spring loops meet [J] is facing down

Downloaded from www.Manualslib.com manuals search engine

4.4.4 WHITE LINE IN SUB-SCAN DIRECTION ON SINGLE COLOR SOLID IMAGE.

SYMPTOM:

A white line [A] appears along the paper feed direction in solid image areas that use one toner color (C, M, Y or K).

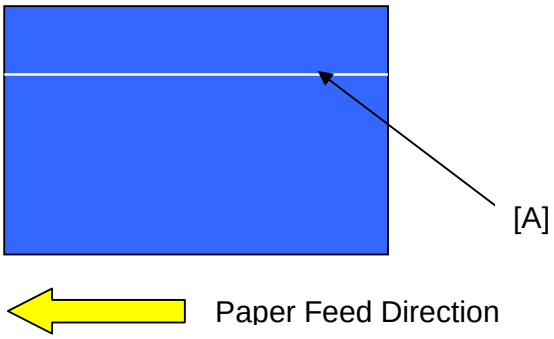

CAUSE:

Dust or other foreign particles get into the development unit, and then get stuck between the doctor blade and development sleeve.

ACTION:

- When the symptom occurs:

1. Remove the developer from the development unit(s) that shows the symptom.
2. Remove the extra toner and developer from the development unit(s) with a vacuum cleaner.
3. Install the new developer.

- When you install the developer cartridge or replace the developer:
  Make sure to put the developer cartridge on a **clean** surface.

Downloaded from www.Manualslib.com manuals search engine

4.4.5 DIRTY BLACK LINE IN CUB-SCAN DIRECTION OR DIRTY BACKGROUND

SYMPTOM:

1. A dirty black line [A] shows in the sub-scan direction in single color (C, M, Y or K).

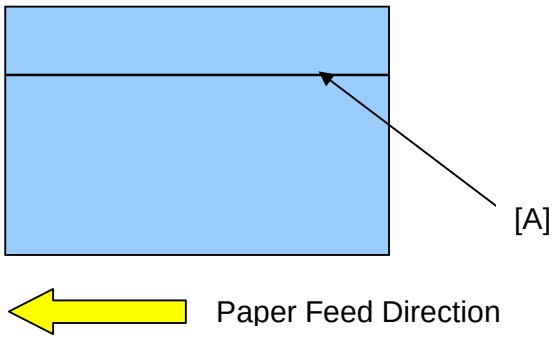

<<Example of Cyan halftone image>>

2. Dirty back ground in halftone image.

CAUSE:

Drum charge roller becomes dirty. This can be a common occurrence especially in high copy volume machines, or, machines used under low temperature/low humidity conditions (temperature 10 °C or 50 F/ humidity 15%).

ACTION:

Remove the drum charge roller from the PCU, and clean it according to the procedure explained below.

1. Remove the PCU, whose color has the symptom. (See “APPENDIX” of this section for details on how to print out the K, M, C or Y halftone test pattern).

NOTE: Make sure you put the removed PCU on the PCU stand when you do these procedures. Also, make sure to place a sheet of paper on the PCU to not let the OPC drum gets exposed to light.

Downloaded from www.Manualslib.com manuals search engine

2. Remove the charge roller unit [A] (2 screws). This unit contains the charge roller and the charge roller cleaning roller.

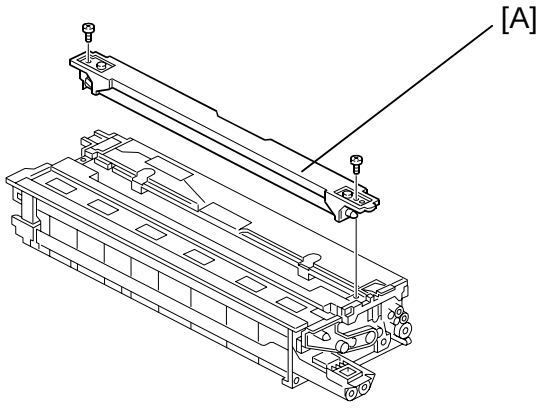

3. Remove the drum charge roller with gear and bushing.

4. Remove the drum charge roller gear [B] and the bushing [C] at the same time (See below figure).

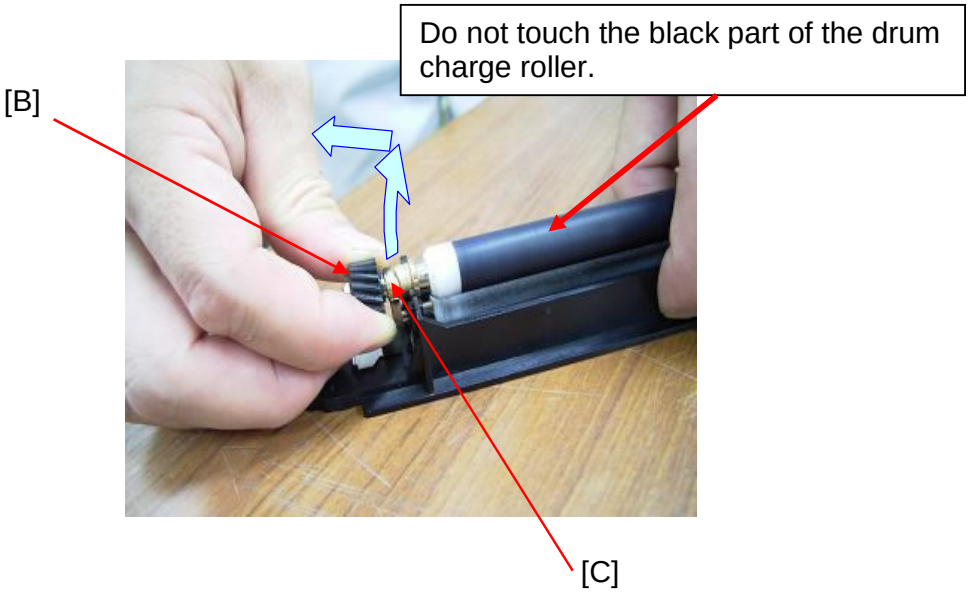

NOTE: Do not remove the bushing on the non-gear side.

Downloaded from www.Manualslib.com manuals search engine

5. Clean the drum charge roller.
   1) Wipe the drum charge roller with a clean **dry** cloth.

   2) Then, wipe the drum charge roller with **a wet** cloth.
   NOTE: Use "**water**" to make the cloth wet. Do not use alcohol or any solvent.

   3) Then, wipe the drum charge roller with a clean **dry** cloth again. Wait for the drum charge roller to dry.





6. Clean the charge roller cleaning roller [D] with vacuum cleaner if it is also dirty.

   NOTE: Make sure you do not to touch the charge roller cleaning roller with the vacuum cleaner nozzle [E].

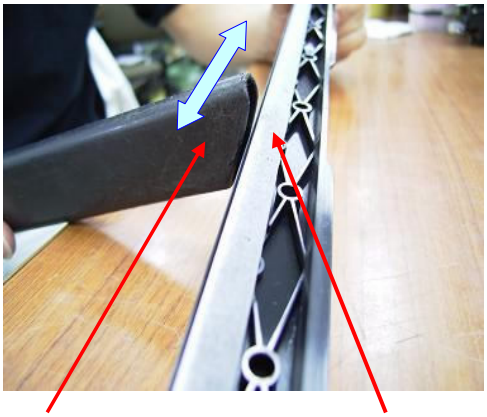



Downloaded from www.Manualslib.com manuals search engine

7. Reinstall the drum charge roller onto the charge roller unit (1-bushing, 1-gear).

NOTE: Make sure bushing is inserted correctly inside the molding guide [F]. Also make sure the charging terminal [G] touches the charge roller end correctly.

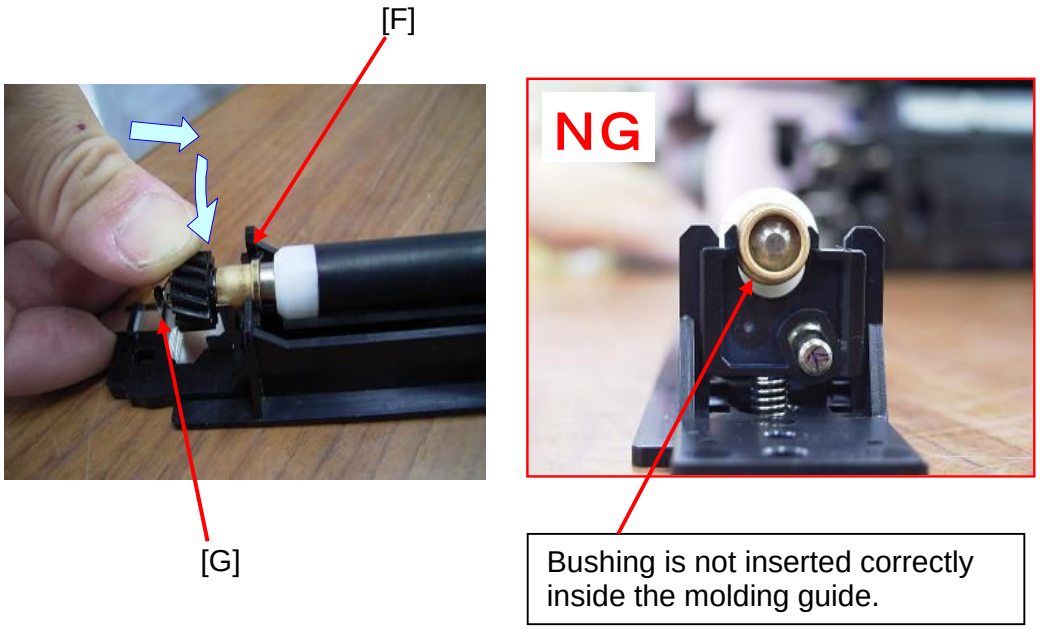

8. Reinstall the charge roller unit onto the PCU (2 screws).

Downloaded from www.Manualslib.com manuals search engine

APPENDIX:

How to print out the Black, Magenta, Cyan, or Yellow halftone test pattern to confirm the symptom.

1. Enter SP 2109 2 (Test Pattern: Select Pattern).

2. Select "8: 2-Dot Independent" pattern, then press the "OK" button.

3. Under this condition, enter following SP according to the color you want to print out.

   SP 2109 5 (Density: K) default value = 63, variable range 0 to 63

   SP 2109 6 (Density: M) default value = 63, variable range 0 to 63

   SP 2109 7 (Density: C) default value = 63, variable range 0 to 63

   SP 2109 8 (Density: Y) default value = 63, variable range 0 to 63

   For example, if you want to print out Magenta half tone, change the settings as shown below.

   SP 2109 5 (Density: K) to 0

   SP 2109 7 (Density: C) to 0

   SP 2109 8 (Density: Y) to 0

4. Press "Copy Window" button.
5. Select the Full Color mode. (In ACS mode, you cannot print out the halftone color image).
6. Select A3/DLT paper.
7. Press the "Start" button on the operation panel.

Downloaded from www.Manualslib.com manuals search engine

4.4.6 EXPANDED SOFT TONER CARTRIDGE

SYMPTOM:

The Soft Toner Cartridge (STC) expands and cannot be installed in the copier bins.

CAUSE:

When the STC is brought to an elevation of 1000m (3,280ft.) or higher, the difference in air pressure makes the STC expand.

ACTION:

1. Wait 24 hours for the STC to return to its normal size naturally.

2. If the customer cannot wait 24 hours, advise them to use the STC Air Release Kit (service parts: P/N B1329710).
   NOTE: This is a customer-usable part. The instructions are inside the kit.

Downloaded from www.Manualslib.com manuals search engine

4.4.7 SYSTEM STOP CONTROL DUE TO THE TEMPERATURE LIMITATION

OVERVIEW:

1. The “System Stop Control” feature stops the machine during a copy or print job, and “Self-checking…” is displayed on the LCD.

   Conditions:
   - Engine firmware v1.15.0 (B1325402L) or newer
   - The temperature/humidity sensor output is 41°C (105.8F) or higher.

   Other notes:
   - This feature keeps the temperature of the toner in the development unit below 50°C (122F). If this toner is at 50C or higher, the toner starts to clump. This can cause white lines in solid image areas, or a machine failure from toner clumps in the toner supply tube and waste toner transport coil.
   - The temperature/humidity sensor is on the K-PCU.

2. The following factors make it easy for the temperature/humidity sensor output to reach 41°C (105.8F) or higher:
   - "The temperature of the installation environment is 30°C (86F) or higher" AND "The machine prints for 2 hours non-stop in full-color mode".

3. If the user makes 100% black and white copies/prints ONLY, this feature can be turned OFF in SP9405-001.

ACTION:

1. Please explain the following points to end users:
   - The basic meaning of the System Stop Control feature.
   - The machine will start up again after it cools down and the temperature/humidity sensor output is 40°C (104F) or lower. This will take about one hour.
   - After the machine finishes a non-stop, full-color print job, do not turns off the machine main power switch. Wait until the cooling fan turns off.
     Note: If the user turns off the main power just after the job, the temperature/humidity sensor output increases quickly. The next time the main switch is turned on, System Stop Control will stop the machine.

2. If the user only makes 100% black and white copies/prints, this feature can be turned OFF in SP9405-001.

Downloaded from www.Manualslib.com manuals search engine

4.4.8 LOW POWER MODE TEMPERATURE

SYMPTOM:

Fusing hot roller yield may decrease, or, the fusing hot roller could get damaged in the worst case.

CAUSE:

Hot roller has been exposed to excessive heat by the fusing lamp inside the Hot Roller.

ACTION:

- Never increase the Low Power Mode temperature setting (SP 1202 11) for the fusing lamp inside the Hot Roller higher than default setting.

SP number	Description	Value	Function
SP 1202 11	Hot Roller Energy Saver2 (Hot roller temperature in Low Power Mode)	Default: -50 Adjustable range: 0 to -200	The value set by this SP determines the additional value applied to the Hot roller temperature in Stand-by mode.

Default value (-50) means that the hot roller temperature in Low Power Mode is "Hot Roller temperature in Stand-by mode minus 50 degrees". This setting is correct.

Example: If you set -30, the hot roller temperature in Low Power Mode will be "Hot Roller temperature in Stand-by mode minus 30 degrees". This setting is **not good** for Hot Roller yield.

Example: If you set -80, the hot roller temperature in Low Power Mode will be "Hot Roller temperature in Stand-by mode minus 80 degrees". This setting is correct.

- Please instruct the end user that if the "Energy Saver Timer" is set longer than its default (15minutes by User Tool) the fusing hot roller yield may decrease according to the machine condition.

NOTE: End user can change the "Energy Saver Timer" with the following procedure.
User Tools → System Settings → Timer Settings → Energy Saver Timer

Downloaded from www.Manualslib.com manuals search engine

Machine Status	Transition time setting in UP: User Tools ➔ System Settings ➔ Timer Settings	Hot Roller Heater ON/OFF	SP number for Hot Roller Temperature
Warming Up	9 min (Fixed)	ON	SP 1105 2
Operation	-	OFF	-
Stand-by Mode	-	ON	MM: SP 1105 36 LL: SP 1105 37 HH: SP 1105 38
Panel-off Mode	Panel-off Timer Default: 60 sec. (10 to 999 sec)	ON	(Same with Stand-by Mode)
Low Power Mode	Energy Saver Timer Default: 15 min (1 to 240 min)	ON	SP 1202 11
Auto Off Mode	Auto Off time Default: 90min (1 to 240 min)	OFF	-

Refer the diagram in the service manual "6.17.4 ENERGY SAVER MODE".

Downloaded from www.Manualslib.com manuals search engine

4.4.9 POOR FUSING ON 100g/m^2 PAPER

SYMPTOM:

Part of the image peels off the paper.

Note: This symptom is most noticeable under these conditions:

- When solid images are printed onto 100 g/m^2 (28lb. bond) paper in full color mode
- When using a PostScript3 unit type3260 (B761) or using EFI printer controller (G815: E-7000)

CAUSE:

Not enough heat is supplied to the surface of the fusing roller.

SOLUTION:

Add the "Middle Thickness Paper Mode" by the following action.

ACTION:

Confirm the following Firmware version, and then follow the procedure described from the next page.

Engine: Ver.1.20.2_08 (B1325402Q) or newer

System/Copy: Ver.1.23 (B1325750M) or newer

IMPORTANT:

- Update both the Engine and System/Copy firmware at the same time.
- **Never** change the setting for Sp1105-036 (Hot Roller Wait Temp: Norm, default = 145 deg). If you increase the value above 145°C, the hot roller surface can be damaged (Refer: chapter 4.4.8).
- After you finish the procedure below, turn the machine main power OFF/ON.

Downloaded from www.Manualslib.com manuals search engine

Final Solution: Middle Thickness Paper Mode

1. Power Supply Voltage Check when using before applying the final solution.

   Check the Power Supply Voltage during the continuous printing. If the power supply voltage is lower than 220V, change the heating roller lamp2 duty for FC printing.

   SP1108-008 (Htg Roll Lamp2 Norm: FC)

   Change to 100 (default: 83)

   SP1108-009 (Htg Roll Lamp2 Scan: FC)

   Change to 83 (default: 66)

2. Toner Maximum Limitation

   If the customer agrees to the toner maximum limitation change, reduce the value as follows:

   - For machines that use a PostScript3 unit type3260 (B761) printer driver: Set SP1106-001 to a value of 200.

Printer SP Number	Description	Default Settings	Final Solution	NOTE
1106-001	Toner Limit: Photo	260	200	Toner maximum limitation for Photo mode.

   - For the EFI printer controller (G815: E-7000):

1) Open the "E-7000 PS Document Properties" dialog.
2) Click on the “Fiery Printing" tab, and then select the "Image Quality" option.
3) Change the "Toner Reduction" setting to ON.

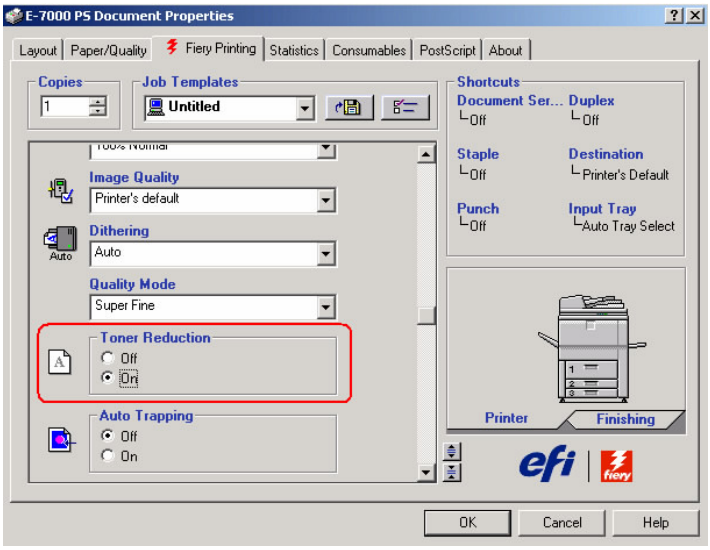

Downloaded from www.Manualslib.com manuals search engine

3. Activate "Middle Thickness Paper Mode"

To activate the "Middle Thickness Paper Mode", change the following SP settings as a set.

1) **SP1107-006** (Mode Shift / Feed Norm Temp):
Change to 1 (default: 0)

NOTE: This is to turn ON the "Middle Thickness Paper Mode".

2) **SP2307-006** (Set Ptype Link Special Paper):
Change to "0: Normal Paper", then press "OK" button. (Default: "3 Special Paper 1").

NOTE: This is to change the paper transfer conditions to those for Normal Paper.

3) **SP1200-006** (1st CPM Down / CPM Norm / Hi: FC):
Change to 40 (default: 30)

NOTE: This is to change the paper feed interval condition for High & Normal Temperature in FC mode.

4) **SP1200-008** (1st CPM Down /CPM Low Temp: FC)
Change to 35 (default: 25)

NOTE: This is to change the paper feed interval condition for Low Temperature in FC mode.

4. Select the "Special Paper" for the tray to which you need to apply "Middle Thickness Paper Mode."

User Tools → System Settings → Tray Paper Settings → Paper Type: Tray XX (XX: tray number): Special Paper (default: No display)

NOTE:

- This setting is kept even when the main power switch is turned OFF/ON ("Special" is displayed for the trays which have been set to this mode).
- It can be selected for each paper tray independently.

5. Select the Paper Thickness Setting to "Normal Paper" for the tray, on which you need to apply "Middle Thickness Paper Mode."

User Tools → System Settings → Tray Paper Settings → Paper Thickness Setting

Then, select "Normal (72-126g/m^2)" for the tray.

Downloaded from www.Manualslib.com manuals search engine

6. Change the Fusing Temperature settings according to the type of "Middle Thickness Paper Mode", which is most appropriate for the poor fusing symptom.

1) "Middle Thickness Paper Mode -1" (Default)

NOTE: This setting is effective both for poor fusing and the sponge image / stripper streaks. You do NOT have to change any SP settings (Default settings are OK).

- SP1105-013 (Htg Roll Sn1: Ctr / 1-S: Thk3: FC: NS: CPM)
  Default: 180.

- SP1105-021 (Htg Roll Sn1: Ctr / 2-S: Thk3: FC: NS: CPM
  Default: 180.

2) "Middle Thickness Paper Mode -2"

NOTE: This setting should be selected if the effectiveness of "Middle Thickness Paper Mode-1" is not enough for the poor fusing. However, with this setting, it is easier for stripper streaks to occur.

Change the following SP setting as a set.

- SP1105-013 (Htg Roll Sn1: Ctr / 1-S: Thk3: FC: NS: CPM)
  Change to 185 (default: 180)

- SP1105-021 (Htg Roll Sn1: Ctr / 2-S: Thk3: FC: NS: CPM
  Change to 185 (default: 180)

3) "Middle Thickness Paper Mode -3"

NOTE: This setting should be selected if the effectiveness of "Middle Thickness Paper Mode-2" is still not enough for the poor fusing. However, with this setting, it is easier for stripper streaks to occur.

Change the following SP setting as a set.

- SP1105-013 (Htg Roll Sn1: Ctr / 1-S: Thk3: FC: NS: CPM)
  Change to 190 (default: 180)

- SP1105-021 (Htg Roll Sn1: Ctr / 2-S: Thk3: FC: NS: CPM)
  Change to 190 (default: 180)

- SP1107-001 (Mode Shift Low Temp SW)
  Change to 0 (default: 5)

Downloaded from www.Manualslib.com manuals search engine

NOTE: Please refer to the below table to select most appropriate type of Middle Thickness Paper Mode.

Type	Effectiveness level for poor fusing.	Stripper Streaks level.
"Middle Thickness Paper Mode -1" (Default)	Less than previous temporary solution B or B+	Better than previous temporary solution B or B+
"Middle Thickness Paper Mode -2"	Same as previous temporary solution B or B+	Same as previous temporary solution B or B+
"Middle Thickness Paper Mode -3"	Better than previous temporary solution B or B+	Less than previous temporary solution B or B+

Side effects of various combinations of solutions

Side Effects	Previous Temporary Solution			Final Solution in this RTB
	Solution A	Solution B	Solution B+	
1. Stripper streaks	X	X	X	See above table
2. Color reproduction	(None)	(None)	X	X
3. Paper curl with Normal paper	X	X	X	X (Only for the tray for which Middle Thickness Paper Mode is selected)
4. System stop control condition	X	X	X	X (Only for the tray for which Middle Thickness Paper Mode is selected)
5. 1st Print Time will be longer	(None)	(None)	(None)	X See NOTE 1
6. Paper Feeding Interval Adjustment	(None)	(None)	(None)	X See NOTE 2

”X”: Indicates a side effect

NOTE1: 1st Print Time in Final solution: 7sec to 14.5 sec (maximum)
NOTE2: During this adjustment, the printing speed will reduce during the first 3-5 A3/DLT sheets.
1st 5 pages: 43.75cpm, after that 45cpm (in e-STUDIO4500c)
1st 5 pages: 51.25cpm, after that 55cpm (in e-STUDIO5500c)

Downloaded from www.Manualslib.com manuals search engine

APPENDIX:

Default settings of SP modes related to previous Temporary Solutions A, B and B+

SP Number	Description	Default Settings	NOTE
1105-003	Htg Roll Sn1: Ctr Wait Temp: Norm	177 deg	Heating Roller Temperature in Standby mode.
1105-006	Htg Roll Sn1: Ctr 1-S: Norm: 1 Col	175 deg	Heating Roller Temperature for normal paper simplex 1C.
1105-007	Htg Roll Sn1:Ctr 1-S:Norm:FC	175 deg	Heating Roller Temperature for normal paper simplex FC.
1105-008	Htg Roll Sn1:Ctr 1-S: Trace:1C	160 deg	Heating Roller Temperature for thin paper simplex 1C
1105-009	Htg Roll Sn1: Ctr 1-S: Trace: FC	160 deg	Heating Roller Temperature for thin paper simplex FC
1105-014	Htg: Roll Sn1: Ctr 2-S: Norm: 1C	175 deg	Heating Roller Temperature for normal paper duplex 1C
1105-015	Htg: Roll Sn1: Ctr 2-S: Norm: FC	175 deg	Heating Roller Temperature for normal paper duplex FC
1105-016	Htg: Roll Sn1: Ctr 2-S: Trace: 1C	160 deg	Heating Roller Temperature for thin paper duplex 1C.
1105-017	Htg: Roll Sn1:Ctr 2-S: Trace: FC	160 deg	Heating Roller Temperature for thin paper duplex FC.
1105-029	PressRoll Sensor Wait Temp: Norm	152 deg	Pressure Roller Temperature for Stand-by mode.
1107-007	Mode Shift Press Temp: Norm	5 deg	Additional Temperature for heating roller at the start of print job.
1107-008	Mode Shift Press Time: Norm	10 sec	Additional Temperature applying time for heating roller at the start of print job.
1107-015	To Cooling Mode Trace Cool End	5	Copy/Print job starts when the heating roller temperature reaches the setting temperature plus this value.
1108-008	Htg Roll Lamp2 Norm: FC	83	Heating Roller Lamp2 duty for FC printing
1108-009	Htg Roll Lamp2 Scan: Norm: FC	66	Heating Roller Lamp2 duty for FC scanning and printing.
1108-017	Htg Roll Lamp2 At Reload	27	Heating Roller Lamp2 duty during machine warming up.
9406-001	Fan Op Temp	0	Cooling fan full rotation 0: default (32C) 1: 30C 2: 28C

Downloaded from www.Manualslib.com manuals search engine

4.4.10 ABNORMAL SHIFT TRAY MOVEMENT OF SR842 (B706) WITH EFI PRINTER CONTROLLER (E-7000)

SYMPTOM:

The shift tray for the 3000-sheet finisher SR842 (B706) finisher does not move correctly when all of the following conditions are met:

- The EFI printer controller E-7000 (G815) is used, and
- “Collate” is ON in the E-7000 printer driver, and
- Multiple sets are printed out, and one set = one sheet of paper

CAUSE:

Under the above conditions, the EFI printer controller E-7000 (G815) sends the “shift” command to the shift tray for every sheet, and the shift tray is not able to respond quickly enough.

SOLUTION:

Advise the user to turn the “Collate” setting OFF in the E-7000 printer driver if one set = one sheet of paper. This is because the Collate function is not necessary when one set = one sheet.

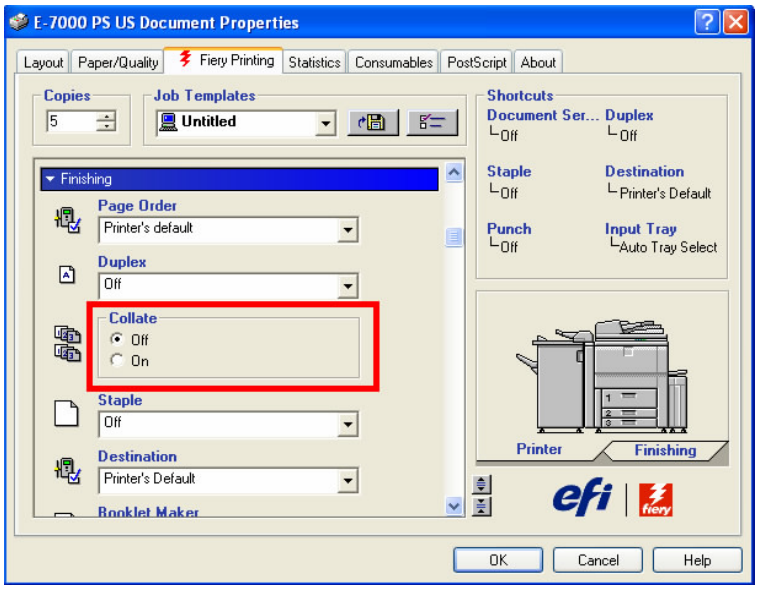

Downloaded from www.Manualslib.com manuals search engine

4.4.11 POOR FUSING ON 100g/m^2 PAPER

SYMPTOM:

Streaks are visible on the glossy image printed with full coverage. Visible level of streaks differs according to the lighting angle. The streaks can be classified following 3 types.

1. Type A:

   Streaks, whose width is equal to the fusing separation pawls (6 mm), in the paper feeding direction corresponding to the fusing separation pawls position. This symptom occurs especially on the solid image on the Thick paper.

2. Type B:

   Very sharp lines (the width is less than 0.5 mm) in the paper feeding direction corresponding in position to the fusing separation pawls. This is also visible especially on the Thick paper.

3. Type C:

   The streaks (the width is 1 through 2 mm) are in the same position as the edge of the previous paper size used. Type C occurs when you make 500–1000 prints with the same size/direction, and then change to a wider paper size.
   Example: Make 1000 prints with A4 SEF, and then change to A4 LEF.

Downloaded from www.Manualslib.com manuals search engine

CAUSE and SOLUTION:

Use the table below to check if the reported symptom is Type A, Type B or Type C.

- The causes and solutions are different for Type A, Type B and Type C.
- After reading this table, if you do not know which type the reported symptom is, contact your sales company for support.

Symptom Type	Cause	Solution
Type A	Due to the small grooves on the fusing belt created by the separation pawls, which touch during the rotation of fusing belt, the glossiness of the fused solid image differs at the position of separation pawls.	"Fusing Anti-glossy Streak Kit (P/No. B1329713)" is effective. However, it takes a certain amount of time to effect for Type A. It depends on the type of paper, the condition of fusing belt when this kit is applied. See next page.
Type B	The fusing belt is scratched by some foreign objects, which are stuck between the separation pawls and paper. Very sharp scar line(s) are made on the fusing belt. This scar line made a visible line on the fused solid image.	Do both of the following: 1. Clean all of the separation pawls to remove the foreign objects. 2. Replace the damaged fusing belt with new one.
Type C	The paper dust from the edge of small sized paper is stuck on the fusing belt. The stuck paper dust comes to be the bands on fusing belt, which leads to the streaks on the fused solid image.	"Fusing Anti-glossy Streak Kit (P/No. B1329713)" is effective. See next page.

Downloaded from www.Manualslib.com manuals search engine

Fusing Anti-glossy Streak Kit (P/N B1329713):

Detailed part information:

The kit consists of the following parts (see illustration “Parts Locations” on next page):

Gear Hot Roller: 44Z	[A]
Gear Upper 52Z	[B]
Gear 49Z	[C]
Pressure Roller D50	[D]

Important Notes:

1. This kit is only effective for Type A and Type C explained above.
2. After you install this kit for Type A, it may take some time before the image quality improves. If the customer does not wish to wait, replace the fusing belt.
3. After you install this kit, the line speed of the fusing belt is 6% faster than the line speed of the pressure roller. (Default: Same speed). As a result, the yield of the fusing belt changes from 600K to 300K.
4. After you install the kit, make a visible mark on the outside of the fusing unit. Example: Write, “Fusing anti-glossy streaks kit installed” on the outside of the fusing unit.

   This is because the parts in this kit are not available as individual service parts. They are different from the service parts listed in MB132001.
5. In the future, if any of the four parts above needs to be replaced, and there is a mark on the fusing unit like the example above, make sure to install the whole Fusing Anti-glossy streak kit. In such a case, do not use the parts in MB132001.

Downloaded from www.Manualslib.com manuals search engine

Parts Location ([A] and [B])

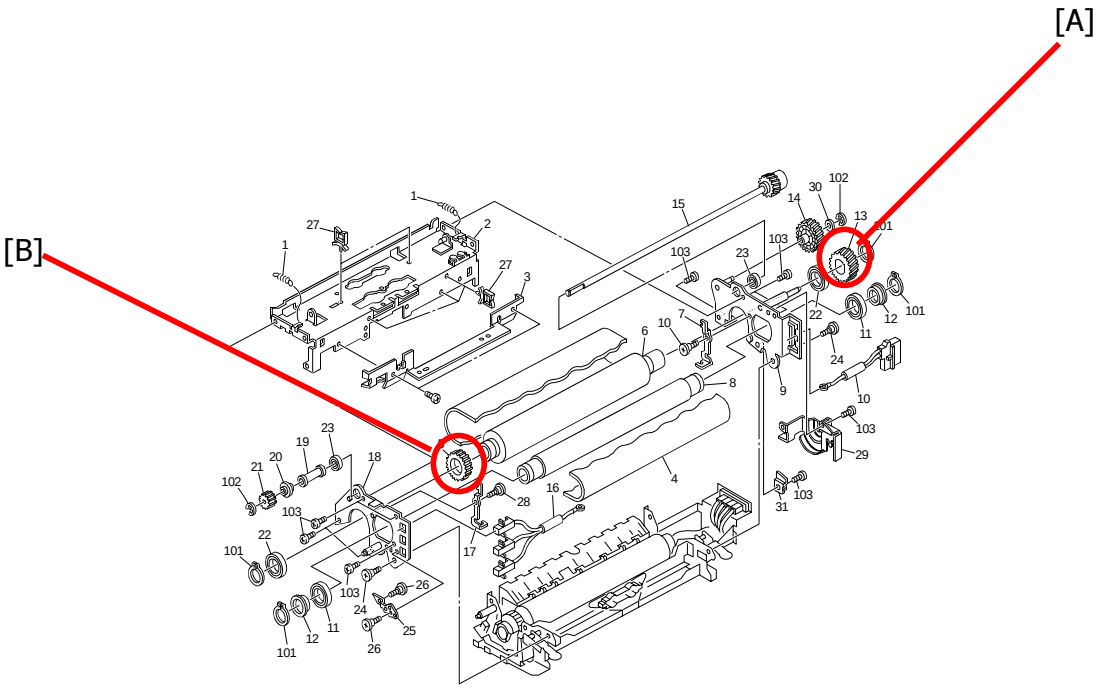

Parts Location ([C] and [D])

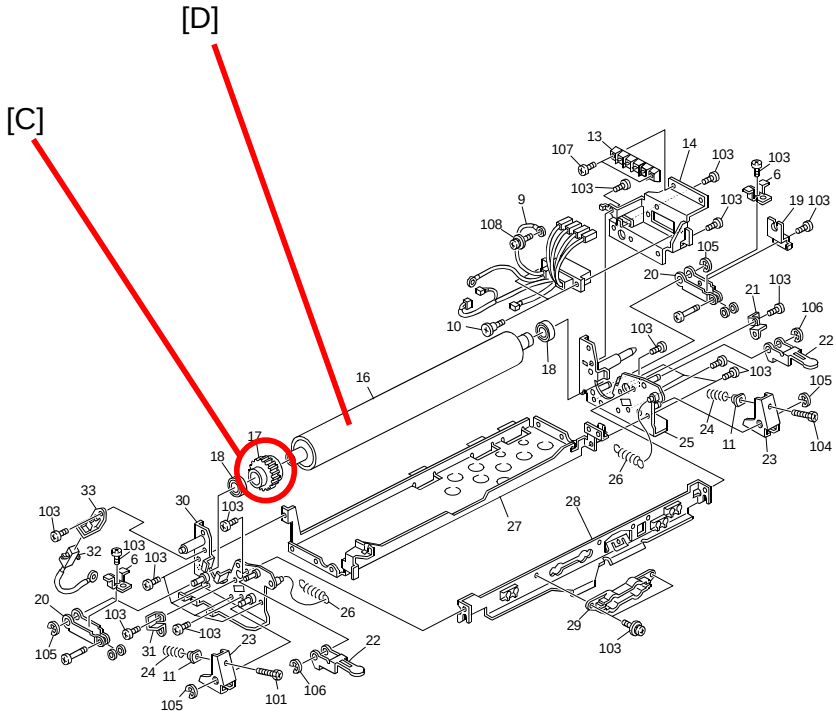

Downloaded from www.Manualslib.com manuals search engine

4.4.12 COPIER FIRMWARE UPDATE NOTICE WHEN COLOR CONTROLLER E-7000 IS INSTALLED

Important Note for Firmware Update on e-STUDIO4500c/5500c Machines Connected to an E-7000 Color Controller

Before you update the Copier Engine firmware with an SD card, make sure to turn off the power switch on the Color Controller E-7000 (see Procedure below).

REASON:

If the power switch on the Color Controller E-7000 is on, the firmware update will not start. This is because the e-STUDIO4500c/5500c cannot perform the update while it receives the boot-up status information from the E-7000.

PROCEDURE:

Do the following when you update the Copier Engine firmware on e-STUDIO4500c/5500c machines connected to a Color Controller E-7000:

1. Press the operation switch until the “On” indicator turns off.

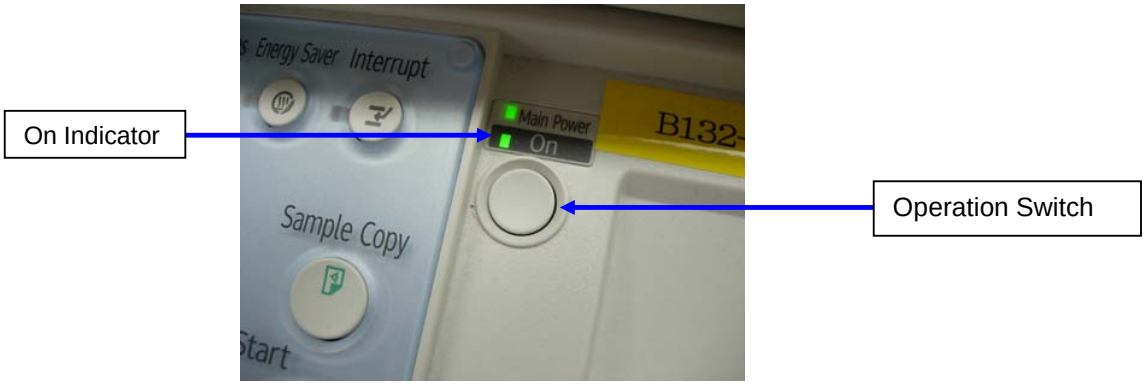

Important:

Before you do Step 2, make sure that the green light of the “On” indicator turns off. If you do Step 2 when the indicator is still on, this can damage the HDD memory and cause a malfunction.

Downloaded from www.Manualslib.com manuals search engine

2. Turn off the e-STUDIO4500c/5500c main power switch.
   NOTE: The Color Controller E-7000 will shut down automatically.

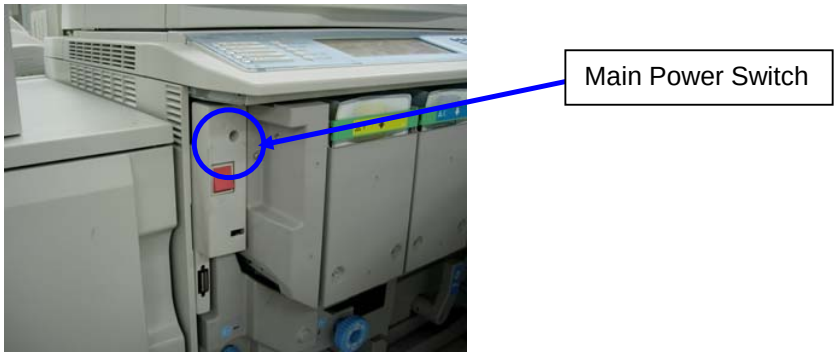

3. Wait for the E-7000 diagnostic LEDs to turn off.

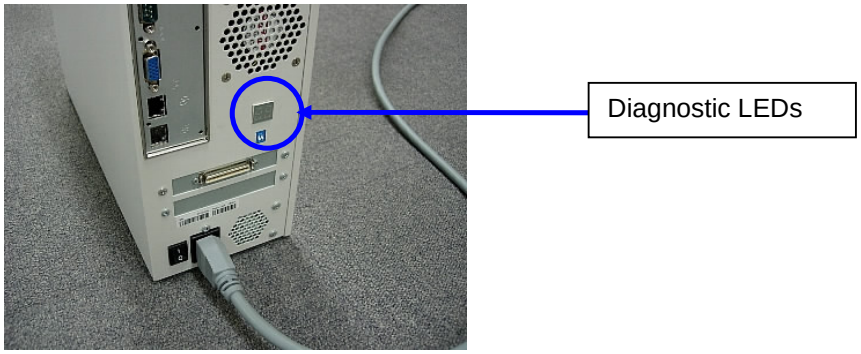

4. Turn off the main power switch of the Color Controller E-7000.

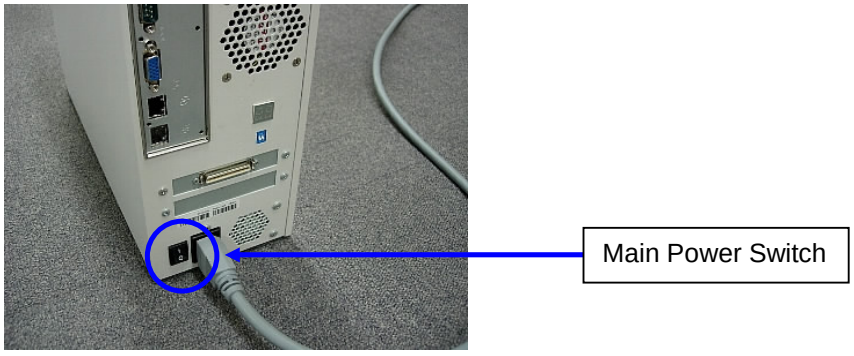

5. Put the firmware SD card into Slot 3 and turn on the e-STUDIO4500c/5500c main power switch.
6. After the firmware update is finished, turn off the e-STUDIO4500c/5500c main power switch and remove the SD card.
7. Turn on the e-STUDIO4500c/5500c main power switch.
8. Turn on the main power switch of the Color Controller E-7000.

Downloaded from www.Manualslib.com manuals search engine

4.4.13 POOR FUSING ON 100g/m^2 PAPER

SYMPTOM:

Part of the image peels off the paper.

NOTE: This symptom is most noticeable under these conditions:

- When solid images are printed onto 100g/m^2 (28lb.) paper in full color mode
- When using a Ricoh PostScript3 printer driver or using Fiery controller

CAUSE:

Not enough heat is supplied to the surface of the fusing roller.

SOLUTION:

Add the "Middle Thickness Paper Mode" by the following action.

Important:

- **Never** change the setting for Sp1105-036 (Hot Roller Wait Temp: Norm, default = 145 deg).
- After you finish the procedure below, turn the machine main power OFF/ON.

Solution: Middle Thickness Paper Mode

1. Power Supply Voltage Check when using before applying the final solution.

Check the Power Supply Voltage during the continuous printing.

SP1108-008 (Htg Roll Lamp2 Norm: FC)
Change to 100 (default: 83)

SP1108-009 (Htg Roll Lamp2 Scan: FC)
Change to 83(default: 66)

Downloaded from www.Manualslib.com manuals search engine

2. Toner Maximum Limitation

If the customer agrees to the toner maximum limitation change, reduce the value as follows:

- For machines that use a Ricoh PS driver:

Set SP1106-001 to a value of 200.

Printer SP Number	Description	Default Settings	Final Solution	NOTE
1106-001	Toner Limit: Photo	260	200	Toner maximum limitation for Photo mode.

- For the Fiery E-7000 controller:
  1. Open the "E-7000 PS Document Properties" dialog.
  2. Click on the “Fiery Printing" tab, then select the "Image Quality" option.
  3. Change the "Toner Reduction" setting to ON.

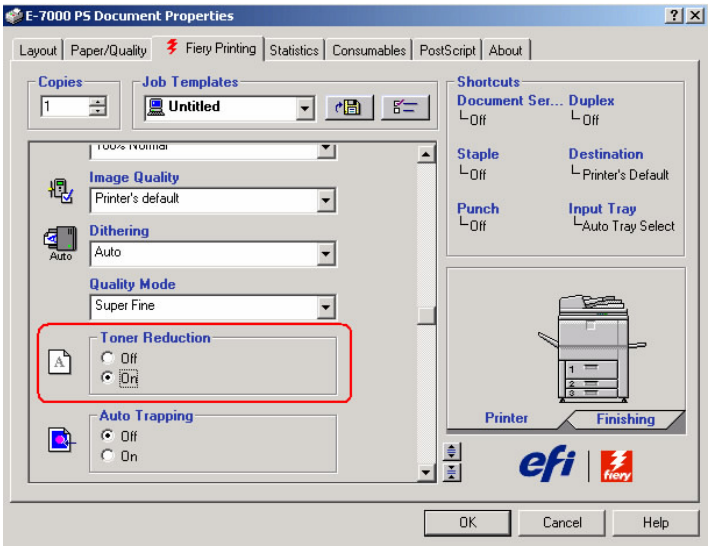

Downloaded from www.Manualslib.com manuals search engine

3. Activate "Middle Thickness Paper Mode"

To activate the "Middle Thickness Paper Mode", change the following SP settings as a set.

1) SP1107-006 (Mode Shift / Feed Norm Temp):
Change to 1 (default: 0)

NOTE: This is to turn ON the "Middle Thickness Paper Mode".

2) SP2307-006 (Set Ptype Link Special Paper):
Change to "0: Normal Paper", then press "OK" button.
(default: "3 Special Paper 1").

NOTE: This is to change the paper transfer conditions to those for Normal Paper.

3) SP1200-006 (1st CPM Down / CPM Norm / Hi: FC):
Change to 40 (default: 30)

NOTE: This is to change the paper feed interval condition for High & Normal Temperature in FC mode.

4) SP1200-008 (1st CPM Down /CPM Low Temp: FC):
Change to 35 (default: 25)

NOTE: This is to change the paper feed interval condition for Low Temperature in FC mode.

4. Select the "Special Paper" for the tray to which you need to apply "Middle Thickness Paper Mode."

User Tools → System Settings → Tray Paper Settings → Paper Type: Tray XX (XX: tray number): Special Paper (default: No display)

NOTE:

- This setting is kept even when the main power switch is turned OFF/ON ("Special" is displayed for the trays which have been set to this mode).
- It can be selected for each paper tray independently.

Downloaded from www.Manualslib.com manuals search engine

5. Select the Paper Thickness Setting to "Normal Paper" for the tray, on which you need to apply "Middle Thickness Paper Mode."

User Tools → System Settings → Tray Paper Settings → Paper Thickness Setting

Then, select "Normal (72-126g/m^2)" for the tray.

6. Change the Fusing Temperature settings according to the type of "Middle Thickness Paper Mode", which is most appropriate for the poor fusing symptom.

1) "Middle Thickness Paper Mode -1" (Default)

NOTE: This setting is effective both for poor fusing and the sponge image/separation pawl streaks. You do NOT have to change any SP settings (Default settings are OK).

a) SP1105-013 (Htg Roll Sn1: Ctr / 1-S: Thk3: FC: NS: CPM)
Default:180.

b) SP1105-021 (Htg Roll Sn1: Ctr / 2-S: Thk3: FC: NS: CPM
Default: 180.

2) "Middle Thickness Paper Mode -2"

NOTE: NOTE: This setting should be selected if the effectiveness of "Middle Thickness Paper Mode-1" is not enough for the poor fusing. However, with this setting, it is easier for separation pawl streaks to occur.

Change the following SP setting as a set.

a) SP1105-013 (Htg Roll Sn1: Ctr / 1-S: Thk3: FC: NS: CPM)
Change to 185 (default: 180)

b) SP1105-021 (Htg Roll Sn1: Ctr / 2-S: Thk3: FC: NS: CPM
Change to 185 (default: 180)

Downloaded from www.Manualslib.com manuals search engine

3) "Middle Thickness Paper Mode -3"

NOTE: This setting should be selected if the effectiveness of "Middle Thickness Paper Mode-2" is still not enough for the poor fusing. However, with this setting, it is easier for separation pawl streaks to occur.

Change the following SP setting as a set.

a) SP1105-013 (Htg Roll Sn1: Ctr / 1-S: Thk3: FC: NS: CPM)
Change to 190 (default: 180)

b) SP1105-021 (Htg Roll Sn1: Ctr / 2-S: Thk3: FC: NS: CPM)
Change to 190 (default: 180)

c) SP1105-021 (Htg Roll Sn1: Ctr / 2-S: Thk3: FC: NS: CPM
Change to 0 (default: 5)

Downloaded from www.Manualslib.com manuals search engine

4.4.14 NIP WIDTH ADJUSTMENT

This chapter shows you how to measure and adjust the nip width.

Important:

If a finisher is installed on the machine, remove it before you begin these procedures.

MEASURING THE NIP WIDTH:

1. Load one OHP sheet ("3M PP2500 Transparency Film") in the bypass tray.

2. Turn OFF "Paper Type Detect " and "Double Feed Detect" for the bypass tray.

3. Make sure the following SP modes are set to their defaults.

   Sp1111-002 (Stop Time) Default: 60

   Sp1111-003 (Stop Interval) Default: 200

4. Do Sp1111-001 (Nip Width Mode – Execute).

Downloaded from www.Manualslib.com manuals search engine

5. Measure the nip width on the OHP sheet and make sure it is within specification.
   NOTE: Note: See Nip Width Specifications below.

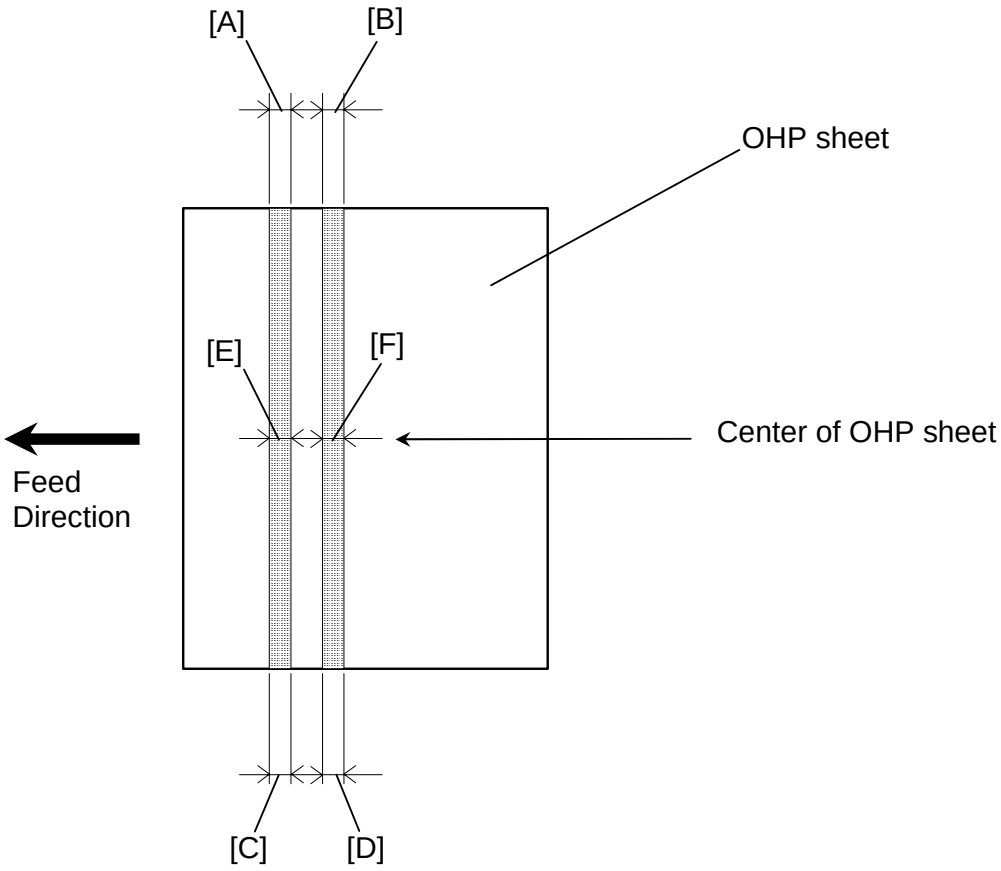

NIP WIDTH SPECIFICATIONS:

All of the following must be true.

1. ([E] + [F]) / 2 = 11.1 +/- 0.3mm
   and
2. The difference between [A] and [C] is 0.5mm or smaller
   and
3. The difference between [B] and [D] is 0.5mm or smaller

Downloaded from www.Manualslib.com manuals search engine

ADJUSTING THE NIP WIDTH:

1. Remove the fusing unit from the copier and place it on the table.

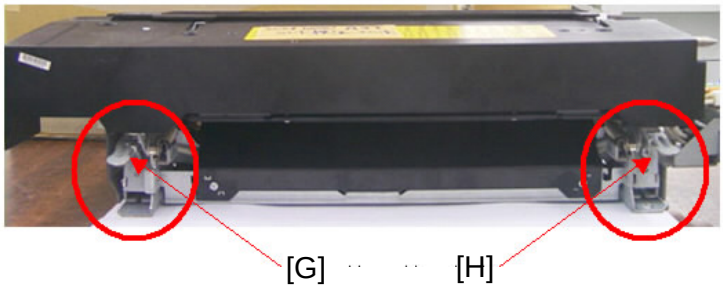

2. Make sure the pressure levers ([I], [J]) are in the upper position as shown in Photo A.
   NOTE: If the levers are not in the upper position, pressure will not be applied between the fusing belt and pressure roller.

Photo A: OK

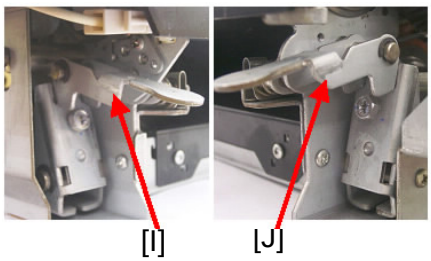

Photo B: NG

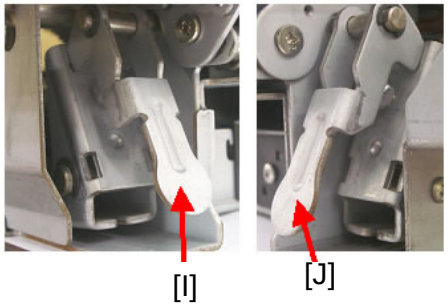

3. Turn screws [G] and [H] to bring the nip width to within specification.
   - To increase the nip width, turn the screws clockwise.
   - To decrease the nip width, turn the screws counter-clockwise.

   NOTE: One turn of the screw changes the nip width about 0.3mm.

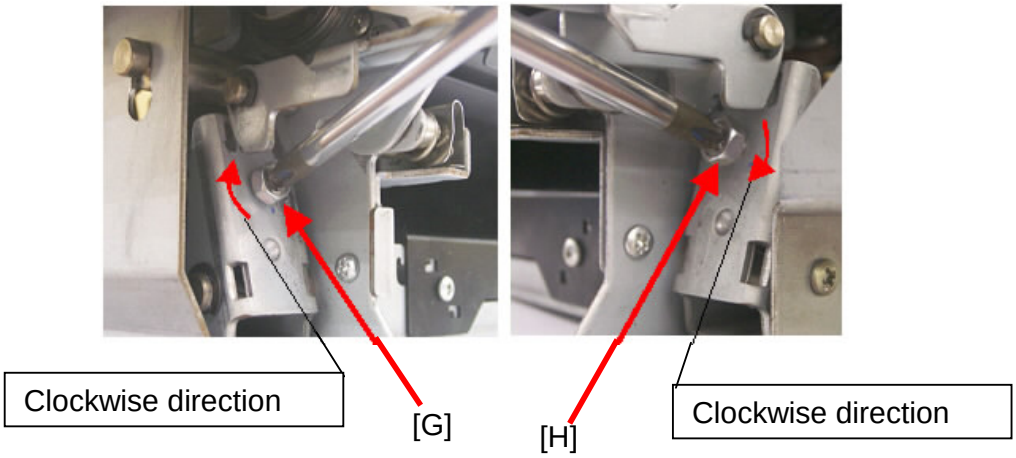

Downloaded from www.Manualslib.com manuals search engine

5. SERVICE TABLES

5.1 SERVICE PROGRAM MODE

5.1.1 SERVICE PROGRAM MODE OPERATION

The service program (SP) mode is used to check electrical data, change modes, and adjust values.

⚠CAUTION

Never turn OFF the main power switch when the power LED is lit or flashing. To avoid damaging the hard disk or memory, press the operation switch to switch the power OFF, wait for the power LED to go OFF, and then switch the main power switch OFF.

Service Mode Lock/Unlock

At locations where the machine contains sensitive data, the service engineer cannot operate the machine until the Administrator turns the service mode lock off. This function makes sure that work on the machine is always done with the permission of the Administrator.

1. If you cannot go into the SP mode, ask the Administrator to log in with the User Tool and then set “Service Mode Lock” to OFF. After he or she logs in:
   [User Tools] > System Settings > Administrator Tools > Service Mode Lock > OFF
   - This unlocks the machine and lets you get access to all the SP codes.
   - The service engineer can do servicing on the machine and turn the machine OFF and ON. It is not necessary to ask the Administrator to log in again each time the machine is turned ON.
2. If you must use the printer bit switches, go into the SP mode and set **SP5169** to “1”.
3. After machine servicing is completed:
   - Change **SP5169** from “1” to “0”.
   - Turn the machine OFF and ON.
   - Tell the administrator that you completed servicing the machine.
   - The administrator will then set the “Service Mode Lock” to ON.

Downloaded from www.Manualslib.com manuals search engine

To Enter and Exit the Service Mode

1. Press the [Clear Modes] ( )key.
2. On the operation panel keypad, press "**107**".
3. Hold down the Clear/Stop ( ) key for more than 3 seconds.
   The Copy SP or PM Counter items are displayed. If the printer/scanner unit (GM-2100) is installed, the Printer SP and Scanner SP items are also displayed. To enter normal Copy SP mode, press “Copy SP”.
4. When you are finished, press “Exit” to exit the SP mode, then press again to return to the Copier Window.

To Switch to the Copy Window for Test Printing

1. In the SP mode display, press "Copy Window" to switch to the copy operation screen when you need to select paper for a test print.
2. Use the copy window (copier mode) to select the appropriate settings (paper size, etc.) for the test print.
3. Press the [Start] ( ) key to execute the test print.
4. Press "SP Mode" (highlighted) to return to the SP mode screen and repeat from step 1.

Using the SP Mode

SP command numbers can be entered directly (if you know the number) or the command can be selected from the menus.

Direct Entry

SP5831 an executable SP that initializes the User Tools settings, can be executed immediately by just entering the numbers.

1. On the keypad press "**5831"**.
2. Press [#] (Enter).
3. Press “Execute” on the touch panel.

If you know all seven digits of the SP code, enter the seven numbers and press Execute.

If you do not know all the numbers, enter only the first four numbers of the seven-digits and press [#]. The display goes immediately to the first SP of that group. Then you can use the buttons to browse to the desired selection.

Downloaded from www.Manualslib.com manuals search engine

Button Selection Entry

1. Refer to the SP Mode Tables in this section to find the SP that you want to adjust.
2. Press the Group number on the left side of the SP Mode window that contains the SP that you want to adjust.
3. Use the scrolling buttons in the center of the SP mode window to display the SP number that you want to open, then press that number to expand the list.
4. Use the center touch-panel buttons to scroll to the number and title of the item that you want to set, and press [#]. The small entry box on the right is activated and displays the default or the current setting below.
5. To enter a setting
   - Press [#] to enter a minus sign. Then use the keypad to enter the appropriate number. The number you enter will write over the previous setting.
   - Press [#] to enter the setting. (If you enter a number that is out of range, the key press is ignored.)
   - When you are prompted to complete the selection, press Yes.
6. If you need to perform a test print, press "Copy Window" to open the copy window and select the settings for the test print. Press the [Start] (◇) key twice, then press "SP Mode" (highlighted) in the copy window to return to the SP mode display.
7. When you are finished, press "Exit" twice to return to the copy window.

Downloaded from www.Manualslib.com manuals search engine

SP Mode Button Summary

Here is a short summary of the touch-panel buttons.

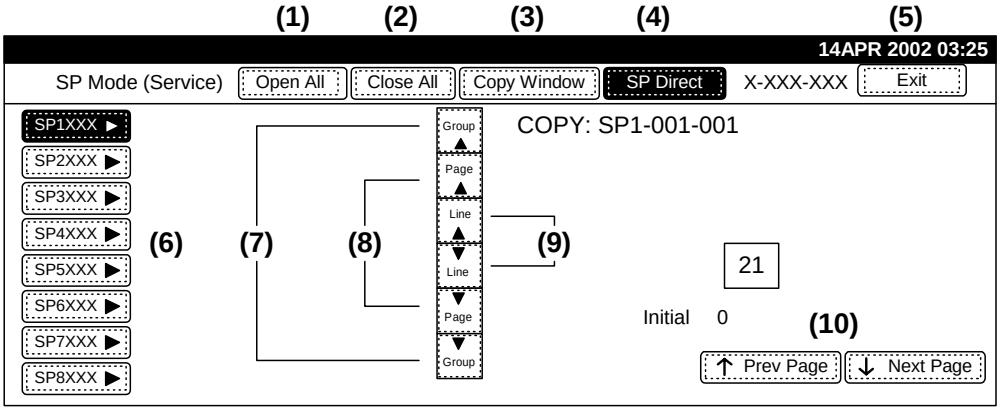

B140S907.WMF

(1): **Open All**.
Opens all SP groups and sublevels.

(2): **Close All**.
Closes all open groups and sublevels and restores the initial SP mode display.

(3): **Copy Window**.
Opens the copy window (copy mode) so you can make test copies. To return to the SP mode screen, press SP Mode (highlighted) in the copy window.

(4): **SP Direct**.
Enter the SP code directly with the number keys if you know the SP number, then press [#]. (SP Direct must be highlighted before you can enter the number. Just press SP Direct if it is not highlighted.)

(5): **Exit**.
Press twice to leave the SP mode and return to the copy window to resume normal operation.

(6): **SPnxxx**.
Press any group number to open a list of SP codes and titles for that group. For example, to open the SP code list for SP1-nnn, press "SP1XXX". If an SP has sublevels, it is marked with a right pointing triangle.

(7): **Group**.
Press to scroll the display to the previous or next group.

(8): **Page**.
Press to scroll to the previous or next display in segments the size of the screen display (page).

(9): **Line**.
Press to scroll the display to the previous or next line, line by line.

(10): **Prev Page** or **Next Page**.
Press to move the highlight on the left to the previous or next selection in the list.

Downloaded from www.Manualslib.com manuals search engine

SP Mode Print (SMC report print)

You can print an SMC Report to check the machine's condition. The SMC Report is a list of the SP commands and their settings.

5990	SP Mode Print (SMC Report Print)
	In the SP mode, press 'Copy Window' to move to the copy screen, select the paper size, then press Start. Select A4/LT (Sideways) or larger to make sure that all the information is printed. Press 'SP Window' to go back to the SP mode, select the necessary SP Print Mode, and press Execute.
001	All (Data List)
002	SP (Mode Data List)
003	User Program
004	Logging Data
005	Diagnostic Report
006	Non-Default (Prints only SPs that are set to values other than defaults.)
007	NIB Summary (Configuration, Systemlog, Nvramlog)
008	Capture Log
021	Copier User Program (Copy Management Report)
022	Scanner SP
023	Scanner User Program (Scanner Management Report)

Downloaded from www.Manualslib.com manuals search engine

5.2 RESETS

5.2.1 MEMORY ALL CLEAR: SP5801

Before shipping, the SP mode data settings are printed in an SMC Report and attached to the exposure glass of the machine for your reference. Store this report in a safe place (next to the toner collection bottle, for example). It is a list of all the SP initial settings. Refer to this list if you need to initialize one or more SPs. The initial SP settings are also written in the SP mode tables at the end of this section.

As a rule, you should always print an SMC Report before initializing or adjusting the SP settings. The SMC Report provides a concise list of all the SP commands and their current settings. The report can be used for reference if the service manual is not available.

Executing Memory All Clear resets all the settings stored in the NVRAM to their default settings except the following:

SP8381	Electrical total counter value
SP5811-002:	Machine serial number
SP5907:	Plug & Play Brand Name and Production Name Setting

1. Execute **SP5990** to print out all SMC Data Lists.
2. Open **SP5801**.
3. Press the number for the item that you want to initialize. The number you select determines which application is initialized. For example, press 1 if you want to initialize all modules.

Downloaded from www.Manualslib.com manuals search engine

No.	What It Initializes	Comments
1	All Clear	Initializes items 2 to 15 below.
2	Engine	Initializes all registration settings for the engine and copy process settings.
3	SCS	Initializes default system settings, SCS (System Control Service) settings, operation display coordinates, and ROM update information.
4	IMH Memory	Initializes the image file system. (IMH: Image Memory Handler)
5	MCS	Initializes the automatic delete time setting for stored documents. (MCS: Memory Control Service)
6	Copier application	Initializes all copier application settings.
7	Fax application	**Not used.**
8	Printer application	Initializes the printer defaults, programs registered, the printer SP bit switches, and the printer CSS counter. **(Not used)**
9	Scanner application	Initializes the defaults for the scanner and all the scanner SP modes.
10	Web Service/ Network application	Deletes the Netfile (NFA) management files and thumbnails, and initializes the Job login ID. Netfiles: Jobs to be printed from the document server using a PC and the DeskTopBinder software
11	NCS	Initializes the system defaults and interface settings (IP addresses also), the SmartNetMonitor for Admin settings, WebStatusMonitor settings, and the TELNET settings. (NCS: Network Control Service)
14	Clear DCS Setting	Initializes the DCS (Delivery Control Service) settings.
15	Clear UCS Setting	Initializes the UCS (User Information Control Service) settings.
16	MIRS Setting	Initializes the MIRS (Machine Information Report Service) settings.
17	CCS	Initializes the CCS (Certification and Charge-control Service) settings.

4. Press "Execute", then follow the prompts on the display to complete the procedure.
5. Make sure that you perform the following settings:
   - Do the printer and scanner registration and magnification adjustments (☛ 3-19-1 to 3-19-3)
   - Do the touch screen calibration (☛ 3-20).
   - Refer to the SMC data lists and re-enter any values which had been changed from their factory settings.
   - Execute **SP3820-001** – Manual Process Control Self Check
6. Check the copy quality and the paper path, and do any necessary adjustments.

Downloaded from www.Manualslib.com manuals search engine

5.2.2 SOFTWARE AND SETTING RESET

Software Reset

The software can be rebooted when the machine hangs up.

To do a software reset:

Turn the main power switch OFF and ON.

-or-

Press and hold down [•/] and [#] together for at least 10 seconds.

When the machine beeps once, release both buttons. After “Now loading. Please wait” is displayed for a few seconds, the copy window will open. The machine is ready for operation.

Resetting the User Tool Settings

The system settings in the UP mode can be reset to their defaults with this procedure.

1. Make sure that the machine is in the copier standby mode.
2. Press the [User Tools] key.
3. Hold down the [#] key and press “System Setting” on the display.
4. A confirmation message will be displayed, then press “Yes”.

Resetting Copy/Document Server Features Only

The copy/document server settings in the UP mode can be reset to their defaults with this procedure.

1. Make sure that the machine is in the copier standby mode.
2. Press the [User Tools] key.
3. Hold down the [#] key and press “Copy/Document Server Features” on the display.
4. When the message appears, press “Yes”.

Resetting Scanner Features Only

The scanner settings in the UP mode can be reset to their defaults with this procedure

1. Make sure that the machine is in the copier standby mode.
2. Press the [User Tools] key.
3. Hold down the [#] key and press “Scanner Features” key.
4. When the message appears, press “Yes”

Downloaded from www.Manualslib.com manuals search engine

5.3 TEST PATTERN PRINTING

5.3.1 PRINTING TEST PATTERN: SP2109 002

Some of these test patterns are used for copy image adjustments but most are used primarily for design testing. These test patterns do not use the IPU.

NOTE: Do not operate the machine until the test pattern is printed out completely. Otherwise, an SC may occur.

1. Enter the SP mode and select **SP2109 002**
2. Enter the number for the test pattern that you want to print and press [#].
3. When you are prompted to confirm your selection, press "Yes" to select the test pattern for printing.
4. Press "Copy Window" to open the copy window, then select the settings for the test print (paper size, etc.)
5. Press the [Start] (◇) key twice (ignore the “Place Original” messages) to start the test print.
6. After checking the test pattern, press SP Mode (highlighted) to return to the SP mode display.
7. Press "Exit" twice to exit the SP mode.

Test Pattern Table

These patterns can be selected with **SP2109 002.**

0	Off	**14**	Horizontal Cross-Stitch
1	1-Dot Line	**15**	Crop Marks
2	1-Dot Slant Cross-Stripe	**16**	Vertical Belt
3	2-Dot Horizontal Line	**17**	Checkered Flag
4	2-Dot Vertical Line	**18**	1-Dot 20 mm Grid
5	1-Dot Horizontal Line	**19**	1-Dot 20 mm Slant Grid
6	1-Dot Vertical Line	**20**	Horizontal Grayscale
7	1-Dot Independent	**21**	Horizontal Grayscale-White Stripes
8	2-Dot Independent		
9	4-Dot Independent		
10	Trim Area		
11	Belt Pattern		
12	100% Coverage		
13	Vertical Cross-Stitch		

Downloaded from www.Manualslib.com manuals search engine

5.3.2 IPU TEST PATTERNS: SP4417

The IPU test patterns are primarily used for design purposes. However, they can be used as follows:

- To confirm that the IPU is processing images correctly.
- To fine tune image processing
- To trace the causes of poor images. For example, if the IPU test patterns are normal when the machine is producing poor quality images, then the problem must be after the IPU if the flow of image processing.

1. Enter the SP mode, select **SP4417**.
2. Scroll then select the number of the test pattern that you want to print.
3. Press [#].
4. Press "Copy Window" to open the copy window, then select the settings for the test print (paper size, etc.)
5. Press the [Start] (◇) key to start the test print.
6. Press "SP Mode" (highlighted) to return to the SP mode display.

Here is a list of the text patterns you can select.

0	Scanned Image	**13**	Grid Pattern CMYK
1	Gradation Main Scan A	**14**	Color Patch CMYK
2	Gradation Main Scan B	**15**	Gray Pattern (1)
3	Gradation Main Scan C	**16**	Gray Pattern (2)
4	Gradation Main Scan D	**17**	Gray Pattern (3)
5	Gradation Sub Scan (1)	**18**	Shading Pattern
6	Grid Pattern	**19**	Thin Line Pattern
7	Slant Grid Pattern	**20**	Scanned + Grid Pattern
8	Gradation RGBCMYK	**21**	Scanned +Gray Scale
9	UCR Pattern	**22**	Scanned + Color Patch
10	Color Patch 16 (1)	**23**	Scanned + Slant Grid C
11	Color Patch 16 (2)	**24**	Scanned + Grid D
12	Color Patch 64		

Downloaded from www.Manualslib.com manuals search engine

5.4 FIRMWARE UPDATE

5.4.1 FIRMWARE UPDATE PROCEDURE

SD cards are used to update the software and to back up important data. Here is a list of the firmware modules that can be updated or restored from an SD card:

- GW controller software
- BICU software
- LCDC (operation panel) software
- Network Sys (network) software
- Web Sys (Web Image Monitor)
- Document Server software
- NFA (Net File) software
- Printer application software
- Scanner application software
- DESS (encryption module) software

Important: Always obey these rules when handling and using SD cards:

- Never connect or remove an SD card with the machine powered ON.
- Never turn the power OFF while the machine is downloading data from an SD card.
- The SD card is a precision item. Use it carefully. Do not keep the card in a location where there is high temperature, high humidity, or light from the sun.
- Never bend an SD card, make scratches on it, or apply strong shock or vibration to it.

Downloaded from www.Manualslib.com manuals search engine

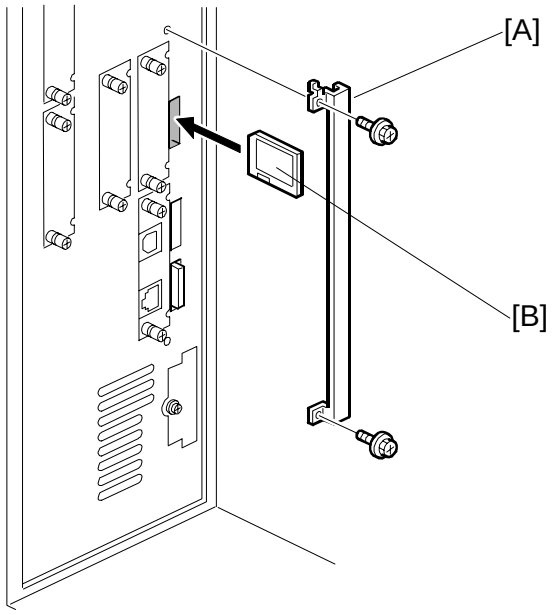

B132S801.WMF

Firmware Update Procedure

1. Disconnect these items if they are installed:
   - Network cable
   - Interface cable

   NOTE: This prevents outside interference from data transfers to the machine while the software is being uploaded.
2. Obtain the System SD card (P/N B1325730).
3. Turn the main switch OFF.
4. Remove the SD card slot cover [A] from the controller (x2).
5. Hold the SD card [B] (the surface with printing must be away from the front of the machine), and insert the SD card in **Slot 3** [B].
6. Open the front door of the copier.
7. Turn the main power switch ON. You see "Please Wait.

   NOTE: Opening the front door during the firmware update prevents motor rotation and the generation of any electrical noise.

   The first screen appears after about 10 sec.

Downloaded from www.Manualslib.com manuals search engine

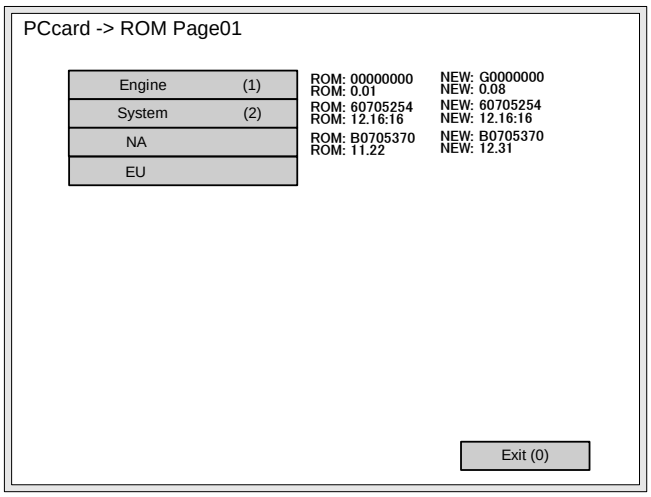

B132S901.WMF

Using the Screen:

- To select the item for upgrade, press the selection on the touch panel, or press the corresponding key on the 10-key pad (1 to 5) of the operation panel. The number in parentheses tells you which key to press. When you make a selection, the [Verify(./)] and [Update(#)] buttons come on the screen.
- If you press [Exit] (or the [0] key), you go back to the usual operation screen.
- Press the [Start] key on the operation panel to select and download all the options shown on the screen.
- Press the [Clear] key on the operation panel if you want to cancel your selections and make new ones.

While the Update Is in Progress…

- Remain with the machine. Do not leave it unattended.
- The [Start] key flashes RED during firmware update, and then lights GREEN when the update is finished.
- Never switch the machine OFF while the [Start] key is flashing RED. If the machine is switched OFF or accidentally unplugged before the update is finished, do not remove the SD card. Just switch the machine on again. The firmware update should restart automatically. If the firmware update does not recover, order another System SD card (P/N B1325730).
- Never close the front door during firmware update.

Downloaded from www.Manualslib.com manuals search engine

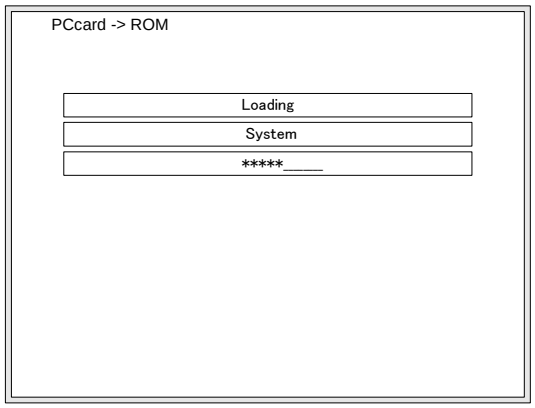

B132S903.WMF

8. Check the notations to the right.
   - "ROM" tells you the module number and version of the currently installed software.
   - "NEW" tells you the module number and version of software on the SD card in Slot 3.
9. Press the names of the items on the left that you want to update (Engine, System, or Operation Panel). The items you select change to dark gray.

   Recommended: If you intend to update all the modules, select "Engine" and "System" for the first update. After this is completed, do the "Opeation Panel" update. (The screen goes off during the operation panel update. If a problem occurs, you will not be aware of it.)
10. Press "Update" or press [#] on the 10-key pad.

    Here is what happens on the screen:
    - The top bar tells you what the machine is doing ("Loading")
    - The middle bar shows the name of the module that the machine is presently updating. (The example above shows that the machine is updating the “Printer” module.)
    - The bottom bar is a progress bar. The ‘_’ marks in the progress bar are replaced by ‘’ marks as uploading progresses.
    - When the update is completed, you will see the message "Update done."
    - Immediately below the message you will see the name of the SD card and a notation for the number of cards ("1/1", "1/2")

Downloaded from www.Manualslib.com manuals search engine

NOTE: During operation panel update the screen is blank and the progress bar is not displayed. To monitor the progress of the operation panel update watch the [Start] key. While opeation panel update is in progress, the [Start] key LED flashes RED. The [Start] key lights GREEN when the operation panel update has completed.

11. Turn the power OFF and ON.
12. Remove the SD card.

    This completes the update procedure, but you should do the next procedure to verify that the update was successful.

Verifying the Firmware Update

This “Verify” procedure is not necessary but is strongly recommended.

1. Open the front door of the copier.
2. With the System SD card in **Slot 3**, turn the main power switch ON. You see "Please Wait" and then the door-open alert. The first screen appears after about 10 sec.
3. Press "Firmware".
4. Select the items that you updated, and then press the [Verify] button.
5. If there are no errors the machine displays the "Verify done" message for each updated item. Go to the next step.

   -or-

   If you see “Verify Error” in the first bar on the screen, then you must do the procedure again for the module shown in the bottom bar. For more details, see "Errors During Firmware Update" below.
6. After the firmware is correctly updated, turn the main power switch OFF.
7. Push the System SD card in a small distance to release it, then pull it out of the slot.
8. Turn the main power switch ON, and confirm that the machine operates correctly.

Downloaded from www.Manualslib.com manuals search engine

Errors During Firmware Update

If an error occurs during a download, an error message will be shown in the first line. The error code consists of the letter “E” and a number (“E20”, for example).

Error Message Table

NO.	MEANING	SOLUTION
20	Cannot map logical address	Make sure the SD card is installed correctly, or use a different SD card.
21	Cannot access memory	HDD connection not correct, or replace hard disk.
22	Cannot decompress compressed data	The ROM data on the SD card is not correct, or data is damaged.
23	Error occurred when ROM update program started	Controller program defective. If the second attempt fails, replace the controller board.
24	SD card access error	Make sure the SD card is installed correctly, or use a different SD card.
30	No HDD available for stamp data download	HDD connection not correct or replace hard disks.
31	Data incorrect for continuous download	Install the SD card with the remaining data necessary for the download, then re-start the procedure.
32	Data incorrect after download interrupted	Do the recovery procedure for the module, then repeat the installation procedure.
33	Incorrect SD card version	The ROM data on the SD card is not correct, or data is damaged.
34	Module mismatch - Correct module is not on the SD card	The data on the SD is not correct. Get the correct data (Japan, Overseas, OEM, etc.) then install again.
35	Module mismatch – Module on SD card is not for this machine	SD update data is not correct. The data on the SD card is for a different machine. Get the correct data then install again.
36	Cannot write module – Cause other than E34, E35	SD update data is not correct. The data on the SD card is for a different machine. Get the correct data then install again.
40	Engine module download failed	Replace the data for the module on the SD card and try again, or replace the BICU board.
42	Operation panel module download failed	Replace the data for the module on the SD card and try again, or replace the LCDC.
43	Stamp data module download failed	Replace the data for the module on the SD card and try again, or replace the hard disk.
44	Controller module download failed	Replace the data for the module on the SD card and tray again, or replace the controller board.
50	Electronic confirmation check failed	SD update data is not correct. The data on the SD card is for a different machine. Get the correct data then install again.

Downloaded from www.Manualslib.com manuals search engine

5.4.2 DOWNLOADING STAMP DATA

You must download the fixed stamp data from the machine ROM onto the hard disk after the HDD has been formatted or has been replaced and formatted. Then these stamps can be used by the system. If this is not done, the user will not have access to the fixed stamps (“Confidential”, “Secret”, etc.).

1. Go into the SP mode.
1. Select **SP5853** then press “Execute”.
2. Obey the instructions on the screen to complete the procedure.
3. Switch the machine OFF and remove the SD card.

Downloaded from www.Manualslib.com manuals search engine

5.4.3 UPLOADING AND DOWNLOADING NVRAM DATA

Uploading NVRAM Data to an SD card

Always upload the NVRAM data to an SD card before you repolace the NVRAM.

1. Before you turn the machine OFF, do **SP5990 001** (SMC Report Print). This gives you a record of the NVRAM settings if the upload fails and tells you the serial number of the machine.
2. Turn the copier main power switch OFF.
3. Put the SD card into Slot 3, then turn the copier ON.
4. Do **SP5824 001** then press the “Execute” key

   When uploading is completed, a file is coped to the NVRAM folder on the SD card. The file is saved to this path and filename:

   NVRAM\<serial number>.NV

   Here is an example for Serial Number “B0700017”:

   NVRAM\B0700017.NV

5. To prevent an error during the download, write the serial number of the machine on the SD card.

Downloaded from www.Manualslib.com manuals search engine

Downloading an SD Card to NVRAM

Do this procedure to take the data uploaded from the NVRAM and download it to the new NVRAM.

- If the SD card with the NVRAM data is damaged, or if the connection between the controller and BICU is defective, the NVRAM data download will not complete correctly.
- If the download does not complete correctly, do the download procedure again.
- If this does not complete correctly, input the NVRAM data manually from the SMC report print that you made before you uploaded the NVRAM data.

1. Turn the copier main power switch OFF.
2. Put the SD card with the NVRAM data into **Slot 3**.
3. Open the front door of the copier and keep it open.
4. Turn the copier main power switch ON.

   If the NVRAM is new, SC195 (Machine Serial Number Error) may appear. If this occurs:

   - Enter the SP mode and do SP5801 001 to set the memory to the defaults (All).
   - Switch the machine OFF/ON and start from Step 1.

   Important! WHEN SC195 OCCURS, THE SERIAL NUMBER MUST BE INPUT. PLEASE CONTACT YOUR TECHNICAL SUPERVISOR.

5. Do **SP5825-001** (NVRAM Data Download) and press the “Execute” key.
   NOTE: The serial number of the file on the SD card must match the serial number of the machine. If the serial numbers do not match, the download will not complete correctly.
6. Turn the copier main power switch OFF and close the front door.
7. Remove the SD card from **Slot 3**.

Important: This procedure does not download the following data to the NVRAM:

- Total Count
- Copies per Original Count

Downloaded from www.Manualslib.com manuals search engine

5.5 SERVICE PROGRAM TABLES

5.5.1 SERVICE TABLE KEY

Notation	What it means
[range/step]	Example: [–9 to +9/0.1 mm] The default setting can be adjusted in 0.1mm steps in the range ±9. **Note**: The default setting for each SP mode is shown on the screen in the "Initial" box immediately below the entry box.
DFU	Denotes "Design or Factory Use". Do not change this value.
Japan only	The feature or item is for Japan only. Do not change this value.
LEF	Long Edge Feed
SEF	Short Edge Feed

Downloaded from www.Manualslib.com manuals search engine

Abbreviations for e-STUDIO4500c/5500c SP Service Tables

The SP titles are abbreviated so they can be used in smaller the 2-line displays of future printer models. Refer to this list if you do not understand the meaning of an abbreviation.

Code	Meaning	Code	Meaning	Code	Meaning
1/3S	One-third Speed	**HS**	Half Speed	**Recov**	Recovery
1C	One Color	**Htg**	Htg	**Reg**	Registration
1Op	1 Operation (execution cycle)	**Htg Roll**	Heating Roller	**Reps**	Repetitions
1-S	1-Side (Simplex)	**I/O**	Input/Output	**Rev**	Reverse
2-S	2-Side (Duplex)	**Init**	Initial power ON	**Roll**	Roller
Abs	Absolute	**Int**	Interval	**Rot**	Rotation
Adj	Adjustment	**IntCnt**	Interval Count	**s**	seconds
Agi	Agitation	**Inv**	Inverter	**S**	Sideways (LEF)
Amt	Amount	**ITR**	Image Transfer	**SApli**	Scanner Application
B/W	Black-and-White (2-Color)	**JG**	Junction Gate	**Sep**	Separation
BotPlt	Bottom Plate (Tray)	**K**	Black, BK	**Shts**	Sheets
C	Cyan	**L**	Lengthways (SEF)	**Sn**	Sensor
Calib	Calibration	**LEdge**	Leading Edge	**Sp1**	Special Paper 1
Chg	Change	**LL**	Lowest (Low Low)	**SS**	Saddle-Stitch
Chk	Check	**Lvl**	Level	**Std**	Standard
Chrg	Charge	**M**	Motor	**Stp**	Staple
Cir.	Circulation	**M**	Magenta	**StrTemp**	Start Temperature
Cnt	Count	**Meas**	Measurement	**Sub**	Sub Hopper
Coeff	Coefficient	**Mem**	Memory	**SWT**	Switch Timing
Col	Color	**MH**	Medium High	**Syn**	Synchronization
Cont	Continuous Operation	**ML**	Medium Low	**T1**	Tray 1
Cor	Correction	**MM**	Medium (Medium Medium)	**T2**	Tray 2
Ctrl	Control	**Norm**	Normal Paper	**T3**	Tray 3
Den	Density	**NS**	Normal Speed	**T4**	Tray 4
Dev	Development	**Opt.**	Optical	**Tan**	Tandem
Devr	Developer	**Patt**	Pattern	**TC**	Toner Control
Disp	Display	**PE**	Paper End	**TE**	Toner End
Dupx	Duplex	**Pgs**	Pages	**TE Sn**	Toner End Sensor
EMargin	Erase Margin	**Photo**	Pht	**TEdge**	Trailing Edge
EngSave	Energy Save	**PM**	Pulse Modulation	**Temp**	Temperature
Ent	Entrance	**PolyM**	Polygon Motor	**Temp Chg**	Temperature Change
Env	Environment	**Pos**	Position	**Thk**	Thick (Paper)
Err	Error	**Poten**	Potential	**Thresh**	Threshold
Exe	Execute	**PPr**	Photo Paper	**Tmg**	Timing
FC	Full Color	**Press**	Pressure	**TNE**	Toner Near End
Fin1	SR970 (B701) and SR4000 (B700)	**Prior**	Priority	**Tnr**	Toner
Fin2	SR842 (B706)	**Prmr**	Parameter	**Tnr M**	Toner Motor
Fin3	- (Japan only)	**ProCon**	Process Control	**Tra**	Trace (thin) Paper
Fwd	Forward	**Pt**	Point	**TxtOCR**	Text (OCR)
Gray	Grayscale	**PT**	Paper Transfer	**TxtPrt**	Text (Print)
Haf	Half Speed	**PTR**	Paper Transfer Roller	**Usd Tnr**	Used (Waste) Toners
Height	Hgt	**Ptype**	Paper Type	**Vert**	Vertical
HH	Highest (High High)	**Pwr**	Power	**Y**	Yellow

Downloaded from www.Manualslib.com manuals search engine

5.5.2 COPIER SERVICE TABLES

Group 1000

1001	Lead Edge Reg	Leading Edge Regisration Adjustment
001	Adjusts the printing leading edge registration using the trimming area pattern (SP2109, Pattern No. 10). [–9~+9/0.1mm] Specification: 3±2mm	

1002	Side-to-Side Reg	Side-to-Side Registration Adjustment
	Adjusts printing side-to-side registration for each feed station, using the test pattern (SP2109, Pattern No. 10). These SP's should be adjusted after replacing the laser synchronization detector or the laser optical unit.	
001	Tray 1	[–9~+9/0.1 mm]
002	Tray 2	
003	Tray 3	
004	Tray 4	**Japan Only**
005	Bypass Tray	
006	LCT	
007	Dupx Tray	

1003	Reg Buckle Adj	Registration Buckle Adjustment
	Adjusts the registration motor timing. This timing determines the amount of paper buckle at registration. (A higher setting causes more buckling.)	
001	Trays & LCT	[–9~+9/1 mm]
002	Dupx Tray	[–9~+9/1 mm]
003	Bypass Tray	[–9~+9/1 mm]

1007	Bypass Size Disp	Bypass Paper Size Detection Display
	Use this SP to display and confirm the size of the paper detected in the bypass tray if paper is skewing during feeding. [0~255/1 mm]	

1008	Duplex Fence Adj	Duplex Side Fence Position Adjustment
	Allows fine adjustment of the distance between the edges of the sheet and the jogger fences when the fences come together to position the sheet in the duplex unit. [-3~+3/0.1 mm]	

Downloaded from www.Manualslib.com manuals search engine

1009	**Fine Adj Reg Spd**	Fine Adjust Registration Line Speed
	The SP allows fine adjustment fine adjustment of the registration roller speed to adjust the line speed.	
001	Reg. Roller	Registration Roller: Fine Adjust Speed Allows fine adjustment of the registration roller line speed. [-3~+3/0.1%]
	Motor Adj:Norm	**Motor Speed Fine Adjustment (Normal)**
002	Drum Motor:K	"Normal" is normal speed for copying. [-3 ~ +3/ 0.1%]
003	Drum Motor:M	
004	Drum Motor:C	
005	Drum Motor: K	
006	PCU Motor:K	
007	PCU Motor:M	
008	PCU Motor:C	
009	PCU Motor:Y	
010	Image Transfer Motor	
011	PTR Motor	
012	Fusing Motor	[-5 ~ +5/ 0.1%]
	Motor Adj:Half	**Motor Speed Fine Adjustment (Half-Speed)**
013	Drum Motor:K	"Half-Speed" is the half-speed mode. [-3 ~ +3/ 0.1%]
014	Drum Motor:M	
015	Drum Motor:C	
016	Drum Motor:Y	
017	PCU Motor:K	
018	PCU Motor:M	
019	PCU Motor:C	
020	PCU Motor:Y	
021	Image Transfer Motor	
022	PTR Motor	
023	Fusing Motor	
	Motor Adj: 1/3	**Motor Speed Fine Adjustment (One-Third Speed)**
024	Fusing Exit Motor	"One-Third Speed" is the one-third speed mode. The one-third speed mode is used when OHP goes through the fusing unit. [-5 ~ +5/ 0.1%]
		Registration Roller Speed
025	Reg. Roller	This SP allows fine adjustment of the registration roller speed. [-3 ~ +3/ 0.1%]

Downloaded from www.Manualslib.com manuals search engine

1105	**Htg Roll Sn1:Ctr**	Heating Roller: Sensor 1 (Center)
	Heating Roller	**Heating Roller** SP codes 001 to 027 control the temperature of the heating roller.
001	Prefeed Temp	Free-rotation start time. [60~200/1 deg.]
002	Reload Temp	At normal standby temperature. [130~200/1 deg.]
003	Wait Temp:Norm	At normal standby temperature. [50~200/1 deg.]
004	Wait Temp:Low	At low standby temperature. [50~200/1 deg.]
005	Wait Temp:High	At high standby temperature. [50~200/1 deg.]
006	1-S Norm:1Col	During copying. [130~20/1 deg.]
007	1-S:Norm :FC	During copying. [130~200/1 deg.]
008	1-S:Trace:1C	During copying. [130~200/1 deg.]
009	1-S:Trace:FC	During copying. [130~200/1 deg.]
010	1-S:Thk1:1C:HS	During copying in half-speed mode. [130~200/1 deg.]
011	1-S:Thk1:FC:HS	During copying in half-speed mode. [130~200/1 deg.]
012	1-S:Thk3:1C:NS:CPM	During copying in normal speed mode on thick paper in black-and-white. [130~200/1 deg.]
013	1-S:Thk3:FC:NS:CPM	During copying in normal speed mode on thick paper in full color. [130~200/1 deg.]
014	2-S:Norm:1C	During normal speed copying. [130~200/1 deg.]
015	2-S:Norm:FC	During normal speed copying. [130~200/1 deg.]
016	2-S:Trace:1C	During normal speed copying (paper setting). [130~200/1 deg.]
017	2-S:Trace:FC	During normal speed coyping (paper setting). [130~200/1 deg.]
018	2-S:Thk1:1C:HS	During half-speed copying (paper setting). [130~200/1 deg.]
019	2-S:Thk1:FC:HS	During half-speed copying (paper setting) [130~200/1 deg.]
020	2-S:Thk3:1C:NS:CPM	During half-speed copying (paper setting) [130~200/1 deg.]
021	2-S:Thk3:FC:NS:CPM	During half-speed copying (paper setting) [130~200/1 deg.]

Downloaded from www.Manualslib.com manuals search engine

022	Thk2:1C:HS	During half-speed copying (paper setting). [130~200/1 deg.]
023	Thk2:FC:HS	During half-speed copying (paper setting). [130~200/1 deg.]
024	Cont OHP:1C	During half-speed copying (paper setting). [130~200/1 deg.]
025	Cont OHO:FC	During half-speed copying (paper setting). [130~200/1 deg.]
026	OHP:1C:100mm/s	During 100 mm/s copying (paper setting). [130~200/1 deg.]
027	OHP:FC:100mm/s	During 100 mm/s copying (paper setting). [130~200/1 deg.]
	PressRoll	**Pressure Roller**
028	Reload Temp	Until warmup (reload) ends. [70~180/1 deg.]
029	Wait Temp:Norm	At normal standby temperature. [50~180/1 deg.]
030	Wait:Temp:Low	At low standby temperature. [50~180/1 deg.]
031	Wait:Temp:High	At hight standby temperature. [50~180/1 deg.]
032	1-S Norm	Target temperature. [70~180/1 deg.]
033	2-S Norm	Target temperature. [70~180/1 deg.]
034	Cont OHP	During continuous OHP copying. [130~200/1 deg.]
035	SemiT OHP:100mm/s	Target temperature (paper setting). [70~180/1 deg.]
	HotRoll	**Hot Roller**
036	Wait Temp: Norm	Normal standby temperature. [50~170/1 deg.]
037	Wait Temp: Low	Low standby temperature. [50~170/1 deg.]
038	Wait Temp: High	High standby temperature. [50~170/1 deg.]

Downloaded from www.Manualslib.com manuals search engine

1106	**Fusing Temp Disp**	Fusing Lamp Control Method/Temperature Display
	These SP codes control the temperature control of the hot roller and display the temperatures of the hot roller, pressure roller, heating roller, and heating roller lamps.	
001	Temp Ctrl On/Off	Hot roller fusing lamp control switch 0: OFF, **1: PID**
002	Phase Ctrl On/Off	Hot roller phase control **0:OFF** 1:ON
003	Htg Roll Ctr Temp	Displays the temperature in centigrade of the fusing lamp (center) in the heating roller. Range: 0 to 230
004	Htg Roll End Temp	Displays the temperature in centigrade of the fusing lamp (ends) in the heating roller. Range: 0 to 230
005	Press Roll Temp	Displays the temperature in centigrade of the pressure roller. Range: 0 to 230
006	Hot Roll Temp	Displays the temperature in centigrade of the hot roller. Range: 0 to 230

1107	**Mode Shift Setting**	Mode Shift Setting
001	Low Temp SW	The calculated value for the specified temperatures when the readings of the environmental sensors are low. [0~20/1 deg.]
002	High Temp SW	The calculated value for the specified temperatures when the readings of the environmental sensors are high. [-20~0/1 deg.]
003	Pres Roll Reload	* This function in not used in this model.
004	Idle Temp On/Off	The hot roller temperature that determines whether the fusing unit rollers are rotated freely during warmup. [80~200/1 deg.]
005	Idle Time:Extend	The length of time the fusing/exit motor remains on after the fusing unit has reached the warmup temperature. [0~10/1 min.]
006	Feed Norm Temp	Determines whether fusing exit motor remains before feeding plain paper after warmup temperature for the heating roller has been reached. **0: No** 1: Yes
007	Press Temp:Norm	The temperature calculated for the specified temperature when the fusing/exit motor starts to rotate when plain paper starts to feed. [0~20/1 deg.]
008	Press Time:Norm	The time calculated to be added to the rotation time of the fusing/exit motor at the start of plain paper feed, based on the temperature specified temperature. [0~60/1 deg.]
009	Fuse Exit M Cycles	The cycles of the fusing/exit motor at standby. [10~240/1 min.]
010	Fuse Exit M Rot	The time the fusing exit motor rotates at standby. [0~1/1 sec.]

Downloaded from www.Manualslib.com manuals search engine

011	Fuse Exit Temp	The temperature used to calculate the temperature specified for the hot roller at the end of fusing/exit motor rotation when the warmup temperature has been reached. [0~30/1 deg.]
012	Add Rot Time	The amount of time added to the rotation time of the fusing/exit motor after warmup temperture has been reached, based on the temperature specified for the hot roller at standby. [0~90/10 sec.]
	Stand Cool On/Off	**Standby Ventilation Cooling: On/Off**
013	Thk2 (0:Off 1:On)	Switches ON/OFF standby for cooling after printing thick paper. **0: Off** 1: On
	To Cooling Mode	**Standby Ventilation Cooling: Setting**
014	Thk2/OHP Cool End	Sets the temperature to end the cool down period after printing with thick paper or OHP. [0~40/1 deg.]
015	Trace Cool End	Sets the temperature to end the cool down period after printing with tracing (thin) paper. [0~40/1 deg.]
	Edge Cool On/Off	**Standby Ventilation Cooling: On/Off High Edge Temp.**
016	Start (0:No 1:Yes)	Switches ON/OFF standby for cooling for the ends of the fusing rollers after printing on wide paper. **0: Off** 1: On

Downloaded from www.Manualslib.com manuals search engine

1108	**Htg Roll Lamp 1**	Heating Roller: Fusing Lamps
	Controls the level of the power (percentage) supplied to the heating rollers (Watts) when the machine is in the specified mode. At Reload — During warmup after the machine is switched or returns from and energy save mode. Wait Time — While the machine is in the standby mode and ready for operation. Norm:1C — Normal operation for black-and-white copying and printing. Norm:FC — Normal operation for full color copying and printing Scan:Norm:1C — Black-and-white scanning. Scan:Norm:FC — Full color scanning. At ProCon Reload — Reload temperature after completing the process control cycle.	
	Heating Roller: Fusing Lamp 1	
001	At Reload	[0~100 / **100** /0.1%]
002	Wait Time	
003	Norm:1C	
004	Norm:FC	
	Heating Roller: Fusing Lamp 2	
005	Wait Time	[0~1000 /0.1%]
006	Norm:1C	[0~1000 / **1000** /0.1%]
007	Scan:Norm:1C	[0~100 /0.1%]
008	Norm:FC	
009	Scan:Norm:FC	[0~1000 /0.1%]
	Pressure Roller Fusing Lamp	
010	At Reload	[0~100 / **100** /0.1%]
011	At ProCon Reload	[0~100 /0.1%]
012	Wait Time	[0~100 / **100** /0.1%]
013	Norm:1C	
014	Norm:FC	
	Hot Roller Fusing Lamp	
015	At Reload	[0~100 / **100** /0.1%]
016	Wait Time	
	Heating Roller: Fusing Lamp 2	
017	At Reload	[0~100 / **100** /0.1%]

Downloaded from www.Manualslib.com manuals search engine

1110	Paper Type Selet	Paper Type Select
	These SP settings switch the ON/OFF the paper type type detection and double-feed functions. [0~1/1] 0: Enable 1: Disable Two sensors, one mounted above and one below the paper at the registration rollers, detect the opacity of the first sheet and compares this reading for every subsequent sheet. If the reading is higher (thicker paper) or lower (thinner paper) the sensor triggers an error.	
	Paper Type	
001	Tray 1	
002	Tray 2	
003	Tray 3	
004	Tray 4	**Japan Only**
005	Bypass	
006	LCT	
	Double-Feed	
007	Tray 1	
008	Tray 2	
009	Tray 3	
010	Tray 4	**Japan Only**
011	Bypass	
002	LCT	

1111	**Nip Width Mode**	Nip Width Measurement Setting Mode
001	Execute	Determines whether the nip at the hot roller and pressure roller is calibrated. Press [Execute].
002	Stop Time	Determines the down time of the fusing/exit motor in the fusing nip band calibration mode. [1~100/1 sec.]
003	Stop Interval	Determines the intervals between the down times of the fusing/exit motor in the nip band calibration mode. [0~2000/100 msec.]

1112	**Fuser Unit In/Out**	Fusing Unit: In/Out – Start Fusing Unit
	Determines whether the fusing unit operates during the copy cycle for image creation and paper feed. 0:OFF, **1:ON**	

Downloaded from www.Manualslib.com manuals search engine

1200	1st CMP Down	
	This SP adjusts the temperature of the heating roller at the start of the CMP down modes for black-and-white copying in normal/high temperature environments.	
	1st CPM Down	**1st CMP Down (Heating Roller Temperature)**
001	StrTemp:Low/Hi:1C	Normal temperature, high temperature environment [–20~0/1 deg.]
002	StrTemp:Low/Hi:FC	
003	StrTemp:Low:1C	Low temperature environment [–20~0/1 deg.]
004	StrTemp:Low:FC	
005	CPM Norm/Hi:1C	Normal, high temperature environment, A4 SEF [10~60/5 cpm]
006	CPM Norm/Hi:FC	Normal, high temperature environment, A4 SEF [10~60/5 cpm]
007	CPM Low Temp:1C	Low temperature environment, A4 SEF [10~60/5 cpm]
008	CPM Low Temp:FC	Low temperature environment, A4 SEF [10~60/5 cpm]
	2nd CPM Down	**2nd CPM Down**
009	CPM Norm/Hi:1C	Normal, high temperature environment, A4 SEF [10~60/5 cpm]
010	CPM Norm/Hi:FC	Normal, high temperature environment, A4 SEF [10~60/5 cpm]
011	CPM Low:1C	Low temperature environment, A4 SEF [10~60/5 cpm]
012	CPM Low:FC	Low temperature environment, A4 SEF [10~60/5 cpm]
	3rd CPM Down:Thk	**3rd CPM Down: Thick Paper**
013	1C:60/45/30cpm	CPM down settings (based on A4 SEF) for black and white. [0~4/1] **0**: 60 cpm 1: 50 cpm 2: 45 cpm 3: 30 cpm
014	FC:45/25/15cpm	CPM down settings (based on A4 SEF) for full color. [0~4/1] 0: 60 cpm (This function is not use in this model.) 1: 50 cpm 2: 45 cpm 3: 30 cpm
015	(0:Yes 1:No)	Switches the CPM down feature ON/OFF **0:OFF** 1:ON

1201	HtgRoll L2:Hys	Heating Roller 2: Hysterisis On/Off
	This SP adjusts the control temperature of the heating roller when Lamp 2 in the heating roller is switched ON.	
001	On	[-5.0~+5.0/0.5] **Note**: Every “0.1” increment adjusts temperature “0.1 deg.”
002	Off	Switches OFF Lamp 2, no adjust allowed.

Downloaded from www.Manualslib.com manuals search engine

1202	**Set Fusing Temp**	Set Fusing Temperature (for shift to low power mode)
	This SP sets the time interval for the machine to remain idle to trigger lower power mode 1.	
	Set Fusing Temp	
001	EngSave Time 1	[0~60/1 min.]
002	EngSave Time 2	[0~90/5 min.]
003	EngSave Time 3	[0~24/0.5 hour]
	Heating Roller	
004	Energy Save 1	[-200~0/1 deg.]
005	Energy Save 2	[-200~0/1 deg.]
006	Energy Save 3	[-200~0/1 deg.]
	Pressure Roller	
007	Energy Save 1	[-200~0/1 deg.]
008	Energy Save 2	[-200~0/1 deg.]
009	Energy Save 3	[-200~0/1 deg.]
	Hot Roller	
010	Energy Save 1	[-200~0/1 deg.]
011	Energy Save 2	[-200~0/1 deg.]
012	Energy Save 3	[-200~0/1 deg.]

1203	**Fusing:I/O**	Fusing Input/Output
	This SP adjusts the operation of the fusing exit sensor.	
001	FuseExitSn:On/Off	Display indicates whether the fusing exit sensor is ON or OFF. **0: OFF** 1:ON
002	FuseExitSn Timing	Displays the time interval from when the registration motor goes OFF to when it restarts. [0~5000/1 msec.]
003	FuseExitSn ON	Display indicates whether the fusing paper remains sensor is ON or OFF. [0~5000/1 msec.]
004	FuseExitSn Disp	Dsiplays whether the paper remains sensor is ON or OFF from when the registration motor goes OFF until it restarts. **0: OFF** 1:ON
005	FuseExit M ON	Switches forced rotation of the fusing/exit motor ON/OFF. 0: OFF 1:ON

1901	**CPM Down:Thk**	CPM Down Mode: Thick Paper
	This SP adjusts the CPM down time for thick paper and tab sheets.	
001	CPM Down:Thk	Special CPM Down Setting: Thick Paper [0~4/1] **(This function in not used in this model.)**
002	CPM Down:Tab	Special CPM Down Setting: Index Tabs [0~4/1] **(This function in not used in this model.)**

Downloaded from www.Manualslib.com manuals search engine

1905	**Bypass Thk**	Bypass Tray: Thick Paper
	This SP switches the thick paper mode ON and OFF for thick paper and index sheet feed from the bypass tray.	
001	0:No 1:Yes	Bypass Feed: Thick Paper Mode Switches the thick paper mode ON/OFF for feed from the bypass tray. **0:OFF** 1:ON
002	0:No 1:Yes	Bypass Feed: Thick Paper Mode Switches the thick paper mode ON/OFF for feed of index sheets from the bypass tray. **0:OFF** 1:ON

Downloaded from www.Manualslib.com manuals search engine

Group 2000

2101	**Reg Col Interval**	Color Interval Registration Adjustment
	Use these SPs to correct problems with color registration. Color registration problems can be detected by checking the results of 2901 002 Pattern 1. Before doing these adjustments, try to solve the problem by doing SP2111. For more, see Section "4. Troubleshooting".	
001	Main Scan Dot:K	[-99~+99/1 dot]
002	Main Scan Dot:M	
003	Main Scan Dot:C	
004	Main Scan Dot:Y	
005	MainScan Dot:K	[-31~+31/1 sub dot]
006	MainScan Dot:K-M	
007	MainScan Dot:K-C	
008	MainScan Dot:K-Y	
009	MainScan Dot:K 0-1	[-63~+63/1 line]
010	MainScan Dot:M 0-1	
011	MainScan Dot:C 0-1	
012	MainScan Dot:Y 0-1	
013	SubScan Line:K-M	[-63~+63/1 sub dot]
014	SubScan Line:K-C	
015	SubScan Line:K-Y	
016	SubScan M Adj:K-M	[-33~+33/ 1 step]
017	SubScan M Adj:K-C	
018	SubScan M Adj:K-Y	

2102	**Prt Mag Adj**	Print Magnification Adjustment
	No information is available at this time.	
001	Main Scan Mag	[-100~+100/0.01%]
005	Mag Rate:K 0-1	[-63~+63/1 sub dot]
006	Mag Rate:M 0-1	
007	Mag Rate:C 0-1	
008	Mag Rate:Y 0-1	

2103	**Prt Erase Margin**	Print Erase Width Adjustment
	Adjusts the white space at the leading edge.	
001	Adj LEdge Margin	[-50~+50/0.1 mm]
002	Adj TEdge Margin	[-20+20/1 mm]
003	Adj Left Margin	
004	Adj Right Margin	
005	TEdge Margin:Tra	[0~20/0.1 mm]

2104	**Skew Adj**	Skew Adjustment	
	Use these SP to correct skew in color registration. For more, see Section "4.2.2 Troubleshooting".		
001	Skew Adj	K-M	[-75~+75/1 pulse]
002	Skew Adj	K-C	[-50~+50/1 pulse]
003	Test Pattern	K-Y	[-75~+75/1 pulse]

Downloaded from www.Manualslib.com manuals search engine

2105	LD Syn PM Adj	LD Pulse Modulation Synchronization Adjustment: **DFU**
	No information is available at this time.	
001	K0	[-117~127/]
002	M0	
003	C0	
004	Y0	
005	K1	
006	M1	
007	C1	
008	Y1	

2106	Poly Mtr OFF	Polygon Motor Off Setting
	The polygon motor turns OFF if the machine receives no print job for the time specified in this SP mode after the previous job was completed. [0~180/1 sec]	

2107	Prt Param On/Off	Printer Parameter Settings: On/Off
	No information is available at this time.	
005	Shade Corr Flag	0: OFF 1: ON
006	Phase Ctrl Flage	0: OFF 1: ON

2108	Col Prt Stop	Specify Color to Stop Printing
	This SP switches OFF printing of a color.	
001	K	[0~1/1] 0:Off (Color prints), 1:On (Color does not print)
002	M	
003	C	
004	Y	

Downloaded from www.Manualslib.com manuals search engine

2109	**Test Pattern**	Write Test Pattern		
	Some of these test patterns are used for copy image adjustments but most are used primarily for design testing. These test patterns do not use the IPU.			
001	Image Add		Select "**1**" to have the patterns selected with SP2109 002 print overlapped on one another. [0~1/1] 0:Off, 1:On	
002	Select Pattern		Allows you to select the pattern to print. [0~21/1]	
	0	Off	**14**	Horizontal Cross-Stitch
	1	1-Dot Line	**15**	Crop Marks
	2	1-Dot Slant Cross-Stripe	**16**	Vertical Belt
	3	2-Dot Horizontal Line	**17**	Checkered Flag
	4	2-Dot Vertical Line	**18**	1-Dot 20 mm Grid
	5	1-Dot Horizontal Line	**19**	1-Dot 20 mm Slant Grid
	6	1-Dot Vertical Line	**20**	Horizontal Grayscale
	7	1-Dot Independent	**21**	Horizontal Grayscale-White Stripes
	8	2-Dot Independent	**22**	--- Not Used ---
	9	4-Dot Independent	**23**	--- Not Used ---
	10	Trim Area	**24**	--- Not Used ---
	11	Belt Pattern	**25**	--- Not Used ---
	12	100% Coverage	**26**	--- Not Used ---
	13	Vertical Cross-Stitch	**27**	--- Not Used ---
004	Col Select:YCMK		[0~255/1] **DFU**	
005	Density:K		[0~63/1]	
006	Density:M			
007	Density:C			
008	Density:Y			
011	Gray Density 1		[0~63/1]	
012	Gray Density 2			
013	Gray Density 3			
014	Gray Density 4			
015	Gray Density 5			
016	Gray Density 6			
017	Gray Density 7			
018	Gray Density 8			
019	Gray Density 9			
020	Gray Density 10			
021	Gray Density 11			
022	Gray Density 12			
023	Gray Density 13			
024	Gray Density 14			
025	Gray Density 15			

Downloaded from www.Manualslib.com manuals search engine

2110	Force Tnr Cycle	Force Toner Supply Cycle
001	Forces 2-Point interval correction.	

2111	Force Tnr Pos	Force Toner Position Alignment
	Executes the MUSIC feature. MUSIC is the "Mirror Unit for Skew and Interval Correction". Three MUSIC sensors mounted above the ITB read three MUSIC sensor patterns developed on the ITB. The sensors read the patterns and the machine uses this feedback to adjust 1) the positions of the 3rd scanner mirrors to correct skew (main scan), and 2) the speed of the drum motors to correct the intervals (sub scan) between the patterns. If the vertical alignment of the patterns or the intervals are not correct, this causes color offset. This adjustment is done for each color (Y, M, C, K). Normally, MUSIC executes automatically: • When the machine is turned ON or returns from an energy save mode. • At the interval prescribed by SP2153 015 (Default: 8 min.) • After completion of the process control cycle. • When the machine receives a job after remaining idle for a long period. • After the fusing unit exceeds the prescribed temperature.	

2112	Mag Point Adj	Maginification Point Adjustment
	Corrects the difference in magnification for each color in the left and right direction. [-4~+4/1 (50µm)] Do SP2109 002 and print Pattern 1 on A3/DLT size paper. Examine the pattern with a scaled lupe. For every 50µm adjust the setting in the left or right direction. A 1 step correction corrects 50µm.	
001	M Left	[-4~+4/1]
002	M Right	
003	C Left	
004	C Right	
005	Y Left	
006	Y Right	

2150	Prt Area Pulse	Pulse Setting: Print Area Only **DFU**
	These SPs fine adjust magnification in the main scan direction in increments of 1/32 dots.	
001 - 010	K Area 0 – Area 9	[-120~+120/32 sub dot]
011 - 020	M Area0 – Area 9	
021 - 029	C Area0 – Area 9	
031 - 040	Y Area0 – Area 9	

Downloaded from www.Manualslib.com manuals search engine

2151	**Prt Area Coeff**		Coefficient Setting: Print Area Only **DFU**		
	These SPs adjust the magnification coefficient for each color in these areas: • Mid Area 0-3 • Small Area 1-3 • Small Area 5-8				
001	K MidArea0	[1~99/0.01]	021	C MidArea0	[1~99/0.01]
002	K MidArea3		022	C MidArea3	
003	K SmallArea1	[1~99/0.01]	023	C SmallArea1	[1~99/0.01]
004	K SmallArea2		024	C SmallArea2	
005	K SmallArea3		025	C SmallArea3	
006	K SmallArea6		026	C SmallArea6	
007	K SmallArea7		027	C SmallArea7	
008	K SmallArea8		028	C SmallArea8	
011	M MidArea0	[1~99/0.01]	031	Y MidArea0	[1~99/0.01]
012	M MidArea3		032	Y MidArea3	
013	M SmallArea1	[1~99/0.01]	033	Y SmallArea1	[1~99/0.01]
014	M SmallArea2		034	Y SmallArea2	
015	M SmallArea3		035	Y SmallArea3	
016	M SmallArea6		036	Y SmallArea6	
017	M SmallArea7		037	Y SmallArea7	
018	M SmallArea8		038	Y SmallArea8	

2152	**Shading Coeff**	Shading Correction Coefficient **DFU**
	These SPs set the shading correction coefficient for Areas 01 to 19 for each color. For a list of the ranges and default settings, print the SMC report with SP5990.	
001 - 019	K Area01 - Area19	
021 - 039	M Area01 - Area19	
041 - 058	C Area01 - Area19	
061 - 079	Y Area01 - Area19	

2153	**MUSIC Settings**	MUSIC Condition Settings
	These SPs determine how MUSIC executes. In the settings below 0: Off, 1:On.	
001	Auto Execute	Sets MUSIC to execute automatically. [0~1/1]
002	During ProCon	Sets MUSIC to execute after completion of the process control self-check. [0~1/1]
003	Initialization	Sets MUSIC to execute after the machine is switched ON. [0~1/1]
004	During Data In	Sets MUSIC to execute before image data output. [0~1/1]
005	Writing	Sets MUSIC to execute during long print jobs. [0~1/1] **Note**: Use SP2153 010 to set the number of pages between MUSIC executions (Default: 100 pages).

Downloaded from www.Manualslib.com manuals search engine

007	PaperInt:2Pt Meas	Sets MUSIC to execute with 2-point measurement of image page intervals. [0~1/1]
008	JobInt:2Pt Meas	Sets MUSIC to execute with 2-point measurements immediately before image output. [0~1/1]
010	Interrupt Int	Sets the page interval beween MUSIC executions during long jobs print jobs. [10~300/1 page] **Note**: This SP is effective only when SP2153 005 is switched ON.
012	MUSIC:Temp Chg	Prescribes the exposure unit temperature change at which MUSIC executes at the start of a job. [1~300/0.1 deg]
013	MUSIC:2Pt TempChg	Sets MUSIC to execute with 2-point measurement of the room temperature change. [1~300/0.1 deg]
014	MUSIC Density Lvl	Sets the density of the MUSIC test patterns. Note that the default is set at the maximum setting. [0~63/1]
015	Door Open:Wait	Sets the time interval for MUSIC to execute after the front door is opened and then closed to remove a paper jam or perform some other task. [2~99/1 min.]
016	Clear Main Slip	Clears the skew correction amount for MUSIC in the main scan direction. [0~1/1]
020	Sensor Light 1	Sets the light intensity of MUSIC sensor 1. [0~65535/1]
021	Sensor Light 2	Sets the light intensity of MUSIC sensor 2. [0~65535/1]
022	Sensor Light 3	Sets the light intensity of MUSIC sensor 3. [0~65535/1]
023	AutoLight:PreAdj	Executes automatic adjustment of the light emitted from the MUSIC sensors. [0~1/1]
025	AdjCoeff:FrontKf	Sets the value of the coefficient of the front MUSIC sensor. [0~100/0.1]
026	AdjCoeff:CtrKc	Sets the value of the coefficient for the center MUSIC sensor. [0~100/0.1]
027	AdjCoeff:RearKr	Sets the value of the coefficient of the center MUSIC sensor. [0~100/0.1]
028	Min Patch Fine	Sets the minimum amount of patch shift for MUSIC fine adjustment. [0~100/0.1]
029	Min Patch:Rough	Sets the minimum amount of patch shift for MUSIC rough adjustment. [0~100/0.1]

Downloaded from www.Manualslib.com manuals search engine

030	CMY:LowMin.	No information is available at this time. [0~50/0.1V]
031	CMY:MidMin.	No information is available at this time. [0~50/0.1V]
032	Base MaxDiff	No information is available at this time. [0~50/0.1V]
033	Patch Mini Gap	No information is available at this time. [0~50/0.1V]
034	Light Target Adj	Sets the target value for the intensity of the MUSIC sensor lights. [0~50/0.1V]
035	MY Light Max	Sets the maximum value for the intensity of the MUSIC sensor lights. [0~255/0.1V]
036	Add Upper Limit	No information is available at this time.
037	Add Lower Limit	
038	LaserX:FrontXf	
039	LaserX:CenterXc	
040	LaserX: RearXr	
041	LaserX: TempCoeff	

2154	**2-Point Target**	2-Point Interval Target Setting
	These 2-point target settings done at the factory affect the characteristics of the lenses. These target values must be entered when when the laser unit is replaced. The correct settings are printed below the first barcode on one A5 sheet of paper provided with the replacement laser unit.	
001	K	[60700~63230/**61984**/1]
002	M	
003	C	
004	Y	

2155	**2-Point Int Set**	2-Point Interval Target Setting **DFU**
	These SPs adjust the difference in the position of color registration for MUSIC in the main scan direction, using K (black) as the reference point. Do SP2109 002 and print Pattern 1 on A3/DLT size paper. Examine the pattern with a scaled lupe. For every 43.2µm adjust the setting in the left or right direction. A 1 step correction corrects 50µm.	
001	M Main Scan	[-5~+5/1 (43.2µm)
002	C Main Scan	
003	Y Main Scan	

Downloaded from www.Manualslib.com manuals search engine

2180	Lens Temp	Lens Temperature Monitor
	These SPs display the measured temperatures of the optical lenses for each color.	
001	M-K	Displays the measured temperature of the magenta and black lenses (in the laser optics). [0~999/0.1 deg]
002	Y-C	Displays the measured temperature of the yellow and cyan lenses (in the laser optics). [0~999/0.1 deg]

2181	Alignment Result	Position Alignment Result
	These SPs display the amount of shift correction for each color, the amount of correction done at each sensor in both the main scan and sub scan direction. [-2000~+2000/1]	
001	M Skew Amt	The amount of skew correction for magenta.
002	M Main Skew 1	Amount of shift correction for magenta in the main scan direction at sensor 1.
003	M Main Skew 2	Amount of shift correction for magenta in the main scan direction at sensor 2.
004	M Main Skew 3	Amount of shift correction for magenta in the main scan direction at sensor 3.
005	M Sub Skew 1	Amount of shift correction for magenta in the sub scan direction at sensor 1.
006	M Sub Skew 2	Amount of shift correction for magenta in the sub scan direction at sensor 2.
007	M Sub Skew 3	Amount of shift correction for magenta in the sub scan direction at sensor 3.
011	C Skew Amt	The amount of skew correction for cyan.
012	C Main Skew 1	Amount of shift correction for cyan in the main scan direction at sensor 1.
013	C Main Skew 2	Amount of shift correction for cyan in the main scan direction at sensor 2.
014	C Main Skew 3	Amount of shift correction for cyan in the main scan direction at sensor 3.
015	C Sub Skew 1	Amount of shift correction for cyan in the sub scan direction at sensor 1.
016	C Sub Skew 2	Amount of shift correction for cyan in the sub scan direction at sensor 2.
017	C Sub Skew 3	Amount of shift correction for cyan in the sub scan direction at sensor 3.
021	Y Skew Amt	The amount of skew correction for yellow.
022	Y Main Skew 1	Amount of shift correction for yellow in the main scan direction at sensor 1.
023	Y Main Skew 2	Amount of shift correction for yellow in the main scan direction at sensor 2.
024	Y Main Skew 3	Amount of shift correction for yellow in the main scan direction at sensor 3.
025	Y Sub Skew 1	Amount of shift correction for yellow in the sub scan direction at sensor 1.
026	Y Sub Skew 2	Amount of shift correction for yellow in the sub scan direction at sensor 2.

Downloaded from www.Manualslib.com manuals search engine

027	Y Sub Skew 3	Amount of shift correction for yellow in the sub scan direction at sensor 3.
030	MUSIC Result	Displays the result of MUSIC adjustment

2182	**Skew Corr Total**	Skew Correction Total
	These SPs display the total skew correction for magenta, cyan, and yellow.	
001	M	[-50~+50/1 pulse]
002	C	[-33~+33/1 pulse]
003	Y	[-50~+50/1 pulse]

2183	**2-Point Measure**	2-Point Interval Measurement Monitor
	These SPs allow you to set the focal points for the execution of 2-point measurement of each color.	
001	Focus Value:K	[-100~+100/0.01%]
002	Focus Value:M	
003	Focus Value:C	
004	Focus Value:Y	

2201	**Set DC Charge**	Fixed DC Charge Setting
	These SPs set the dc bias for the standard speed and low speed mode, but take effect only when SP3501 001 is set to "1" (Fixed). The dc bias (an absolute value) is set to +200, making the default values for each color –700. The dc bias is normally adjusted by the process control self-check, but when automatic process control is switched OFF (by setting SP3501 001 to "1"), these values are used for the charge potential.	
001	Std Speed:K	[-999 to –200/1V]
002	Std Speed:M	
003	Std Speed: C	
004	Std Speed: Y	
006	Low Speed:K	
007	Low Speed: M	
008	Low Speed: C	
009	Low Speed: Y	

2202	**Set AC Charge**	Fixed DC Charge Setting
	These SPs set the AC bias for the standard speed mode and low speed mode, but take effect only when SP3501 001 is set to "1" (Fixed). The default ac bias for each color is 2.2 kV (220) The ac bias is normally adjusted by process control self-check, but when automatic process control is switched OFF (by setting SP3501 001 to "1"), these values are used for the charge potential.	
001	Std Speed: K	[0~300/1 kV]
002	Std Speed: M	
003	Std Speed: C	
004	Std Speed: Y	
006	Low Speed: K	
007	Low Speed: M	
008	Low Speed: C	
009	Low Speed: Y	

Downloaded from www.Manualslib.com manuals search engine

2204	**AC Charge Corr**	AC Charge: Setting for Ambient Correction
	These SPs adjust the target ac current for each operating environment (LL, ML, etc.). The process control self-check adjusts the ac current to achieve the target voltage. SP2901 003 (PCU) displays the most recent absolute temperature. If the auto process control self-check fails to achieve the threshold value, then the target selected with these SPs is used.	
001	LL:Target:K	[100~350/1 mA]
002	LL:Target:M	
003	LL:Target:C	
004	LL:Target:Y	
006	ML:Target:K	
007	ML:Target:M	
008	ML:Target:C	
009	ML:Target:Y	
011	MM:Target:K	
012	MM:Target:M	
013	MM:Target:C	
014	MM:Target:Y	
016	MH:Target:K	
017	MH:Target:M	
018	MH:Target:C	
019	MH:Target:Y	
021	HH:Target:K	
022	HH:Target:M	
023	HH:Target:C	
024	HH:Target:Y	

2211	**Set LD Power**	LD Power: Fixed Setting
	These SPs set the power levels of the laser diodes in the exposure unit for the standard speed mode and low speed mode for each color, but take effect only when SP3501 001 is set to "1" (Fixed). With the setting at "0" the LD output is 100%. This can be adjusted in the range –117 to +127 (44% to 160%). The "0" setting is equivalent to 0.171 mW exposed on the surface of the drum. The LD power level is normally adjusted during the process control self-check. These values are used only when automatic process control is switched OFF (by setting SP3501 001 to "1").	
001	Std Speed:K	[-117~+127/1]
002	Std Speed:M	
003	Std Speed:C	
004	Std Speed:Y	
005	Low Speed:K	[-117~+127/1]
006	Low Speed:M	
007	Low Speed:C	
008	Low Speed:Y	

Downloaded from www.Manualslib.com manuals search engine

2212	**Set Dev DC**	Development DC: Fixed Setting
	These SPs set the development dc bias for the standard speed mode and low speed mode for each color, but take effect only when SP3501 001 is set to "1" (Fixed). The dc development bias (absolute value) is set to –200 V, and the default for each color is set to –500 V. These values are used only when automatic process control is switched OFF (by setting SP3501 001 to "1").	
001	Std Speed:K	[-800~0/1 V]
002	Std Speed:M	
003	Std Speed:C	
004	Std Speed:Y	
005	Low Speed:K	[-800~0/1 V]
006	Low Speed:M	
007	Low Speed:C	
008	Low Speed:Y	

2251	**Force Tnr Supply**	Forced Toner Supply: Manual Execution
	Use SPs to increase manually the supply of toner to the sub hopper of the development unit to determine if toner supply is abnormal or to recover normal operation of a color toner supply when image density becomes light. After you press "Execute" the toner supply switches ON for 0.1 sec. and then OFF for 0.45 sec. four times for the select color or colors.	
001	Execute:K	Executes forced toner supply to the selected development unit.
002	Execute:M	
003	Execute:C	
004	Execute:Y	
005	Execute:Col	Executes forced toner supply to the Y, M, C development units only.
006	Execute:All Col	Executes forced toner supply to all development units (Y, M, C, K).

2252	**Set Tnr Supply**	Forced Toner Supply: Setting
	Use these SPs to adjust the number of rotations done by the toner supply clutch when SP2251 001~006 is executed manually. The number of toner supply cluth rotations can be adjusted for each color. A high setting increases the number of rotations and increases the amount of toner supply to the development unit, resulting in a darker image for the selected color.	
001	Supply Times:K	[0~30/1]
002	Supply Times:M	
003	Supply Times:C	
004	Supply Times:Y	

Downloaded from www.Manualslib.com manuals search engine

2253	Manual Tnr Fill	Manually Fill Development Unit Sub Hoppers
	Use SPs to increase manually the supply of toner to the sub hopper of the development unit to determine if toner supply is abnormal or to recover normal operation of a color toner supply when image density becomes light. After you press "Execute" the toner supply cluth switches ON for 2 sec. and then OFF for 0.1 sec. to fill the sub hopper of the development unit. This ON/OFF sequence is repeated up to 20 times or until the toner end sensor detects that toner is present in the sub hopper.	
001	Execute:K	Executes forced filling of the selected development unit.
002	Execute:M	
003	Execute:C	
004	Execute:Y	
005	Execute:Col	Executes forced filling of the Y, M, C development units only.
006	Execute:All Col	Executes forced filling of all development units (Y, M, C, K).

2260	Pot.Sn Check	Potential Sensor Check
	This SP executes a check of all or one selected potential sensor.	
001	All Colors	Select and press "Execute".
002	K	Display the results with SP2261 001 to 012
003	M	
004	C	
005	Y	

2261	Pot.Sn Chk Disp		Potential Sensor Check Results Display
	Displays results of the potential sensor check executed with 2260.		
001	Vd:K	007	Vr:C
002	Vd:M	008	Vr:Y
003	Vd:C	009	Voffset:K
004	Vd:Y	010	Voffset:M
005	Vr:K	011	Voffset:C
006	Vr:M	012	Voffset:Y

Notes for SP2261

Reading	Definition	Abnormal Reading
Vd	Charge bias (Cdc). This is the output of the potential sensor after –700V is applied to the drum. Range: -500 to –700 V	If the reading is out of range: • Potential sensor damaged • Charge unit malfunction • Charge power pack malfunction
Vr	Residual voltage. This is the output of the potential sensor after the LD fires at full power. Normal: -200 V	If above –200V: • Drum deteriorated • Toner shield glass dirty • Potential sensor out of position
Voffset	This is the reading of the potential sensor with no charge applied to the drum. Normal: 0±10V	If reading is out of range: • Potential sensor dirty • Potential sensor out of position

Downloaded from www.Manualslib.com manuals search engine

2262	TD Sn Chk	TD (toner density) Sensor Check Execution
	This SP executes a check of all or one selected TD sensor.	
001	All Colors	Select and press "Execute".
002	K	Display the results with SP2663 001 to 004
003	M	
004	C	
005	Y	

2263	TD Sn Chk Disp	Toner Density Sensor Check Execution Display
	Displays results of 2262. Vt is the most recent output of the TD sensor.	
001	Vt:K	
002	Vt:M	
003	Vt:C	
004	Vt:Y	

2264	ID Sn Chk	ID Sensor Check Execution
	This SP executes a check of the ID sensors.	
2265	ID Sn Chk Disp	
	Displays the most recent ID sensor Vsg and Voffset readings. Notes: • Vsg_reg is the reading of the direct sensors in the black and color ID sensors that detect the reflectivity of the bare surface of ITB. If Vsg_reg is less than 3.8V, the ID sensor may be dirty, damaged, or disconnected • F (Front) refers to the color ID sensor. • R (Rear) refers to the black ID sensor. • If Voffset_reg is less greater than 0.15, the ID sensor should be replaced. (The ID sensors are replaced as a unit.)	
001	Vsg_reg F	
002	Vsg_reg R	
003	Voffset_reg F	
004	Voffset_reg R	

2301	Apply Oil	Not Used

Downloaded from www.Manualslib.com manuals search engine

2302	**Temp/Humid Disp**	Temperature/Humidity Display
	This SP displays the current temperature and humidity. These readings are output by the temperature humidity display located on the bottom of the machine below the waste toner bottle.	
001	Temp Disp	Room temperature (^{o}C). [0~100/1 deg.]
002	Rel Humidity Disp	Relative humidity (saturation point at current temperature). [0~100/1 %rh.]
003	Abs Humidity Disp	Absolute humidity. [0~1000/m^{2}]
004	Current Env Disp	Displays the current environment control mode. The control modes are divided into 5 levels: LL, ML, MM, MH, HH. These levels are determined by thresholds determined for the other readings of this SP and the reading of the absolute humidity (SP2301 003).

2303	**Force Temp Corr**	Force Ambient Temperature Correction **DFU**
	The temperature/humidity sensor reading is used to adjust settings during process control when this SP is set to zero (the default). The value of the absolute humidity reading displayed by SP2302 003, as well as the other readings of the conditions around the machine displayed with SP2302, are used in the process control calculations. If you press any key (1 to 5) below, the value you select is used and the readings of the temperature/humidity sensor are ignored. **Note**: After you press any key (1 to 5), the setting you select remains in effect only while the machine is in the SP mode. Once you leave the SP mode, this SP is reset to zero automatically.	
	0 Sensor Detect	
	1 LL	
	2 ML	
	3 MM	
	4 MH	
	5 HH	

2304	**Set Humid Thresh**	Ambient HumidityThreshold Setting
	Sets the threshold values for the absolute humidity of the current LL and ML settings for the main machine in the present environment.	
001	Abs Humid:Thresh1	[0~1000g/m^{3}]
002	Abs Humid:Thresh2	[0~1000g/m^{3}]
003	Abs Humid:Thresh3	[0~1000g/m^{3}]
004	Abs Humid:Thresh4	[0~1000g/m^{3}]

2306	**Vd Link Corr**	Vd Link Correction
	No information is available at this time.	
001	Set	[0~1/1] 0:Off, 1: On
002	Correction Coeff	[0.01~2.5/0.01]

Downloaded from www.Manualslib.com manuals search engine

2307	**Set Ptype Link**	Paper Type Link Setting
	For the copy mode selected, these SPs 1) switch the image transfer bias for each color and 2) switch the paper transfer and separation bias	
001	Norm	[0~5/1] 0: Normal Paper 1: Thick Paper 2: OHP 3: Special Paper 1 4: Special Paper 2 5: Special Paper 3
002	Recycled Paper	
003	Special Paper	
004	Color 1	
005	Color 2	
006	OHP	
007	Thick	
008	Letterhead	
009	Tab Sheet	
010	Labels	
011	Preprinted	
012	Prepunched	
013	Bond	
014	Custom 1	
015	Custom 2	
016	Custom 3	

2308	**Set Psize Thresh**	Set Paper Size Thresholds
	Sets the correction values (Threshold 1, 2, 3, 4) for paper size.	
001	Thresh 1	[0~25/1 mm]
002	Thresh 2	[0~25/1 mm]
003	Thresh 3	[0~25/1 mm]
004	Thresh 4	[0~25/1 mm]

2312	**Margin K Bias**	Margin K Bias: Setting
	Full Speed: 52 to 128 g/m² (normal paper) Half Speed: 128 to 256 g/m² (thick paper)	
005	Full Spd:ITB	Sets the value of image transfer bias for K in the areas of the image where nothing is printed. [0~500/0.1]
006	Full Spd:PTR	[-100 to –6/1 μA]
007	Full Spd:SepDC	[0~100/0.1 μA]
008	Full Spd:SepAC	[80~120/0.1 kV]]
009	Half Spd:ITB	[0~500/0.1 μA]
010	Half Spd:PTR	[-100~0/1 μA]
011	Half Spd:SepDC	[0~100/0.1 μA]
012	Half Spd:SepAC	[80~120/0.1 kV]]

Downloaded from www.Manualslib.com manuals search engine

2313	**Margin FC Bias**	Margin FC Bias: Setting for K
	This SP sets the image transfer bias for each in areas of the image where nothing is printed in the full-color mode.	
2314	**Set ProCon Bias**	Process Control: Bias Setting for K
	This SP sets the image transfer bias for each color during the process control self-check.	
2315	**Set MUSIC Bias**	MUSIC Bias Setting
	This SP sets the image transfer bias for each color during MUSIC.	
	Note: Full Speed: 52 to 128 g/m² (normal paper) Half Speed: 128 to 256 g/m² (thick paper)	

		2313	**2314**	**2315**
011	Full Spd:ITB:K	[0~500/0.1µA]	[0~500/0.1µA]	[0~500/0.1µA]
012	Full Spd:ITB:M	[0~500/0.1µA]	[0~500/0.1µA]	[0~500/0.1µA]
013	Full Spd:ITB:C	[0~500/0.1µA]	[0~500/0.1µA]	[0~500/0.1µA]
014	Full Spd:ITB:Y	[0~500/0.1µA]	[0~500/0.1µA]	[0~500/0.1µA]
016	Full Spd:PTR	[-6~0/1µA]	[-6~0/1µA]	[-6~0/1µA]
017	Full Spd:SepDC	[0~100/0.1µA]	[0~100/0.1µA]	[0~100/0.1µA]
018	Full Spd:SepAC	[80~120/0.1µA]	[70~100/0.1µA]	[80~120/0.1µA]
020	Half Spd:ITB:K	[0~500/0.1µA]	[0~500/0.1µA]	[0~500/0.1µA]
021	Half Spd:ITB:M	[0~500/0.1µA]	[0~500/0.1µA]	[0~500/0.1µA]
022	Half Spd:ITB:C	[0~500/0.1µA]	[0~500/0.1µA]	[0~500/0.1µA]
023	Half Spd:ITB:Y	[0~500/0.1µA]	[0~500/0.1µA]	[0~500/0.1µA]
025	Half Spd:PTR	[-100~0/1µA]	[-100~0/1µA]	[-100~0/1µA]
026	Half Spd:SepDC	[0~100/0.1µA]	[0~100/0.1µA]	[0~100/0.1µA]
027	Half Spd:SepAC	[80~20/0.1kV]	[80~20/0.1kV]	[80~20/0.1kV]

2316	**Pwr On Jam Bias**	Power On/Jam Recovery: Bias Setting
	Sets the image development bias to be applied for each color after recovery from a paper jam at power ON.	
002	ITB:K	[0 to 50/0.1 µA]
003	ITB:M	
004	ITB:C	
005	ITB:Y	
007	PTR	

2381	**Ptype K:LL**	Paper Type K: LL
	This SP sets image transfer bias for LL (lowest) speed during black-and-white copying in areas where black is used to develop the image.	
006	Full Spd:ITB	[10~250/1%]
011	Half Spd:ITB	[10~250/1%]

Downloaded from www.Manualslib.com manuals search engine

2382	Ptype K:ML	Paper Type K: ML
	This SP sets image transfer bias for ML (Medium Low) speed during black-and-white copying in areas where black is used to develop the image.	
006	Full Spd:ITB	[10~250/1%]
011	Half Spd:ITB	[10~250/1%]

2383	Ptype K:MM	Paper Type K: MM
	This SP sets image transfer bias for MM (Medium) speed during black-and-white copying in areas where black is used to develop the image.	
006	Full Spd:ITB	[10~250/1%]
011	Half Spd:ITB	[10~250/1%]

2384	Ptype K:MH	Paper Type K:MH
	This SP sets image transfer bias for MH (Medium High) speed during black-and-white copying in areas where black is used to develop the image.	
006	Full Spd:ITB	[10~250/1%]
011	Half Spd:ITB	[10~250/1%]

2385	Ptype K:HH	Paper Type K:HH
	This SP sets image transfer bias for HH (Highest) speed during black-and-white copying in areas where black is used to develop the image.	
006	Full Spd:ITB	[10~250/1%]
011	Half Spd:ITB	[10~250/1%]

2391	Ptype FC:LL	Paper Type FC:LL
	This SP sets image transfer bias for LL (Lowest) speed during full-color copying in areas where each color is used to develop the image.	
2392	Ptype FC:ML	Paper Type FC:ML
	This SP sets image transfer bias for ML (Medium Low) speed during full-color copying in areas where each color is used to develop the image.	
2393	Ptype FC:MM	Paper Type FC:MM
	This SP sets image transfer bias for MM (Medium) speed during full-color copying in areas where each color is used to develop the image.	

		2391	2392	2393
012	Full Spd:ITB:K	[10~250/1%]	[10~250/1%]	[10~250/1%]
013	Full Spd:ITB:M			
014	Full Spd:ITB:C			
015	Full Spd:ITB:Y			
022	Half Spd:ITB:K			
023	Half Spd:ITB:K			
024	Half Spd:ITB:C			
025	Half Spd:ITB:Y			

Downloaded from www.Manualslib.com manuals search engine

2394	**Ptype FC:MH**	Paper Type FC:MH	
	This SP sets image transfer bias for MH (Medium High) speed during full-color copying in areas where each color is used to develop the image.		
2395	**Ptype FC:HH**	Paper Type FC:HH	
	This SP sets image transfer bias for HH (Highest) speed during full-color copying in areas where each color is used to develop the image.		
012	Full Spd:ITB:K	**2394**	**2395**
013	Full Spd:ITB:M	[10~250/1%]	[10~250/1%]
014	Full Spd:ITB:C		
015	Full Spd:ITB:Y		
022	Half Spd:ITB:K		
023	Half Spd:ITB:K		
024	Half Spd:ITB:C		
025	Half Spd:ITB:Y		

2401	**Norm K Bias**	Set Bias for Plain Paper: K (Black)
	Sets the standard value of bias voltages at image transfer, and paper separation in areas where black is used on plain paper during black-and-white printing.	
001	ITB	[0~500/0.1 μA]
007	Side1:PTR	[-100~0/0.1 μA]
008	Side1:SepDC	[0~100/0.1 μA]
009	Side1:SepAC	[80~120/0.1 kV]
012	Side2:PTR	[-100~0/1 μA]
013	Side2:SepDC	[0~100/0.1 μA]
014	Side2:SepAC	[80~120/0.1 kV]

2406	**Norm FC Bias**	Set Bias for Plain Paper: FC (Full Color)
	Sets the standard value of bias voltages at image transfer, and paper separation in areas the four colors are used on plain paper during full color printing.	
001	ITB:K	[0~500/0.1 μA]
002	ITB:M	[0~500/0.1 μA]
003	ITB:C	[0~500/0.1 μA]
004	ITM:Y	[0~500/0.1 μA]
013	Side1:PTR	[-100~0/1 μA]
014	Side1:SepDC	[0~100/0.1 μA]
015	Side1:SepAC	[80~120/0.1 μA]
021	Side1:PTR	[-100~0/1 μA]
022	Side1:SepDC	[0~100/0.1 μA]
023	Side1:SepAC	[80~120/1 μA]

Downloaded from www.Manualslib.com manuals search engine

2411	Size Coeff:Norm	Size Correction Coefficient for Plain Paper: Size 1
	These settings apply to paper sizes wider than the paper size of **SP2308 001** (Threshold 1) and are applied only to 1) areas where image is created, 2) plain paper at full speed only, 3) both black-and-white or full color mode	
007	Side1:Size 1 :PTR	Applies to Side 1 of duplex page. [100~600/1%]
012	Side2:Size 1 :PTR	Applies to Side 2 of duplex page. [100~600/1%]

2412	Size Coeff:Norm	Size Correction Coefficient for Plain Paper: Size 2
	These settings apply to paper sizes wider than the paper size of **SP2308 002** (Threshold 2) and are applied only to 1) areas where image is created, 2) plain paper at full speed only, 3) both black-and-white or full color mode	
007	Side1:Size2:PTR	Applies to Side 1 of duplex page. [100~600/1%]
012	Side2:Size2:PTR	Applies to Side 2 of duplex page. [100~600/1%]

2413	Size Coeff:Norm	Size Correction Coefficient for Plain Paper: Size 3
	These settings apply to paper sizes wider than the paper size of **SP2308 003** (Threshold 3) and are applied only to 1) areas where image is created, 2) plain paper at full speed only, 3) both black-and-white or full color mode	
007	Side1:Size3:PTR	Applies to Side 1 of duplex page. [100~600/1%]
012	Side2:Size3:PTR	Applies to Side 2 of duplex page. [100~600/1%]

2414	Size Coeff:Norm	Size Correction Coefficient for Plain Paper: Size 4
	These settings apply to paper sizes wider than the paper size of **SP2308 004** (Threshold 4) and are applied only to 1) areas where image is created, 2) plain paper at full speed only, 3) both black-and-white or full color mode	
007	Side1:Size4:PTR	Applies to Side 1 of duplex page. [100~600/1%]
012	Side2:Size4:PTR	Applies to Side 2 of duplex page. [100~600/1%]

2415	Size Coeff:Norm	Size Correction Coefficient for Plain Paper: Size 5
	These settings apply to paper sizes wider than the paper size of **SP2308 004** (Threshold 4), or narrower than the paper size of **SP2308 003** (Threshold 3), and are applied only to 1) areas where image is created, 2) plain paper at full speed only, 3) both black-and-white or full color mode.	
007	Side1:Size5:PTR	Applies to Side 1 of duplex page. [100~600/1%]
012	Side2:Size5:PTR	Applies to Side 2 of duplex page. [100~600/1%]

Downloaded from www.Manualslib.com manuals search engine

2421	LEdge Cor:Norm K	Leading Edge Correction for Plain Paper: K
	This SP sets the coefficient used to 1) correct bias at the leading edge for black image transfer (ITB) 2) bias at image to paper transfer, and 3) correct the dc and ac voltages applied at paper separation. **Notes**: These settings apply: • To the distance from the leading edge set with **SP2422** • Only to black printing on plain paper at full speed (even when full-color is selected).	
001	ITB	[0~400/1%] **Note**: ITB applies to both sides.
007	Side1:PTR	
008	Side1:SepDC	
009	Side1:SepAC	
012	Side2:PTR	
013	Side2:SepDC	
014	Side2:SepAC	

2422	LEdge SWT:Norm K	Leading Edge Switch Timing for Plain Paper: K
	Sets the switch OFF timing **SP2421**. The value selected is the number of mm from the leading edge of the paper. These settings 1) apply only to black printing on plain paper at full speed (even when full-color is selected), and 2) apply to to both sides of a duplex page.	
001	ITB	[0~30/1 mm]
002	PTR	[0~30/1 mm]
003	SepDC	[0~30/1 mm]
004	SepAC	

2423	TEdgeCor:Norm K	Trailing Edge Correction for Plain Paper: K
	This SP sets the coefficient used to correct bias at image to paper transfer for each side of the paper. These settings are applied to the trailing edge for black printing on plain paper at full speed and apply to black, even when printing in full color mode.	
007	Side1:PTR	[0~400/1%]
012	Side2:PTR	

2424	TEdgeSWT:Norm K PTR	Trailing Edge Switch Timing for Plain Paper: K
	This setting sets the start timing for application of **SP2423** at the trailing edge of each sheet (Side 1, Side 2). This setting is applied to the trailing edge for black printing on plain paper at full speed and apply to black, even when printing in full color mode. [-100~0/1 mm] The “mm” distance is measured away from the trailing edge of the image.	

Downloaded from www.Manualslib.com manuals search engine

2426	LEdgeCor:Norm FC	Leading Edge Correction for Plain Paper: FC
	This SP sets the coefficient used to 1) correct bias at the leading edge for full-color image transfer (ITB) bias at image to paper transfer when using plain paper, and 3) correct the dc and ac voltages applied at paper separation. **Notes**: These settings apply: • Only the distance from the leading edge set with **SP2427**. • Only to full color printing on plain paper at full speed.	
001	ITB	[0~400/1%]
007	Side1:PTR	[0~400/1%]
008	Side1:SepDC	[0~400/1%]
009	Side1:SepAC	[0~400/1%]
012	Side2:PTR	[0~400/1%]
013	Side2:SepDC	[0~400/1%]
014	Side2:SepAC	[0~400/1%]

2427	LEdgeSWT:Norm FC	Leading Edge Switch Timing for Plain Paper: FC
	This SP sets switch timing that sets the distance from the leading edge where the settings of **SP2426 001** are to apply. The value selected is the number of mm from the leading edge of the paper. These settings 1) apply only full-color printing on plain paper at full speed, and 2) apply to to both sides of a duplex page.	
001	ITB	[0~30/1 mm]
002	PTR	[0~30/1 mm]
003	SepDC	[0~30/1 mm]
004	SepAC	[0~30/1 mm]

2428	TEdgeCor:Norm FC	Trailing Edge Correction for Plain Paper: FC
	This SP sets the coefficient used to correct bias at image to paper transfer for each side of the paper. These settings are applied to the trailing edge for full-color printing on plain paper at full speed as far as where **SP2429 002** takes effect.	
007	Side1:PTR	[0~400/1%]
012	Side2:PTR	

2429	TEdgeSWT:Norm FC – PTR	Switch Timing for Plain Paper: FC
002	This setting sets the start timing for application of **SP2428 007, 2428 012** at the trailing edge of each sheet (Side 1, Side 2). These settings are applied to the trailing edge for black printing on plain paper at full speed and apply to black, even when printing in full color mode. [-100~0/1 mm] The “mm” distance is measured away from the trailing edge of the image.	

Downloaded from www.Manualslib.com manuals search engine

2431	**Norm:K:LL**	Plain Paper: K Low		
2432	**Norm:K:ML**	Plain Paper: K Medium Low		
2433	**Norm:K:MM**	Plain Paper: K Medium		
	These SPs set the paper size correction coefficient for the image to paper transfer bias threshold values calculated based on the reading of the absolute humidity from the temperature/humidity sensor and the thresholds set with **SP2304**. **SP2431** – Up to SP2304 001: Threshold 1 **SP2432** – More than SP2304 001 Threshold 1, up to SP2304 002 Threshold 2. **SP2433** – More than SP2304 002 Threshold 2, up to SP2304 003 Threshold 3 These settings apply 1) only where the image is created in black (in either black-and-white or full-color mode) on plain paper at full speed.			
		2431	**2432**	**2433**
007	Side1:PTR	[10~250/1%]	[10~250/1%]	[10~250/1%]
008	Side1:SepDC	[10~250/1%]	[10~250/1%]	
009	Side1:SepAC	[10~250/1%]	[10~250/1%]	
012	Side2:PTR	[10~250/1%]	[10~250/1%]	
013	Side2:SepDC	[10~250/1%]	[10~250/1%]	
014	Side2:SepAC	[10~250/1%]	[10~250/1%]	

2434	**Norm:K:MH**	Plain Paper: K Medium High	
2435	**Norm:K:HH**	Plain Paper: K High	
	These SPs set the paper size correction coefficient for the image to paper transfer bias threshold values calculated based on the reading of the absolute humidity from the temperature/humidity sensor and the thresholds set with **SP2304.** **SP2434** – More than SP2304 003 Threshold 3, up to SP2304 004 Threshold 4 **SP2435** – More than SP2304 004 Threshold 4 These settings apply 1) only where the image is created in black (in either black-and-white or full-color mode) on plain paper.		
		SP2432	**SP2432**
007	Side1:PTR	[10~250/1%]	[10~250/1%]
008	Side1:SepDC	[10~250/1%]	
009	Side1:SepAC	[10~250/1%]	
012	Side2:PTR	[10~250/1%]	
013	Side2:SepDC	[10~250/1%]	
014	Side2:SepAC	[10~250/1%]	

Downloaded from www.Manualslib.com manuals search engine

2441	**Norm:FC:LL**	Plain Paper: FC Low		
2442	**Norm:FC:ML**	Plain Paper: FC Medium Low		
2443	**Norm:FC:MM**	Plain Paper: FC Medium Medium		
	These SPs set the paper size correction coefficient for the image to paper transfer bias threshold values calculated based on the reading of the absolute humidity from the temperature/humidity sensor and the thresholds set with **SP2304**. **SP2441** – Up to SP2304 001: Threshold 1 **SP2442** – More than SP2304 001 Threshold 1, up to SP2304 002 Threshold 2. **SP2443** – More than SP2304 002 Threshold 2, up to SP2304 003 Threshold 3 These settings apply 1) only where the image is created in full-color on plain paper at full speed.			
		SP2441	**SP2442**	**SP2443**
017	Side1:PTR	[10~250/1%]	[10~250/1%]	[10~250/1%]
018	Side1:SepDC	[10~250/1%]	[10~250/1%]	
019	Side1:SepAC	[10~250/1%]	[10~250/1%]	
027	Side2:PTR	[10~250/1%]	[10~250/1%]	
028	Side2:SepDC	[10~250/1%]	[10~250/1%]	
029	Side2:SepAC	[10~250/1%]	[10~250/1%]	

2444	**Norm:FC:MH**	Plain Paper: FC Medium High	
2445	**Norm:FC:HH**	Plain Paper: FC High	
	These SPs set the paper size correction coefficient for the image to paper transfer bias threshold values calculated based on the reading of the absolute humidity from the temperature/humidity sensor and the thresholds set with **SP2304.** **SP2444** – More than SP2304 003 Threshold 3, up to SP2304 004 Threshold 4 **SP2445** – More than SP2304 004 Threshold 4 These settings apply 1) only where the image is created in black (in either black-and-white or full-color mode) on plain paper.		
		SP2444	**SP2445**
017	Side1:PTR	[10~250/1%]	[10~250/1%]
018	Side1:SepDC	[10~250/1%]	[10~250/1%]
019	Side1:SepAC	[10~250/1%]	[10~250/1%]
027	Side2:PTR	[10~250/1%]	[10~250/1%]
028	Side2:SepDC	[10~250/1%]	[10~250/1%]
029	Side2:SepAC	[10~250/1%]	[10~250/1%]

2501	**Set Bias:Thk:K**	Set Bias for Thick Paper: K
	This SP sets the image transfer bias for the drum to ITB image transfer at the black PCU when using thick paper and printing in black-and-white mode.	
001	ITB	[-100~0/1 µA]
007	Side1:PTR	[0~100/0.1 µA]
008	Side1:SepDC	[0~100/0.1 µA]
009	Side1:SepAC	[80~120/0.1 µA]
012	Side2:PTR	[-100~0/1 µA]
013	Side2:SepDC	[0~100/0.1 µA]
014	Side2:SepAC	[80~120/0.1 µA]

Downloaded from www.Manualslib.com manuals search engine

2506	Set Bias:Thk:FC	Set Bias for Thick Paper: FC
	This SP sets the following items with printing full-color on thick paper: 1) the image transfer bias for the drum to ITB image transfer for each color, 2) the ITB image to paper transfer, 3) DC/AC paper separation voltages for both sides duplex sheets.	
001	ITB:K	[0~500/0.1 μA]
002	ITB:M	[0~500/0.1 μA]
003	ITB:C	[0~500/0.1 μA]
004	ITB:Y	[0~500/0.1 μA]
013	Side1:PTR	[-100~0/1 μA]
014	Side1:SepDC	[0~100/0.1 μA]
015	Side1:SepAC	[80~120/0.1 kV
021	Side2:PTR	[-100~0/1 μA]
022	Side2:SepDC	[0~100/0.1 μA]
023	Side2:SepAC	[80~120/0.1 kV

2511	Size Coeff:Thk	Size Correction Coefficient: Thick Paper
	These settings 1) apply to thick paper sizes wider than the paper size of **2308 001** Threshold 1, 2) apply to image areas only, 3) apply to thick paper mode (1/2 speed: 128 to 256 g/m²).	
007	Side1:Size 1 :PTR	[100~600/1%]
012	Side2:Size 1 :PTR	

2512	Size Coeff:Thk	Size Correction Coefficient: Thick Paper
	These settings 1) apply to above **2308 002** Threshold 2, and below **SP2308 003** Threshold 3, 2) apply to image areas only, 3) apply to thick paper mode (1/2 speed: 128 to 256 g/m²).	
007	Side1:Size2:PTR	[100~600/1%]
012	Side2:Size2:PTR	[100~600/1%]

2513	Size Coeff:Thk	Size Correction Coefficient: Thick Paper
	These settings 1) apply to above **2308 003** Threshold 3, and less than **SP2308 002** Threshold 2, 2) apply to image areas only, 3) apply to thick paper mode (1/2 speed: 128 to 256 g/m²).	
007	Side1:Size3:PTR	[100~600/1%]
012	Side2:Size3:PTR	[100~600/1%]

2514	Size Coeff:Thk	Size Correction Coefficient: Thick Paper
	These settings 1) apply to above **2308 004** Threshold 4, and less than **SP2308 003** Threshold 3, 2) apply to image areas only, 3) apply to thick paper mode (1/2 speed: 128 to 256 g/m²).	
007	Side1:Size4:PTR	[100~600/1%]
012	Side2:Size4:PTR	[100~600/1%]

Downloaded from www.Manualslib.com manuals search engine

2515	Size Coeff:Thk	Size Correction Coefficient: Thick Paper
	These settings 1) apply to paper widths up to **SP2308 004** Threshold 4, 2) apply to image areas only, 3) apply to thick paper mode (1/2 speed: 128 to 256 g/m²).	
007	Side1:Size5:PTR	[100~600/1%]
012	Side2:Size5:PTR	[100~400/1%]

2521	LEdge Cor:Thk:K	Leading Edge Correction: Thick Paper: K
	This SP sets the coefficient used to 1) correct bias at the leading edge for black image transfer (ITB), 2) bias at image to paper transfer on thick paper, and 3) correct the dc and ac voltages applied at paper separation. **Notes**: These settings apply: • To the distance from the leading edge set with **SP2522 001** • Only to black printing on plain paper at half-speed (128~256 g/m²), regardless of whether black-and-white or full-color is selected.	
001	ITB	[0~400/1%]
007	Side1:PTR	[0~400/1%]
008	Side1:SepDC	[0~400/1%]
009	Side1:SepAC	[0~400/1%]
012	Side2:PTR	[0~400/1%]
013	Side2:SepDC	[0~400/1%]
014	Side2:SepAC	[0~400/1%]

2522	LEdge SWT:Thk:K	Leading Edge Switch Timing for Thick Paper: K
	This SP sets switch timing that switches OFF the application of **SP2521** for thick paper. The value selected is the number of mm from the leading edge of the paper. These settings 1) apply only to black printing on thick paper at half-speed (128~256 g/m^2). and 2) apply to to both sides of a duplex page.	
001	ITB	[0~30/1 mm]
002	PTR	[0~30/1 mm]
003	SepDC	[0~30/1 mm]
004	SepAC	

2523	TEdge Cor:Thk K	Trailing Edge Correction for Thick Paper: K
	This SP sets the coefficient used to correct bias at image to paper transfer for each side of the paper. These settings are applied to the trailing edge for black printing on thick paper (128~256 g/m^2) at half-speed and apply to black, even when printing in full color mode.	
007	Side1:PTR	[0~400/1%]
012	Side2:PTR	

2524	TEdge Cor:Thk:K – PTR	Trailing Edge Correction for Thick Paper: K
	This setting sets the start timing for application of **SP2523 012** at the trailing edge of each sheet (Side 1, Side 2). This setting is applied to the trailing edge for black printing on thick paper (128~256 g/m^2) at half-speed and applies to black, even when printing in full color mode. [-100~0/1 mm]	

Downloaded from www.Manualslib.com manuals search engine

2526	LEdge Cor:Thk:FC	Leading Edge Correction for Thick Paper: K
	This SP sets the coefficient used to 1) correct bias at the leading edge for full-color image transfer (ITB) bias at image to paper transfer when using thick paper (128~256 g/m^2), and 3) correct the dc and ac voltages applied at paper separation. **Notes**: These settings apply: • Only the distance from the leading edge set with **SP2527**. • Only to full color printing on thick paper at half speed.	
001	ITB	[0~400/1%]
007	Side1:PTR	[0~400/1%]
008	Side1:SepDC	[0~400/1%]
009	Side1:SepAC	
012	Side2:PTR	[0~400/1%]
013	Side2:SepDC	[0~400/1%]
014	Side2:SepAC	

2527	LEdge SWT:Thk:FC	Leading Edge Switch Timing for Thick Paper: FC
	This SP sets switch timing that sets the distance from the leading edge where the settings of **SP2526 001** are to apply. The value selected is the number of mm from the leading edge of the paper. These settings 1) apply only full-color printing on thick paper (128~256 g/m^2) at half speed, and 2) apply to to both sides of a duplex page.	
001	ITB	[0~30/1 mm]
002	PTR	[0~30/1 mm]
003	SepDC	[0~30/1 mm]
004	SepAC	

2528	TEdge Cor:Thk FC	Trailing Edge Correction for Thick Paper: FC
	This SP sets the coefficient used to correct bias at image to paper transfer for each side of the paper. These settings are applied to the trailing edge for full-color printing on thick paper (128~256 g/m^2) at half speed as far as where **SP2529 002** takes effect.	
007	Side1:PTR	[0~400/1%]
012	Side2:PTR	

2529	TEdge Cor:Thk:FC – PTR	Trailing Edge Correction for Thick Paper: FC
002	This setting sets the start timing for application of **SP2528 007, 2528 012** at the trailing edge of each sheet (Side 1, Side 2). These settings are applied to the trailing edge for black printing on plain paper at full speed and apply to black, even when printing in full color mode. [-100~0/1 mm] The mm distance is measured away from the trailing edge of the image.	

Downloaded from www.Manualslib.com manuals search engine

2531	**Thk:K:LL**	Thick Paper: K Low		
2532	**Thk:K:ML**	Thick Paper: K Medium Low		
2533	**Thk:K:MM**	Thick Paper: K Medium		
	These SPs set the paper size correction coefficient for the image to paper transfer bias threshold values calculated based on the reading of the absolute humidity from the temperature/humidity sensor and the thresholds set with **SP2304 001** **SP2431** – Up to SP2304 001: Threshold 1 **SP2432** – More than SP2304 001 Threshold 1, up to SP2304 002 Threshold 2. **SP2433** – More than SP2304 002 Threshold 2, up to SP2304 003 Threshold 3 These settings apply only to the image area printed on thick paper in black-and-white mode at half-speed (128~256 g/m^2).			
		SP2531	**SP2532**	**SP2533**
007	Side1:PTR	[10~250/1%]	[10~250/1%]	[10~250/1%]
008	Side1:SepDC	[10~250/1%]	[10~250/1%]	
009	Side1:SepAC	[10~250/1%]	[10~250/1%]	
012	Side2:PTR	[10~250/1%]	[10~250/1%]	
013	Side2:SepDC	[10~250/1%]	[10~250/1%]	
014	Side2:SepAC	[10~250/1%]	[10~250/1%]	

2534	**Thk:K:MH**	Thick Paper: K Medium High	
2535	**Thk:K:HH**	Thick Paper: K High	
	These SPs set the paper size correction coefficient for the image to paper transfer bias threshold values calculated based on the reading of the absolute humidity from the temperature/humidity sensor and the thresholds set with **SP2304.** **SP2534** – More than SP2304 003 Threshold 3, up to SP2304 004 Threshold 4 **SP2535** – More than SP2304 004 Threshold 4 These settings apply 1) only where the image is created in black (in either black-and-white or full-color mode) on plain paper.		
		SP2534	**SP2535**
007	Side1:PTR	[10~250/1%]	[10~250/1%]
008	Side1:SepDC	[10~250/1%]	[10~250/1%]
009	Side1:SepAC	[10~250/1%]	[10~250/1%]
012	Side2:PTR	[10~250/1%]	[10~250/1%]
013	Side2:SepDC	[10~250/1%]	[10~250/1%]
014	Side2:SepAC	[10~250/1%]	[10~250/1%]

Downloaded from www.Manualslib.com manuals search engine

2541	**Thk:FC:LL**	Thick Paper: FC Low		
2542	**Thk:FC:ML**	Thick Paper: FC Medium Low		
2543	**Thk:FC:MM**	Thick Paper: FC Medium		
	These SPs set the paper size correction coefficient for the image to paper transfer bias threshold values calculated based on the reading of the absolute humidity from the temperature/humidity sensor and the thresholds set with **SP2304**. **SP2541** – Up to SP2304 001: Threshold 1 **SP2542** – More than SP2304 001 Threshold 1, up to SP2304 002 Threshold 2. **SP2543** – More than SP2304 002 Threshold 2, up to SP2304 003 Threshold 3 These settings apply 1) only where the image is created in full-color on thick paper (128~256 g/m^2) at full speed.			
		2541	**2542**	**2543**
017	Side1:PTR	[10~250/1%]	[10~250/1%]	[10~250/1%]
018	Side1:SepDC	[10~250/1%]	[10~250/1%]	
019	Side1:SepAC	[10~250/1%]	[10~250/1%]	
027	Side2:PTR	[10~250/1%]	[10~250/1%]	
028	Side2:SepDC	[10~250/1%]	[10~250/1%]	
029	Side2:SepAC	[10~250/1%]	[10~250/1%]	

2544	**Thk:FC:MH**	Thick Paper: FC Medium High	
2545	**Thk:FC:HH**	Thick Paper: FC High	
	These SPs set the paper size correction coefficient for the image to paper transfer bias threshold values calculated based on the reading of the absolute humidity from the temperature/humidity sensor and the thresholds set with **SP2304.** **SP2544** – More than SP2304 003 Threshold 3, up to SP2304 004 Threshold 4 **SP2545** – More than SP2304 004 Threshold 4 These settings apply 1) only where the image is created in full-color on thick paper (128~256 g/m^2) at full speed.		
		SP2544	**SP2545**
017	Side1:PTR	[10~250/1%]	[10~250/1%]
018	Side1:SepDC	[10~250/1%]	[10~250/1%]
019	Side1:SepAC	[10~250/1%]	[10~250/1%]
027	Side2:PTR	[10~250/1%]	[10~250/1%]
028	Side2:SepDC	[10~250/1%]	[10~250/1%]
029	Side2:SepAC	[10~250/1%]	[10~250/1%]

2601	**OHP K Bias**	Set Bias for Transparency: K
	This SP sets the following standard bias voltages applied for the image area on OHP in the black-and-white mode at 1) image transfer from drum to ITB, 2) image transfer from ITB to paper, and 3) at paper separation from the ITB.	
001	ITB	[0~500/0.1 μA]
002	PTR	[-100~0/0.1 μA]
003	SepDC	[0~100/0.1 μA]
004	SepAC	[80~120/0.1 μA]

Downloaded from www.Manualslib.com manuals search engine

2606	OHP FC Bias	Set Bias for Transparency: K
	This SP sets the following standard bias voltages applied for the image area on OHP in the full-color mode at 1) image transfer from drum to ITB for each color, 2) image transfer from ITB to paper, and 3) at paper separation from the ITB.	
001	ITB: K	[0~500/0.1 μA]
002	ITB: M	[0~500/0.1 μA]
003	ITB: C	[0~500/0.1 μA]
004	ITB: Y	[-100~0/0.1 μA]
005	PTR	[0~100/0.1 μA]
006	SepDC	[0~100/0.1 μA]
007	SepAC	[80~120/0.1 μA]

2611	Size Coeff:OHP	Size Correction Coefficient for Transparency
	This SP setting applies to 1) OHP widths above Threshold 1 (**SP2308 001**), 2) the image area only, 3) OHP only, 4) either black-and-white or full-color mode.	
002	Size 1 :PTR	[100~600/1%]

2613	Size Coeff:OHP	Size Correction Coefficient for Transparency
	This SP setting applies to 1) OHP widths larger Threshold 3 (**SP2308 002**) and smaller than Threshold , 2) the image area only, 3) OHP only, 4) either black-and-white or full-color mode. [100~600/1%]	

2621	LEdge Cor:OHP K	Leading Edge Correction for Transparency: K
	These SPs do the following settings when printing on OHP in the black-and-white mode at half-speed (128~256 g/m^2): 1) ITB: Sets strength/timing of the correction coefficient for the application of bias when the image is transferred from the drum to the ITB. 2) PTR: Sets the strength/timing correction coefficient for the application of bias when the image is transferred from ITB. 3) SepDC, SepAC: Set the strength/timing of the dc and ac charges applied to neutralize the charges on the belt and paper so they will separate more easily. **Note**: **SP2621** selects the strength of the bias coefficient, and **SP2622** sets the start timing of the bias application.	
2622	**LEdge SWT:OHP K**	Leading Edge Switch Timing for Transparency: K
	Sets the switch OFF timing of SP2626. The selected value is the number of mm from the leading edge. Applies only to printing in black-and-white mode on OHP in half-speed mode (128~256 g/m^2).	

		2621	**2622**
001	ITB	[0~400/1%]	[0~30/1 mm]
002	PTR	[0~400/1%]	[0~30/1 mm]
003	SepDC	[0~400/1%]	[0~30/1 mm]
004	SepAC	[0~400/1%]	[0~30/1 mm]

Downloaded from www.Manualslib.com manuals search engine

2623	**TEdge Cor:OHP K – PTR**	Trailing Edge Correction for Transparency: K
	Sets the strength of the bias coefficient for the bias applied at the trailing edge when the image is transferred from ITB to paper. Applied when printing in black-and-white mode on OHP at half-speed (128~256 g/m^2).	
2624	**TEdge SWT:OHP K – PTR**	Trailing Edge Switch Timing for Transparency: K
	Sets the switch timing that determines the distance from the leading edge where the **SP2623 002** setting is applied during image transfer from ITB to paper. Applied only when printing in black-and-white mode on OHP at half speed (128~256 g/m^2).	

2623	**2624**	
[0~400/1%]	[-100~0/1%]	

2626	**LEdge Cor:OHP FC**	Leading Edge Correction for Transparency: FC
	These SPs do the following settings when printing on OHP in the full-color mode at half-speed (128~256 g/m^2): 1) ITB: Sets the correction coefficient for the application of bias when the image is transferred from the drum to the ITB. The selected value is the distance in mm from the leading edge. 2) PTR: Sets the correction coefficient for the application of bias when the image is transferred from ITB. 3) SepDC, SepAC: Set the dc/ac charges applied to neutralize the charges on the belt and paper so they will separate more easily. **Note**: **SP2626** selects the strength of the bias coefficient, and **SP2627** sets the start timing of the bias application.	
2627	**LEdge SWT:OHP FC**	Leading Edge Switch Timing for Transparency: FC
	Sets the switch OFF timing of SP2626. The selected value is the number of mm from the leading edge. Applies only to printing in full-color mode on OHP in half-speed mode (128~256 g/m^2).	

		2626	**2627**
001	ITB	[0~400/1%]	[0~30/1 mm]
002	PTR	[0~400/1%]	[0~30/1 mm]
003	SepDC	[0~400/1%]	[0~30/1 mm]
004	SepAC	[0~400/1%]	[0~30/1 mm]

2628	**TEdge Cor:OHP FC – PTR**	Trailing Edge Correction for Transparency: FC
002	Sets the start timing for **SP2629 002** at the trailing edge. Applied to the trailing edge for full-color printing on OHP at half-speed (128~256 g/m^2).	
2629	**TEdge SWT:Thk FC – PTR**	Switch Timing for Transparency: FC
002	Sets the switch timing that determines the distance from the leading edge where the settings of **SP2628 002** are applied during image transfer from ITB to OHP during full-color printing at half-speed (128~256 g/m^2).	

2628	**2629**	
[0~400/1%]	[-100~0/1%]	

Downloaded from www.Manualslib.com manuals search engine

2631	**OHP:K:LL**	Transparency: K Low
2632	**OHP:K:ML**	Transparency: K Medium Low
2633	**OHP:K:MM**	Transparency: K Medium
2634	**OHP:K:MH**	Transparency: K Medium High
2635	**OHP:K:HH**	Transparency: K High

These SPs set the paper size correction coefficient for the image to paper transfer bias threshold values calculated based on the reading of the absolute humidity from the temperature/humidity sensor and the thresholds set with **SP2304 001**.
SP2631 – Up to **SP2304 001:** Threshold 1
SP2632 – More than **SP2304 001** Threshold 1, up to **SP2304 002** Threshold 2.
SP2633 – More than **SP2304 002** Threshold 2, up to **SP2304 003** Threshold 3.
SP2634 – More than **SP2304 003** Threshold 3, up to **SP2304 004** Threshold 4.
SP2635 – More than **SP2304 004** Threshold 4
These settings apply only to the image area printed on OHP in black-and-white mode at half-speed (128~256 g/m^2).

		2631	**2632**	**2633**
002	PTR	[10~250/1%]	[10~250/1%]	[10~250/1%]
003	SepDC	[10~250/1%]	[10~250/1%]	[10~250/1%]
004	SepAC	[10~250/1%]	[10~250/1%]	[10~250/1%]

		2634	**2635**	
002	PTR	[10~250/1%]	[10~250/1%]	
003	SepDC	[10~250/1%]	[10~250/1%]	
004	SepAC	[10~250/1%]	[10~250/1%]	

2641	**OHP:FC:LL**	Transparency: FC Low
2642	**OHP:FC:ML**	Transparency: FC Medium Low
2643	**OHP:FC:MM**	Transparency: FC Medium
2644	**OHP:FC:MH**	Transparency: FC Medium High
2645	**OHP:FC:HH**	Transparency: FC High

These SPs set the paper size correction coefficient for the image to paper transfer bias threshold values calculated based on the reading of the absolute humidity from the temperature/humidity sensor and the thresholds set with **SP2304 001**.
SP2631 – Up to **SP2304 001:** Threshold 1
SP2632 – More than **SP2304 001** Threshold 1, up to **SP2304 002** Threshold 2.
SP2633 – More than **SP2304 002** Threshold 2, up to **SP2304 003** Threshold 3.
SP2634 – More than **SP2304 003** Threshold 3, up to **SP2304 004** Threshold 4.
SP2635 – More than **SP2304 004** Threshold 4
These settings apply only to the image area printed on OHP in full-color mode at half-speed (128~256 g/m^2).

		2641	**2642**	**2643**
007	PTR	[10~250/1%]	[10~250/1%]	[10~250/1%]
008	SepDC	[10~250/1%]	[10~250/1%]	[10~250/1%]
009	SepAC	[10~250/1%]	[10~250/1%]	[10~250/1%]

		2644	**2645**	
007	PTR	[10~250/1%]	[10~250/1%]	
008	SepDC	[10~250/1%]	[10~250/1%]	
009	SepAC	[10~250/1%]	[10~250/1%]	

Downloaded from www.Manualslib.com manuals search engine

2751	Sp1 K Bias	Set Bias for Special Paper 1: K
	These SPs set the standard values of the electrical charges that are applied to 1) create bias for image transfer from drum to ITB, 2) create bias for image transfer from ITB to paper (PTR), and 3) neutralize the charges on the both sides of the paper to separate the paper from the ITB (SepDC, SepAC). These settings are used when printing on Special Paper 1 in the black-and-white mode and are applied only to the image area.	
001	ITB	[0~500/0.1 µa]
007	Side1:PTR	[-100~0/1 µa]
008	Side1:SepDC	[0~100/0.1 µa]
009	Side1:SepAC	[80~120/0.1 kV]
012	Side2:PTR	[-100~0/0.1 µa]
013	Side2:SepDC	[0~100/0.1 µa]
014	Side2:SepAC	[80~120/0.1 kV]

2756	Sp1 K Bias	Set Bias for Special Paper 1: K
	These SPs set the standard values of the electrical charges that are applied to 1) create bias for image transfer from drum of each color (Y, M, C, K) to the ITB, 2) create bias for image transfer from ITB to paper (PTR), and 3) neutralize the charges on the both sides of the paper to separate the paper from the ITB (SepDC, SepAC). These settings are used only for Y, M, C, K when printing on Special Paper 1 in the full-color mode and are applied only to the image area.	
001	ITB:K	[0~500/0.1 µa]
002	ITB:M	[0~500/0.1 µa]
003	ITB:C	[0~500/0.1 µa]
004	ITB:Y	[0~500/0.1 µa]
013	Side1:PTR	[-100~0/1 µa]
014	Side1:SepDC	[0~100/0.1 µa]
015	Side1:SepAC	[80~120/0.1 kV]
021	Side2:PTR	[-100~0/1 µa]
022	Side2:SepDC	[200~1000/0.1 µa]
023	Side1:SepAC	[80~120/0.1 kV]

Downloaded from www.Manualslib.com manuals search engine

These SPs (SP2761~SP2765) set the paper size correction coefficients for Special Paper 1 relative to the settings done with SP2308 (Set Psize Thresh). All of hese settings:

- Apply to printing on Special Paper 1 in the black-and-white mode
- Apply only to the image area

The title of each SP tells you the side and size where the setting is applied at ITB-to-paper transfer, for example: "Side1:Size1:PTR" means the setting applies to only the first side of Size 1 when the image is transferred from belt to paper.

2761	**Size Coeff:Sp1**	Size Correction Coefficient for Special Paper 1
007	Side1:Size1:PTR	SP2308 001 Threshold 1
012	Side2:Size1:PTR	[100~600/5%]
2762	**Size Coeff:Sp1**	Size Correction Coefficient for Special Paper 1
007	Side1:Size2:PTR	SP2308 002 Threshold 2, < SP2308 001 Threshold 1
012	Side2:Size2:PTR	[100~600/5%]
2763	**Size Coeff:Sp1**	Size Correction Coefficient for Special Paper 1
007	Side1:Size3:PTR	SP2308 003 Threshold 3, < SP2308 002 Threshold 2
012	Side2:Size3:PTR	[100~600/5%]
2764	**Size Coeff:Sp1**	Size Correction Coefficient for Special Paper 1
007	Side1:Size4:PTR	SP2308 004 Threshold 4, < SP2308 003 Threshold 3
012	Side2:Size4:PTR	[100~600/5%]
2765	**Size Coeff:Sp1**	Size Correction Coefficient for Special Paper 1
007	Side1:Size5:PTR	Up to SP2308 004 Threshold 4
012	Side2:Size5:PTR	[100~600/5%]

2771	**LEdge Cor:Sp1:K**	Leading Edge Correction for Special Paper 1: K
	Sets the leading edge correction coefficient when bias is applied as far as allowed by the seting of **SP2772** for drum to image transfer of the image during black and white copying on Special Paper 1.	
001	ITB	[0~400/5%]
007	Side1:PTR	
008	Side1:SepDC	
009	Side1:SepAC	
012	Side2:PTR	
013	Side2:SepDC	
014	Side2:SepAC	
2772	**LEdge SWT:Sp1:K**	Leading Edge Switch Timing for Special Paper 1: K
	Sets the switch OFF timing of **SP2771** . The selected value is the number of mm from the leading edge. Applies only to printing in black-and-white mode on Special Paper 1.	
001	ITB	[0~30/1 mm]
002	PTR	
003	SepDC	
004	SepAC	

Downloaded from www.Manualslib.com manuals search engine

2773	**TEdge Cor:Sp1 K**	Trailing Edge Correction for Special Paper 1: K
	Sets the bias applied at the trailing edge when the image is transferred from ITB to paper by setting the start timing for **SP2774 002** at the trailing edge. Applied to the trailing edge for black-and-white mode on Special Paper 1 only.	
007	Side1:PTR	[0~400/5%]
012	Side2:PTR	
2774	**TEdge SWT:Sp1 K**	Trailing Edge Switch Timing for Special Paper 1: K
	Sets the switch timing that determines the distance from the leading edge where the settings of **SP2773** is applied during image transfer from ITB to paper. Applied only when in black-and-white mode on Special Paper 1.	
002	PTR	[-100~0/1 mm]

2776	**LEdge Cor:Sp1 FC**	Leading Edge Correction for Special Paper 1: FC
	These SPs do the following settings when printing on Special Paper 1 in the full-color mode: 1) ITB: Sets strength/timing of the correction coefficient for the application of bias when the image is transferred from the drum to the ITB. 2) PTR: Sets the strength/timing of thecorrection coefficient for the application of bias when the image is transferred from ITB. 3) SepDC, SepAC: Set the strength/timing of the dc and ac charges applied to neutralize the charges on the belt and paper so they will separate more easily. **Note**: **SP2776** selects the strength of the bias coefficient, and **SP2777** sets the start timing of the bias application.	
001	ITB	[0~400/5%]
007	Side1:PTR	
008	Side1:SepDC	
009	Side1:SepAC	
012	Side2:PTR	
013	Side2:SepDC	
014	Side2:SepAC	
2777	**LEdge SWT:Sp1 FC**	Leading Edge Switch Timing for Special Paper 1: FC
	Sets the switch OFF timing of **SP2776**. The selected value is the number of mm from the leading edge. Applies only to printing in full-color mode on Special Paper 1.	
001	ITB	[0~30/1 mm]
002	PTR	
003	SepDC	
004	SepAC	

Downloaded from www.Manualslib.com manuals search engine

2778	**TEdge Cor:Sp1 FC – PTR**	Trailing Edge Correction for Special Paper 1: FC
	Sets the strength of the bias coefficient for the bias applied at the trailing edge when the image is transferred from ITB to paper. Applied when printing in full-color mode on Special Paper 1.	
007	Side1:PTR	[0~400/5%]
012	Side2:PTR	
2779	**TEdge SWT:Sp1 FC – PTR**	Switch Timing for Special Paper 1: FC
	Sets the switch timing that determines the distance from the leading edge where the **SP2778** settings are applied during image transfer from ITB to paper. Applied only when printing in full-color mode on Special Paper 1. [-100~0/1 mm]	

2781	**Sp1:K:LL**	Special Paper 1: K Low		
2782	**Sp1:K:ML**	Special Paper 1: K Medium Low		
2783	**Sp1:K:MM**	Special Paper 1: K Medium		
	These SPs set the paper size correction coefficient for the image to paper transfer bias threshold values calculated based on the reading of the absolute humidity from the temperature/humidity sensor and the thresholds set with **SP2304**. **SP2781** – Up to **SP2304 001:** Threshold 1 **SP2782** – More than **SP2304 001** Threshold 1, up to **SP2304 002** Threshold 2. **SP2783** – More than **SP2304 002** Threshold 2, up to **SP2304 003** Threshold 3. **SP2784** – More than **SP2304 003** Threshold 3, up to **SP2304 004** Threshold 4. **SP2785** – More than **SP2304 004** Threshold 4 These settings apply only to the image area printed on Special Paper 1 in black-and-white mode.			
		2781	**2782**	**2783**
007	Side1:PTR	[10~250/5%]	[10~250/5%]	[10~250/5%]
008	Side1:SepDC			
009	Side1:SepAC			
012	Side2:PTR	[10~250/5%]		
013	Side2:SepDC	[10~250/5%]		
014	Side2:SepAC			
2784	**Sp1:K:MH**	Special Paper 1: K Medium High		
2785	**Sp1:K:HH**	Special Paper 1: K High		
		2784	**2785**	
007	Side1:PTR	[10~250/5%]	[10~250/5%]	
008	Side1:SepDC		[10~250/5%]	
009	Side1:SepAC	[10~250/5%]	[10~250/5%]	
012	Side2:PTR	[10~250/5%]	[10~250/5%]	
013	Side2:SepDC			
014	Side2:SepAC			

Downloaded from www.Manualslib.com manuals search engine

2791	**Sp1:FC:LL**	Special Paper 1: FC Low		
2792	**Sp1:FC:ML**	Special Paper 1: FC Medium Low		
2973	**Sp1:FC:MM**	Special Paper 1: FC Medium		
	These SPs set the paper size correction coefficient for the image to paper transfer bias threshold values calculated based on the reading of the absolute humidity from the temperature/humidity sensor and the thresholds set with **SP2304**. **SP2791** – Up to **SP2304 001:** Threshold 1 **SP2792** – More than **SP2304 001** Threshold 1, up to **SP2304 002** Threshold 2. **SP2793** – More than **SP2304 002** Threshold 2, up to **SP2304 003** Threshold 3. **SP2794** – More than **SP2304 003** Threshold 3, up to **SP2304 004** Threshold 4. **SP2795** – More than **SP2304 004** Threshold 4 These settings apply only to the image area printed on Special Paper 1 in full-color mode.			
		2791	**2792**	**2973**
007	Side1:PTR	[10~250/5%]	[10~250/5%]	[10~250/5%]
008	Side1:SepDC			
009	Side1:SepAC			
012	Side2:PTR			
013	Side2:SepDC			
014	Side2:SepAC			
2794	**Sp1:FC:MH**	Special Paper 1: FC Medium High		
2795	**Sp1:FC:HH**	Special Paper 1: FC High		
		2794	**2795**	
017	Side1:PTR	[10~250/5%]	[10~250/5%]	
018	Side1:SepDC		[10~250/5%]	
019	Side1:SepAC	[10~250/5%]	[10~250/5%]	
027	Side2:PTR			
028	Side2:SepDC			
029	Side2:SepAC			

2801	**Sp2 K Bias**	Set Bias for Special Paper 2: K
	These SPs set the standard values of the electrical charges that are applied to 1) create bias for image transfer from drum to ITB, 2) create bias for image transfer from ITB to paper (PTR), and 3) neutralize the charges on the both sides of the paper to separate the paper from the ITB (SepDC, SepAC). These settings are used when printing on Special Paper 2 in the black-and-white mode and are applied only to the image area.	
001	ITB	[0~500/0.1 µa]
007	Side1:PTR	[-100~0/1 µa]
008	Side1:SepDC	[0~100/0.1 µa]
009	Side1:SepAC	[80~120/0.1 kV]
012	Side2:PTR	[-100~0/1 µa]
013	Side2:SepDC	[0~100/0.1 µa]
014	Side2:SepAC	[80~120/0.1 kV]

Downloaded from www.Manualslib.com manuals search engine

2806	Sp2 FC Bias	Set Bias for Special Paper 2: FC
	These SPs set the standard values of the electrical charges that are applied to 1) create bias for image transfer from drum of each color (Y, M, C, K) to the ITB, 2) create bias for image transfer from ITB to paper (PTR), and 3) neutralize the charges on the both sides of the paper to separate the paper from the ITB (SepDC, SepAC). These settings are used only for Y, M, C, K when printing on Special Paper 1 in the full-color mode and are applied only to the image area.	
001	ITB: K	[0~500/0.1 μA]
002	ITB: M	[0~500/0.1 μA]
003	ITB: C	[0~500/0.1 μA]
004	ITB: Y	[0~500/0.1 μA]
013	Side1:PTR	[-100~0/1 μA]
014	Side1:SepDC	[0~100/0.1 μA]
015	Side1:SepAC	[80~120/0.1 kV]
021	Side2:PTR	[-100~0/1 μA]
022	Side2:SepDC	[0~1000/0.1 μA]
023	Side2:SepAC	[80~120/0.1 kV]

These SPs (**SP2811**~**SP2815**) set the paper size correction coefficients for Special Paper 2 relative to the settings done with **SP2308** (Set Psize Thresh). All of hese settings:

- Apply to printing on Special Paper 2 in the black-and-white mode
- Apply only to the image area

The title of each SP tells you the side and size where the setting is applied at ITB-to-paper transfer, for example: "Side1:Size1:PTR" means the setting applies to only Side 1 of Size 1 when the image is transferred from belt to paper at the PTR.

2811	Size Coeff:Sp2	Size Correction Coefficient for Special Paper 2
007	Side1:Size 1 :PTR	SP2308 001 Threshold 1 [100~600/5%]
012	Side2:Size 1 :PTR	
2812	Size Coeff:Sp2	Size Correction Coefficient for Special Paper 2
007	Side1:Size2:PTR	SP2308 002 Threshold 2, < SP2308 001 Threshold 1 [100~600/5%]
012	Side2:Size2:PTR	
2813	Size Coeff:Sp2	Size Correction Coefficient for Special Paper 2
007	Side1:Size3:PTR	SP2308 003 Threshold 3, < SP2308 002 Threshold 2 [100~600/5%]
012	Side2:Size3:PTR	
2814	Size Coeff:Sp2	Size Correction Coefficient for Special Paper 2
007	Side1:Size4:PTR	SP2308 004 Threshold 4, < SP2308 003 Threshold 3 [100~600/5%]
012	Side2:Size4:PTR	
2815	Size Coeff:Sp2	Size Correction Coefficient for Special Paper 2
007	Side1:Size5:PTR	Up to SP2308 004 Threshold 4 [100~600/5%]
012	Side2:Size5:PTR	

Downloaded from www.Manualslib.com manuals search engine

2821	**LEdge Cor:Sp2:K**	Leading Edge Correction for Special Paper 2: K
	Sets the leading edge correction coefficient when bias is applied as far as allowed by the seting of **SP2822** for drum to image transfer of the image during black and white copying on Special Paper 2.	
001	ITB	[0~400/5%]
007	Side1:PTR	
008	Side1:SepDC	
009	Side1:SepAC	
012	Side2:PTR	
013	Side2:SepDC	
014	Side2:SepAC	
2822	**LEdge SWT:Sp2:K**	Leading Edge Switch Timing for Special Paper 2: K
	Sets the switch OFF timing of **SP2821**. The selected value is the number of mm from the leading edge. Applies only to printing in black-and-white mode on Special Paper 2.	
001	ITB	[0~30/1 mm]
002	PTR	
003	SepDC	
004	SepAC	

2823	**TEdge Cor:Sp2 K – PTR**	Trailing Edge Correction for Special Paper 2: K
	Sets the bias applied at the trailing edge when the image is transferred from ITB to paper by setting the start timing for **SP2824 002** at the trailing edge. Applied to the trailing edge for black-and-white mode on Special Paper 2 only.	
007	Side1:PTR	[0~400/5%]
012	Side2:PTR	
2824	**TEdge SWT:Sp2 K – PTR**	Trailing Edge Switch Timing for Special Paper 2: K
002	Sets the switch timing that determines the distance from the leading edge where the settings of **SP2823** is applied during image transfer from ITB to paper. Applied only when in black-and-white mode on Special Paper 2. [-100~0/5%]	

Downloaded from www.Manualslib.com manuals search engine

2826	**LEdge Cor:Sp2 FC**	Leading Edge Correction for Special Paper 2: FC
	These SPs do the following settings when printing on Special Paper 2 in the full-color mode: 1) ITB: Sets strength/timing of the correction coefficient for the application of bias when the image is transferred from the drum to the ITB. 2) PTR: Sets the strength/timing of thecorrection coefficient for the application of bias when the image is transferred from ITB. 3) SepDC, SepAC: Set the strength/timing of the dc and ac charges applied to neutralize the charges on the belt and paper so they will separate more easily. **Note**: **SP2826** selects the strength of the bias coefficient, and **SP2827** sets the start timing of the bias application.	
001	ITB	[0~400/5%]
007	Side1:PTR	
008	Side1:SepDC	
009	Side1:SepAC	
012	Side2:PTR	
013	Side2:SepDC	
014	Side2:SepAC	
2827	**LEdge SWT:Sp2 FC**	Leading Edge Switch Timing for Special Paper 2: FC
	Sets the switch OFF timing of **SP2826**. The selected value is the number of mm from the leading edge. Applies only to printing in full-color mode on Special Paper 2.	
001	ITB	[0~30/1 mm]
002	PTR	
003	SepDC	
004	SepAC	

2828	**TEdge Cor:Sp2 FC – PTR**	Trailing Edge Correction for Special Paper 2: FC
	Sets the strength of the bias coefficient for the bias applied at the trailing edge when the image is transferred from ITB to paper. Applied when printing in full-color mode on Special Paper 2.	
007	Side1:PTR	[0~400/5%]
012	Side2:PTR	
2829	**TEdge SWT:Sp2 FC – PTR**	Switch Timing for Special Paper 2: FC
	Sets the switch timing that determines the distance from the leading edge where the **SP2828** settings are applied during image transfer from ITB to paper. Applied only when printing in full-color mode on Special Paper 2. [-100~0/1 mm]	

Downloaded from www.Manualslib.com manuals search engine

2831	**Sp2:K:LL**	Special Paper 2: K Low		
2832	**Sp2:K:ML**	Special Paper 2: K Medium Low		
2833	**Sp2:K:MM**	Special Paper 2: K Medium		
	These SPs set the paper size correction coefficient for the image to paper transfer bias threshold values calculated based on the reading of the absolute humidity from the temperature/humidity sensor and the thresholds set with **SP2304 001**. **SP2831** – Up to **SP2304 001:** Threshold 1 **SP2832** – More than **SP2304 001** Threshold 1, up to **SP2304 002** Threshold 2. **SP2833** – More than **SP2304 002** Threshold 2, up to **SP2304 003** Threshold 3. **SP2834** – More than **SP2304 003** Threshold 3, up to **SP2304 004** Threshold 4. **SP2835** – More than **SP2304 004** Threshold 4 These settings apply only to the image area printed on Special Paper 2 in black-and-white mode.			
		2831	**2832**	**2833**
007	Side1:PTR	[10~250/5%]	[10~250/5%]	[10~250/5%]
008	Side1:SepDC			
009	Side1:SepAC			
012	Side2:PTR			
013	Side2:SepDC			
014	Side2:SepAC			
2834	**Sp2:K:MH**	Special Paper 2: K Medium High		
2835	**Sp2:K:HH**	Special Paper 2: K High		
		2834	**2835**	
007	Side1:PTR	[10~250/5%]	[10~250/5%]	
008	Side1:SepDC			
009	Side1:SepAC			
012	Side2:PTR			
013	Side2:SepDC			
014	Side2:SepAC			

Downloaded from www.Manualslib.com manuals search engine

2841	**Sp2:FC:LL**	Special Paper 2: FC Low		
2842	**Sp2:FC:ML**	Special Paper 2: FC Medium Low		
2843	**Sp2:FC:MM**	Special Paper 2: FC Medium		
	These SPs set the standard values of the electrical charges that are applied to 1) create bias for image transfer from drum to ITB, 2) create bias for image transfer from ITB to paper (PTR), and 3) neutralize the charges on the both sides of the paper to separate the paper from the ITB (SepDC, SepAC). These settings are used when printing on Special Paper 2 in the full-color mode and are applied only to the image area.			
		2841	**2842**	**2843**
017	Side1:PTR	[10~250/5%]	[10~250/5%]	[10~250/5%]
018	Side1:SepDC			
019	Side1:SepAC			
027	Side2:PTR			
028	Side2:SepDC			
029	Side2:SepAC			
2844	**Sp2:FC:MH**	Special Paper 2: FC Medium High		
2845	**Sp2:FC:HH**	Special Paper 2: FC High		
		2844	**2845**	
017	Side1:PTR	[10~250/5%]	[10~250/5%]	
018	Side1:SepDC	[10~250/5%]		
019	Side1:SepAC	[10~250/5%]	[10~250/5%]	
027	Side2:PTR		[10~250/5%]	
028	Side2:SepDC			
029	Side2:SepAC			

2851	**Sp3 K Bias**	Set Bias for Special Paper 3: K
	These SPs set the standard values of the electrical charges that are applied to 1) create bias for image transfer from drum to ITB, 2) create bias for image transfer from ITB to paper (PTR), and 3) neutralize the charges on the both sides of the paper to separate the paper from the ITB (SepDC, SepAC). These settings are used when printing on Special Paper 3 in the black-and-white mode and are applied only to the image area.	
001	ITB	[0~500/0.1 µa]
007	Side1:PTR	[-100~0/1 µa]
008	Side1:SepDC	[0~100/0.1 µa]
009	Side1:SepAC	[80~120/0.1 kV]
012	Side2:PTR	[-100~0/1 µa]
013	Side2:SepDC	[0~100/0.1 µa]
014	Side2:SepAC	[80~120/0.1 kV]

Downloaded from www.Manualslib.com manuals search engine

2856	Sp3 FC Bias	Set Bias for Special Paper 3: K
	These SPs set the standard values of the electrical charges that are applied to 1) create bias for image transfer from drum of each color (Y, M, C, K) to the ITB, 2) create bias for image transfer from ITB to paper (PTR), and 3) neutralize the charges on the both sides of the paper to separate the paper from the ITB (SepDC, SepAC). These settings are used only for Y, M, C, K when printing on Special Paper 3 in the full-color mode and are applied only to the image area.	
001	ITB:K	[0~500/0.1 µa]
002	ITB:M	[0~500/0.1 µa]
003	ITB:C	[0~500/0.1 µa]
004	ITB:Y	[0~500/0.1 µa]
013	Side1:PTR	[-100~0/1 µa]
014	Side1:SepDC	[0~100/0.1 µa]
015	Side1:SepAC	[80~120/0.1 kV]
021	Side2:PTR	[-100~0/1 µa]
022	Side2:SepDC	[0~1000/0.1 µa]
023	Side2:SepAC	[80~120/0.1 kV]

These SPs (**SP2861**~**SP2865**) set the paper size correction coefficients for Special Paper 3 relative to the settings done with **SP2308** (Set Psize Thresh). All of hese settings:

- Apply to printing on Special Paper 3 in the black-and-white mode
- Apply only to the image area

The title of each SP tells you the side and size where the setting is applied at ITB-to-paper transfer, for example: "Side1:Size1:PTR" means the setting applies to only Side 1 of Size 1 when the image is transferred from belt to paper at the PTR.

2861	Size Coeff:Sp3	Size Correction Coefficient for Special Paper 3
007	Side1:Size 1 :PTR	SP2308 001 Threshold 1 [100~600/5%]
012	Side2:Size 1 :PTR	
2862	Size Coeff:Sp3	Size Correction Coefficient for Special Paper 3
007	Side1:Size2:PTR	SP2308 002 Threshold 2, < SP2308 001 Threshold 1 [100~600/5%]
012	Side2:Size2:PTR	
2863	Size Coeff:Sp3	Size Correction Coefficient for Special Paper 3
007	Side1:Size3:PTR	SP2308 003 Threshold 3, < SP2308 002 Threshold 2 [100~600/5%]
012	Side2:Size3:PTR	
2864	Size Coeff:Sp3	Size Correction Coefficient for Special Paper 3
007	Side1:Size4:PTR	SP2308 004 Threshold 4, < SP2308 003 Threshold 3 [100~600/5%]
012	Side2:Size4:PTR	
2865	Size Coeff:Sp3	Size Correction Coefficient for Special Paper 3
007	Side1:Size5:PTR	Up to SP2308 004 Threshold 4 [100~600/5%]
012	Side2:Size5:PTR	

Downloaded from www.Manualslib.com manuals search engine

2871	**LEdge Cor:Sp3:K**	Leading Edge Correction for Special Paper 3: K
	Sets the leading edge correction coefficient when bias is applied as far as allowed by the seting of **SP2872** for drum to image transfer of the image during black and white copying on Special Paper 3.	
001	ITB	[0~400/5%]
007	Side1:PTR	
008	Side1:SepDC	
009	Side1:SepAC	
012	Side2:PTR	
013	Side2:SepDC	
014	Side2:SepAC	
2872	**LEdge SWT:Sp3:K**	Leading Edge Switch Timing for Special Paper 3: K
	Sets the switch OFF timing of **SP2871** . The selected value is the number of mm from the leading edge. Applies only to printing in black-and-white mode on Special Paper 3.	
001	ITB	[0~30/1 mm]
002	PTR	
003	SepDC	
004	SepAC	

2873	**TEdge Cor:Sp3 K – PTR**	Trailing Edge Correction for Special Paper 3: K
	Sets the bias applied at the trailing edge when the image is transferred from ITB to paper by setting the start timing for **SP2874 002** at the trailing edge. Applied to the trailing edge for black-and-white mode on Special Paper 3 only.	
007	Side1:PTR	[0~400/5%]
012	Side2:PTR	
2874	**TEdge SWT:Sp3 K – PTR**	Trailing Edge Switch Timing for Special Paper 3: K
002	Sets the switch timing that determines the distance from the leading edge where the settings of **SP2873** are applied during image transfer from ITB to paper. Applied only when in black-and-white mode on Special Paper 3. [-100~0/1 mm]	

Downloaded from www.Manualslib.com manuals search engine

2876	LEdge Cor:Sp3 FC	Leading Edge Correction for Special Paper 3: FC
	These SPs do the following settings when printing on Special Paper 3 in the full-color mode: 1) ITB: Sets strength/timing of the correction coefficient for the application of bias when the image is transferred from the drum to the ITB. 2) PTR: Sets the strength/timing of thecorrection coefficient for the application of bias when the image is transferred from ITB. 3) SepDC, SepAC: Set the strength/timing of the dc and ac charges applied to neutralize the charges on the belt and paper so they will separate more easily. **Note**: **SP2876** selects the strength of the bias coefficient, and **SP2877** sets the start timing of the bias application.	
001	ITB	[0~400/5%]
007	Side1:PTR	
008	Side1:SepDC	
009	Side1:SepAC	
012	Side2:PTR	
013	Side2:SepDC	
014	Side2:SepAC	

2877	LEdge SWT:Sp3 FC	Leading Edge Switch Timing for Special Paper 3: FC
	Sets the switch OFF timing of **SP2876**. The selected value is the number of mm from the leading edge. Applies only to printing in full-color mode on Special Paper 3.	
001	ITB	[0~30/1 mm]
002	PTR	
003	SepDC	
004	SepAC	

2878	TEdge Cor:Sp3 FC – PTR	Trailing Edge Correction for Special Paper 3: FC
	Sets the strength of the bias coefficient for the bias applied at the trailing edge when the image is transferred from ITB to paper. Applied when printing in full-color mode on Special Paper 3.	
007	Side1:PTR	[0~400/5%]
012	Side2:PTR	
2879	**TEdge SWT:Sp3 FC – PTR**	Switch Timing for Special Paper 3: FC
	Sets the switch timing that determines the distance from the leading edge where the **SP2878** settings are applied during image transfer from ITB to paper. Applied only when printing in full-color mode on Special Paper 3. [-100~0/1 mm]	

Downloaded from www.Manualslib.com manuals search engine

2881	**Sp3:K:LL**	Special Paper 3: K Low		
2882	**Sp3:K:ML**	Special Paper 3: K Medium Low		
2883	**Sp3:K:MM**	Special Paper 3: K Medium		
	These SPs set the paper size correction coefficient for the image to paper transfer bias threshold values calculated based on the reading of the absolute humidity from the temperature/humidity sensor and the thresholds set with **SP2304**. **SP2881** – Up to **SP2304 001:** Threshold 1 **SP2882** – More than **SP2304 001** Threshold 1, up to **SP2304 002** Threshold 2. **SP2883** – More than **SP2304 002** Threshold 2, up to **SP2304 003** Threshold 3. **SP2884** – More than **SP2304 003** Threshold 3, up to **SP2304 004** Threshold 4. **SP2885** – More than **SP2304 004** Threshold 4 These settings apply only to the image area printed on Special Paper 3 in black-and-white mode.			
		2881	**2882**	**2883**
007	Side1:PTR	[10~250/5%]	[10~250/5%]	[10~250/5%]
008	Side1:SepDC	[10~250/5%]		
009	Side1:SepAC			
012	Side2:PTR	[10~250/5%]	[10~250/5%]	
013	Side2:SepDC	[10~250/5%]	[10~250/5%]	
014	Side2:SepAC			
2884	**Sp3:K:MH**	Special Paper 3: K Medium High		
2885	**Sp3:K:HH**	Special Paper 3: K High		
		2884	**2885**	
007	Side1:PTR	[10~250/5%]	[10~250/5%]	
008	Side1:SepDC			
009	Side1:SepAC	[10~250/5%]	[10~250/5%]	
012	Side2:PTR	[10~250/5%]	[10~250/5%]	
013	Side2:SepDC			
014	Side2:SepAC			

Downloaded from www.Manualslib.com manuals search engine

2891	**Sp3:FC:LL**	Special Paper 3: FC Low		
2892	**Sp3:FC:ML**	Special Paper 3: FC Medium Low		
2893	**Sp3:FC:MM**	Special Paper 3: FC Medium		
	These SPs set the paper size correction coefficient for the image to paper transfer bias threshold values calculated based on the reading of the absolute humidity from the temperature/humidity sensor and the thresholds set with **SP2304**. **SP2891** – Up to **SP2304 001:** Threshold 1 **SP2892** – More than **SP2304 001** Threshold 1, up to **SP2304 002** Threshold 2. **SP2893** – More than **SP2304 002** Threshold 2, up to **SP2304 003** Threshold 3. **SP2894** – More than **SP2304 003** Threshold 3, up to **SP2304 004** Threshold 4. **SP2895** – More than **SP2304 004** Threshold 4 These settings apply only to the image area printed on Special Paper 3 in full-color mode.			
		2891	**2892**	**2893**
017	Side1:PTR	[10~250/5%]	[10~250/5%]	[10~250/5%]
018	Side1:SepDC	[10~250/5%]		[10~250/5%]
019	Side1:SepAC			[10~250/5%]
027	Side2:PTR	[10~250/5%]		[10~250/5%]
028	Side2:SepDC	[10~250/5%]		
029	Side2:SepAC			
2894	**Sp3:FC:MH**	Special Paper 3: FC Medium High		
2895	**Sp3:FC:HH**	Special Paper 3: FC High		
		2894	**2895**	
017	Side1:PTR	[10~250/5%]	[10~250/5%]	
018	Side1:SepDC	[10~250/5%]	[10~250/5%]	
019	Side1:SepAC	[10~250/5%]	[10~250/5%]	
027	Side2:PTR	[10~250/5%]	[10~250/5%]	
028	Side2:SepDC			
029	Side2:SepAC			

2901	**Disp T/H Sn:K_PCU**	Temperature/Humidity Sensor: PCU		
	This SPs display the the temperature (^{o}C) and humidity (both relative and absolute) readings of the temperature and humidity sensor located at the black PCU on the right side of the machine. These readings are updated every 60 sec. • 001~004 display the current readings. • 005~008 display the previous readings.			
001	Temp Disp	005	Temp:Prev	Range: 0~100/1 deg.
002	Rel Humidity Disp	006	Rel Humid:Prev	Range: 0~100/1% RH.
003	Abs Humidity Disp	007	Abs Humid:Prev	Range: 0~1000 g/m^3
004	Env Disp:Current	008	Env Disp:Prev	

2902	**Set Temp: K_PCU**	Set Temperature: PCU: Forced Setting
	Use these settings to turn OFF the temperature/humidity sensor, or set its level of detection. [0~5/1]	
	0: Sensor Detect	3: MM
	1: LL	4: MH
	2: ML	5: HH

Downloaded from www.Manualslib.com manuals search engine

2903	Env Thresh:K_PCU	Room Temperature Correction Threshold: PCU
	This SP sets the threshold value of LL and ML for the current room temperature.	
001	Abs Humid:Thresh1	[0~10,000 / 0.01 g/m^3]
002	Abs Humid:Thresh2	[0~10,000 / 0.01 g/m^3]
003	Abs Humid:Thresh3	[0~10,000 / 0.01 g/m^3]
004	Abs Humid:Thresh4	[0~10,000 / 0.01 g/m^3]

2904	Blade Bend Ctrl	Blade Bend Prevention Pattern Control
	A blade-bend prevention pattern is created with K toner on the ITB between every copy image to lubricate the ITB cleaning blade so it will not bend or scour the surface of the ITB. These SPs set 1) pattern creation interval, 2) density of the pattern, 3) whether the pattern is displayed. **Note**: This function is OFF. Changing this setting is normally not required for this machine.	
001	Pattern Interval	Sets the number of pages between patterns. [0~200/1 pg.]
002	Pattern Light	Sets the density of the pattern. [0~63/1]
003	Page Cnt Disp	Displays the count for the number of blade prevention patterns. [0~200/1 pg.]

2905	Used Toner Mtr 2	Used Toner Motor 2 (Waste toner distribution motor) Control
	The waste toner bottle is provided with a near-full sensor and an auger that evenly distributes the used toner inside the bottle. To extend the life of the waste toner distribution motor that rotates this auger, the motor and auger do not operate continuously. The motor is turned ON only after a prescribed amout of toner has been consumed.	
001	Toner Consumed	Sets the amount of toner to be used before the toner [1~10/1 g]
002	Waste Tnr M Time	Sets the amount of time the motor remains ON. [1~10/1 sec.]

Downloaded from www.Manualslib.com manuals search engine

Group 3000

3001	**TD Sn:Vt Display**	TD Sensor: Vt Display
	Displays the current value of Vt (output voltage of the TD sensor). This is the value that the machine uses to calculate the density of the toner in each development unit. The toner density is checked after every page prints. The TD sensor output voltage is inversely proportional to the toner density: • If toner density is high, the voltage is low. • If toner density is low, the voltage is high. **Note**: These readings are used to control toner supply. When the machine uses PID logic to control the machine (the default method selected with SP3301 001). The difference between Vt and Vtref is calculated and this result is used to control the on time of the subhopper clutches that control the supply of toner to the PCUs. For more see "Toner Supply Control" in Section "6.11.4 Details" of the Service Manual.	
001	Current Val:K	[0.00~5.00/00.00/0.1 V]
002	Current Val:M	
003	Current Val:C	
004	Current Val:Y	

3002	**Vtcnt:Disp/Set**	Display Vtcnt (TD Sensor Control Voltage)
	Use SP 3002-001 to 004 to display and confirm the present Vtcnt setting. Vtcnt is the TD sensor control voltage. If there is a large difference between this value and the value of SP3002-005 to 008 (Initial Vtcnt), this means that over time Vtcnt will require large adjustments due to environmental conditions. The initial value of Vtcnt is determined when the developer is initialized. This value is used as a reference to adjust Vt during the auto process control self check and when the TD sensor checks the toner density between pages.	
001	Current Val:K	[0~1200/0 V]
002	Current Val:M	
003	Current Val:C	
004	Current Val:Y	
005	Initial Val:K	[0~1200/0 V]
006	Initial Val:M	
007	Initial Val:C	
008	Initial Val:Y	

Downloaded from www.Manualslib.com manuals search engine

3003	Vtref:Disp/Set	Set/Display Vtref
	This SP displays the TD sensor target voltage. This target voltage is inversely proportional to the density of the toner: • If the target is high, toner density is lowered. • If the target is low, toner density is raised. The machine uses readings of the ID sensor patterns between pages to determine the amount of toner coverage and compared with the threhold values for the upper and lower limit of coverate. The result of this calculation is used to calculate Vtref. **Note**: Vtref is the TD sensor reference voltage. It is frequently updated to stabilize the toner concentration in the development unit.	
001	Current Val:K	[0~5.00/0 V]
002	Current Val:M	
003	Current Val:C	
004	Current Val:Y	
005	Initial Val:K	[0~5.00/0 V]
006	Initial Val:M	
007	Initial Val:C	
008	Initial Val:Y	

3021	Set Vt Shift	Set Vt Shift Amount
	Use this SP to correct Vt (TD sensor output voltage) in the low speed mode (128~256 g/m^2). The machine then uses this value to calculate Vt for low speed mode.	
001	Shift (Low Spd):K	[0~500/0 V]
002	Shift (Low Spd):M	
003	Shift (Low Spd):C	
004	Shift (Low Spd):Y	

Downloaded from www.Manualslib.com manuals search engine

3042	**Set Vtref Cor**	Set Vtref Correction
	Vtref is frequently updated in the toner supply cycle to stabiize the concentration of toner in the developer. Vtref is corrected between every printed page in the paper path using the correction amounts listed below for each color. This is the default setting (**0**) for SP3042 001. However, you can use this SP to switch this function OFF. Vtref (TD sensor reference voltage). It is frequently updated to stabilize the toner concentration in the development unit.	
001	Vtref Corr Mode	[0~1/1] **0:On**, 1:Off Setting this SP to **1** switches of Vtref correction between pages.
002	Corr Amt(+):k	[0~100/0 V]
003	Corr Amt(+):M	
004	Corr Amt(+):C	
005	Corr Amt(+):Y	
006	Corr Amt(-):k	[0~100/0 V]
007	Corr Amt(-):M	
008	Corr Amt(-):C	
009	Corr Amt(-):Y	
010	Vtref Corr Target:K	[-100~0/cm^2]
011	Vtref Corr Target:M	
012	Vtref Corr Target:C	
013	Vtref Corr Target:Y	
014	Corr Thresh:M	[-100~0/cm^2]
015	Corr Thresh:C	
016	Corr Thresh:Y	
017	Corr Thresh:K	

3101	**ID Pattern:Disp**	ID Sensor Pattern Coverage Display
	Displays the amount toner to be used (coverage) to create the ID sensor patterns between pages. The ID sensors cannot accurately detect the patterns if there is too much reflectivity from the black toner. This SP changes the solid ID sensor pattern to a hatched pattern. **Note**: **SP3171 001** sets detection and update timing for the creation of the ID sensor patterns.	
001	Applied:K	[0~2000/cm^2]
002	Applied:M	
003	Applied:C	
004	Applied:Y	

Downloaded from www.Manualslib.com manuals search engine

3111	**ID Sn:Voffset**	Voffset Value Detected by ID Sensor **DFU**
	Displays the output voltage of the directly reflected light when the LED of the ID sensor is switched OFF.	
001	Voffset_Reg:Col:F	[0~500/0 V]
002	Voffset_Dif:Col:F	
003	Voffset_Reg:K:R	

3121	**Adjusted Vsg**	Vsg Reading After Vsg Adjustment
	This SP displays the 1) results of the most recent Vsg adjustment, 2) averaged value of recent Vsg adjustments. This can be done for both ID sensors. The rear sensor is the black ID sensor (K) and the front sensor is the color ID sensor (Y,M,C).	
001	Vsg_Reg:Col:Last	[0~500/0 V]
002	Vsg_Dif:Col:Last	
003	Vsg_Reg:K:Last	
004	Vsg_Dif:K:Last	
005	Vsg_Reg:Col:Ave	
006	Vsg_Dif:Col:Ave	
007	Vsg_Reg:K:Ave	

3131	**Isfg After Vsg**	Ifsg After Reading Adjusted Vsg
	Displays as a PWM value (pulse width modulation) the level of the ID sensor LED after Vsg has been adjusted. Normal Vsg readings of the ITB bare surface reflectivity should be in the range 4.0±0.2V.	
001	Ifsg:Col:Ctr	[0~4096/1]
002	Ifsg:K:Last	
003	Ifsg:Col:Ave	**Not used**
004	Ifsg:K:Ave	**Not used**

3141	**ID Sn:Vmin**	Vmin Value Read by ID Sensor
	Displays the minimum values read from the 10-grade patterns read by the ID sensors during process control. The "Front" is the color ID sensor (Y,M,C), and the "Rear" is the black ID sensor.	
001	Vmin:Col(Front)	[0~500/0 V]
002	Vmin:K(Rear)	

3161	**Set ID Pattern**	Set ID Sensor Pattern
	Sets the toner coverage of black ID sensor pattern between sheets. During toner control the ID sensor pattern is created between the prescribed number of sheets (SP3171 001). [0~2/0.001 mg]	

3171	**ID Pattern:Int**	ID Sensor Pattern: Black Interval
	Sets the number of pages between which the ID sensor patterns are created on the ITB. Normally, the ID sensor patterns are created and read every 10 pages.	
001	Create Int:K	[0~100/1]
002	Create Int:M	
003	Create Int:C	
004	Create Int:Y	

Downloaded from www.Manualslib.com manuals search engine

3194	ID Coeff Display	ID Sensor Sensitivity Coefficient Display
	Displays the most recent and averaged readings of the sensitivity correction coeffients (K2 and K5).	
001	K2:Col:Last	[0~10000/0]
002	K5:Col:Last	
005	K2:Col:Ave	
006	K5:Col:Ave	

3251	Tnr Supply Time	Toner Calibration Time: Display
	Displays for confirmation the length of time the toner supply clutch remained on to send toner to the sub hopper after a new toner cartridge was installed.	
001	K	[0~10000/1 sec.]
002	M	
003	C	
004	Y	
005	Toner Pump CL:K	Use these SPs to display the accumulated drive time for each powder pump clutch before installing a new one. These SPs are reset to zero after the clutches are replaced.
006	Toner Pump CL:M	
007	Toner Pump CL:C	
008	Toner Pump CL:Y	

3301	Tnr Supply	Select Toner Supply Method
001	K	[0~1/1]
002	M	0: Fixed toner supply
003	C	**1**: PID Toner Supply
004	Y	

3302	Tnr Supply	Select Toner Supply Rate
	Sets the toner supply rate for fixed toner supply mode. The rate is set by adjusting the on time of the toner supply clutch. This setting is used only if SP3301 is set to "0".	
001	Supply Rate:K	[0~100 / 1 %]
002	Supply Rate:M	
003	Supply Rate:C	
004	Supply Rate:Y	

Downloaded from www.Manualslib.com manuals search engine

3303	Tnr Supply Rate	Toner Supply Rate: Display
	Displays for confirmation the toner supply rate of toner supply control using the PID method. The toner supply rate is calculated as: Toner Supply Rate = Toner Supply Time/Time Allowed for Toner Supply x 100 where: • Time is measured in msec. • "Time Allowed for Toner Supply (ms)" = Length of the paper (mm) + Width of the gap between sheets (mm)/Drum speed (mm/s) x 1000. **Note**: The toner supply control method is selected with SP3301.	
001	Last Val:K	[0~100/1%]
002	Last Val:M	
003	Last Val:C	
004	Last Val:Y	
005	Last 10 Ave:K	
006	Last 10 Ave:M	
007	Last 10 Ave:C	
008	Last 10 Ave:Y	

3304	Tnr SupplyLimits	Set Upper/Lower Limits for Toner Supply
	Sets the upper and lower limits for toner supply supply rate with the fuzzy logic (PID) used as the toner supply control method. This SP takes effect only if **1** or **2** is selected for **SP3301** to enable fuzzy logic as the toner supply method. The machine reads 1) the maximum and minimum settings of this SP and 2) the toner consumption of the output image surface (pixel count data). Then it calculates the maximum and minimum amount of toner for that image. After this is done, toner supply amount will not change during the job, even if Vt or any other measurement determines that more toner is necessary.	
001	Max Supply Rate:K	[0~100/1%]
002	Max Supply Rate:M	
003	Max Supply Rate:C	
004	Max Supply Rate:Y	
005	Min Supply Time:K	[0~1000/1 ms]
006	Min Supply Time:M	
007	Min Supply Time:C	
008	Min Supply Time:Y	

3306	Tnr Supply Coeff	Set Toner Supply Coefficient
	These SPs set the toner supply coefficients for the fuzzy logic method of toner supply control. **Note**: These SP codes operate only when **1** or **2** is selected for **SP3301**.	
001 – 004	Ratio Coeff1:K, M, C, Y	[0~4300/1]
021 – 024	P_Vt_Coeff:K, M, C, Y	[0~100/1%]
025 – 028	I_Vt_Coeff:K, M, C, Y	[0~1000/1]
029 – 032	Si:K, M, C, Y	[-500~500/**0**]
033 – 036	P_Px1_Coeff1:K, M, C, Y	[0~100/1%]
037 – 040	P_Px1_Coeff3:K, M, C, Y	[0~255/1]

Downloaded from www.Manualslib.com manuals search engine

3401	**TE Detect Set**	Detect/No Setting **DFU**
	These SP codes modify the operation of the toner end sensor. Switches toner end OFF and ON. [0~1/1] **0**:Detect, 1: No Detect	

3411	**TE Pgs Min:K**	
	Use this SP to set the number of pages to print after the toner near-end alert has been issued. Once the specified number of pages have printed, the machine issues the toner-end alert, and the machine will not operate until the toner supply has been replenished. **Note**: • There are two counters for toner end, page count (003~004) and pixel count (005~006). • The toner end alert is issued by whichever limit is exceed first, page count (003~004) or coverage (005~006).	
001	TE Sheets Min:K	Sets the minimum number of pages to print (black or color) after the toner near-end alert until toner end. [0~50/1]
002	TE Sheets Min:Col	
003	TE Sheets Max:K	Sets the maximum number of pages to print (black-and-white, or full-color) after the toner near-end alert until toner end, based on page count (regardless of coverage). [0~1000/1]
004	TE Sheets Max:Col	
005	TE:Pixels:K	Sets the number of images to print (black-and-white or full-color) after the toner near-end alert until toner end based on coverage (30 A4/LT pages at 100% coverage). [0~100/1]
006	TE:Pixels:Col	
007	TNE:Sheets:K	Sets the number of times that the toner supply clutch is activated when toner is low, to detect the toner end condition. [0~30/1]
008	TNE:Sheets:Col	

Downloaded from www.Manualslib.com manuals search engine

3501	**Select ProCon**	Select Process Control Method
	The settings of these SP codes modify the operation of the automatic process control self-check. Automatic process control is done at these times: • When the machine is turned ON • At the end of the job, if the number of pages since the previous process contro, exceeds the value of SP 3551 • Before ACC adjustment • When the developer is initialized with SP3811. For more about process control, see "Process Control" in Section "6.11" of the service manual.	
001	Potential Control	
	[0~1/1] **0:Auto**, 1:Fixed When the machine starts (with the front door closed), the process control self-check begins using as referernce bias voltages set with the Group 3 SP codes. The referenced voltages are different, depending on whether "Auto" or "Fixed" is set:	
	Referenced SPs with "Auto" Selected	
	SP3575 000~008	Dev DC Control
	SP3576 000~008	Chrg DC Control
	SP3577 000~008	Chrg AC Control
	SP3581 000~008	LD Power Control
	SP3551 001, 002	Procon Int
	SP3554 001	Init ProCon Set
	SP3801 001	DevSetup Execute
	SP3811 001~006	DevSetup Execute
	Reference SPs with "Fixed" Selected	
	SP2201 001~009	Set DC Charge
	SP2202 001~009	Set AC Charge
	SP2211 001~009	Set LD Power
	SP2212 001~009	Set Dev DC
002	Potential Ctrl	Switches process control gamma correction OFF (0) and ON (1). [0~1/1]
003	Density Adj Mode	Sets the execution timing of toner density adjustment with the automatic process control self-check. [0~2/1] 0: Do not execute, 1: 1st Power On, 2:1st Power On & Job End
004	ACC Before ProCon	Determines whether process control is executed before a gradation test pattern is printed using the operation panel with: [User Tools]> Maintenance> Auto Color Calibration [0~2/**2**] 0:Do not execute 1:Execute Potential Control 2:Execute Potential Control and Toner Density Adjustment
005	Dnstiy Adj Times	Sets the upper limit of the loop wherein density is adjusted during process control. Default: 10

Downloaded from www.Manualslib.com manuals search engine

006	DevGamma(EnvCorrct)	Switches correction of the development gamma adjustment with the readings of the temperature/humidity sensor OFF and ON. Press either the "OFF" or "ON" button to toggle the setting.
007	DevGamma(TimeCorrct)	Switches the timing of the development gamma adjustment during process control OFF and ON. Press either the "OFF" or "ON" button to toggle the setting.

3511	**Poten Tbl:Disp**	Display Potential Table
	Displays the numbers in the Potential Table selected for process control. The Potential Table is the lookup table that contains the potential target values (Vd, Vb, Vl) for adjustment of the development potential. • Vd: Initial charge applied to the drum by the charge roller. • Vb: Development bias • Vl: Value used to correct the strength of the lasers. A 10-grade pattern is first created on the drum and then transferred to the ITB: • On the drum, the potential sensor uses their readings of this pattern to determine development potential. • On the ITB, the ID sensors use their readings of this pattern to determine the amount of toner coverage necessary. For more about process control, see "Process Control" in Section "6.11" of the Service Manual	
001	K Value	Displays the current numbers in the Potential Table for each color. [1~99/1]
002	M Value	
003	C Value	
004	Y Value	
005	Target: K	Displays the target values for Vd✱, Vb✱, Vl✱ after measurements of ambient conditions and compensating for residual charge on the drum (Vr). If the actual development gamma is less than the target development gamma, this SP shows a smaller value than the selected pointer table value. If the actual development gamma is greater than the target development gamma, this SP shows a larger value than the selected pointer table value. [1~99/1]
006	Target: M	
007	Target: C	
008	Target: Y	
009	Initial: K	Not used at this time (March 2005).
010	Initial: M	
011	Initial: C	
012	Initial: Y	

Downloaded from www.Manualslib.com manuals search engine

3531	ProCon Target	Set Target Amount for Process Control
	This SP sets the value for the maximum coverage to be achieved by the process control self-check. Process control then analyzes the readings of the 10-grade pattern, calculates the potentials required for develoment gamma and Vk (starting voltage), and then determines the drum charge levels, development biases, and LD power levels necessary to achieve the target coverage. **Note** • This SP can be used to darken printed images. • After this SP is changed, process control must be executed manually with SP3820.	
001	Max Tnr Amt:K	[0~1000/cm^2]
002	Max Tnr Amt:M	
003	Max Tnr Amt:C	
004	Max Tnr Amt:Y	

3551	ProCon Int	Set Interval Between Process Control Executions
	This SP sets timing of the process control self-check for job end. Normally, process control executes automatically after 250 jobs. The process control self-check never interrupts a job to execute, even if it is time for the next self-check.	
001	B/W Mode	[0~2000/1]
002	Color Mode	[0~2000/1]

3554	Init ProCon Set	Set Process Control for 1st Power On
001	Sets fusing temperature threshold for execution of the process control self-check execution after a cold start. If the machine is switched OFF and then switched ON again, the automatic process control self-check will not execute if the fusing temperature remains above 100 °C (default). **Note**: Use SP3554 001 to display the results of the process control self-check. [0~150/1 deg C]	

3561	Dev γ:Disp/Set	Set/Display Gamma Value for Development
	Displays the value of development gamma, an indicator of development capacity. In order for the machine to determine the development potential to obtain the target coverage. During processing control the 10-grade patterns are created first on the drums and then on the ITB. The potential sensors read the development potential, and the ID sensors read the amount of coverage on the ITB. Plotting the development potential on the X axis against coverage on the Y-axis results in the development gamma curve. For more, see "Process Control" in Section "6.11 Details". The normal range for development gamma is greater than 0.3 and less than 6.0.	
001	Actual Val:K	[0.00~6.00/0.1]
002	Actual Val:M	
003	Actual Val:C	
004	Actual Val:Y	
005	Target Val:K	
006	Target Val:M	
007	Target Val:C	
008	Target Val:Y	
009	Initial Val: K	
010	Initial Val: M	
011	Initial Val: C	
012	Initial Val: Y	

Downloaded from www.Manualslib.com manuals search engine

3562	**Display Vk**	Display Vk (Development Start Voltage)
	Displays Vk, the development start voltage. This development start voltage is used to indicate whether the developer has deteriorated. However, this is only a rough measurement due to other factors: • A low threshold setting for the target development gamma. • Operational variations between machines • Precision of the ID sensor measurements Normal range for Vk: -150V to +150V	
3563	**Display Vr**	Display Vr (Residual Potential)
	Vr is the potential that remains on the surface of the drum after full exposure to the laser. The existence of this residual voltage is used as an indicator to determine the level of deterioration of the drum. Vr becomes larger as the drum deteriorates. Normal range for Vr: -200V to 0V	
001	K	[-300 to +300/1 V]
002	M	
003	C	
004	Y	

3571	**Display V0**	Display Vd (Value for Control of Charge Potential)
	Displays the value for **V0**, the measure of drum potential on dark areas of the drum before laser exposure. Normal range: -700 V to –500 V	
001	K	[-999~0/1 V]
002	M	
003	C	
004	Y	

3572	**Display Vdhome**	Display Vl (Value for Control of Halftone Drum Potential)
	Displays the value for **Vdhome**, the electrical potential of the drum after a fixed dc bias (dc –700V) is applied by the drum charge roller. Normal range: -700V to –500V	
001	Vl Ctrl:Half:K	[-999~0/1 V]
002	Vl Ctrl:Half:M	
003	Vl Ctrl:Half:C	
004	Vl Ctrl:Half:Y	

Downloaded from www.Manualslib.com manuals search engine

3573	Target Poten:Vd	Display Target Potential (VdDisplay)
	Vd (read by the potential sensor) is the potential of dark areas of a drum before full laser exposure. This SP displays the value of Vd used by processing control to determine the target potential (Vd). The machine performs a calculation using development gamma, Vk and the maximum coverage, and then uses the result to lookup and retrieve the correct voltage from the Potential Table. This retrieved value is used to raise the charge of the charge roller that charges the drums.	
3574	**Target Poten:Vl**	Display Target Potential (VlDisplay)
	Vl (read by the potential sensor) is the potential of the exposed areas after full laser exposure. This SP displays the value of Vl used by processing control to determine the target potential (Vl). The machine performs a calculation using development gamma, Vk and the maximum coverage, and then uses the result to lookup and retrieve the correct voltage from the Potential Table. This retrieved value is used to raise the input current of the laser diode.	
001	K	[-999~0/1 V]
002	M	
003	C	
004	Y	

3575	Dev DC Control	Display Value for Control of Development DC
	Displays the deveopment bias that was referenced duing processing control and used in the the previous jobs (Process control is set for **Auto** with **SP3501 001**.)	
001	Std Spd:K	[-800~0/1 V] Std Spd (normal speed): 52 to 128 g/m^2
002	Std Spd:M	
003	Std Spd:C	
004	Std Spd:Y	
005	Low Spd:K	[-800~0/1 V] Low Spd (half-speed): Paper weight 128 o 256 g/m^2
006	Low Spd:M	
007	Low Spd:C	
008	Low Spd:Y	

3576	Chrg DC Control	Display Value for Control of Charge Roller Bias DC
001	Std Spd:K	[-999 to –200/1 V] Std Spd (normal speed): 52 to 128 g/m^2
002	Std Spd:M	
003	Std Spd:C	
004	Std Spd:Y	
006	Low Spd:K	[-999 to –200/1 V] Low Spd (half-speed): Paper weight 128 o 256 g/m^2
007	Low Spd:M	
008	Low Spd:C	
009	Low Spd:Y	

Downloaded from www.Manualslib.com manuals search engine

3577	Chrg AC Control	Display Value for Control of Development AC
	Displays the ac bias that was referenced during processing control and used in the previous jobs. (Process control is set for **Auto** with **SP3501 001**.)	
001	Std Spd:K	[0~300/0 kV] Std Spd (normal speed): 52 to 128 g/m^2
002	Std Spd:M	
003	Std Spd:C	
004	Std Spd:Y	
006	Low Spd:K	[0~300/0 kV] Low Spd (half-speed): Paper weight 128 o 256 g/m^2
007	Low Spd:M	
008	Low Spd:C	
009	Low Spd:Y	

3581	LD Power Control	Display Value for Control of LD Power
	Displays the LD power that was referenced during processing control and used in the previous jobs. (Process control is set for **Auto** with **SP3501 001**.)	
001	Std Spd:K	[-117~127/1] Std Spd (normal speed): 52 to 128 g/m^2
002	Std Spd:M	
003	Std Spd:C	
004	Std Spd:Y	
006	Low Spd:K	[-117~127/1] Low Spd (half-speed): Paper weight 128 o 256 g/m^2
007	Low Spd:M	
008	Low Spd:C	
009	Low Spd:Y	

3605	Factory Files	Set Up Developer **DFU**

3701	Small Img Mode	Set Small Image Mode
	This feature is not presently not used in process control (March 2005) [0~1/1]	

Downloaded from www.Manualslib.com manuals search engine

3801	Init TD Sensor	Execute TD Sensor Initialization
	Do this SP after replacing the developer in one or more of the PCUs when servicing the machine. This SP: • Checks for the presence of developer in the development unit. (This ensures that the film seal has been removed from the developer pack.) • Initializes TD sensor. (Calibrates Vtcnt). • Calibrates development gamma and calibrates toner density. Also does the MUSIC check and correction. **Note**: Never do TD sensor initializations SP3801 – 001 to 006 after SP3811 – 001 (Developer Set Up). See also the relating pages/chapters 1-32, ch.3.1.6 and ch.3.5.7.	
001	All Colors (Y, M, C, K)	[0~1/1]
002	Col (Y, M, C)	
003	K	
004	M	
005	C	
006	Y	

3802	TD Sn Init OK?	Display Result of TD Sensor Initialization
	This SP displays the results of the TD sensor initialization with **SP3801 001~006**. The machine returns the status of the previous initialization with numbers, 1 digit for each PCU. The numbers are read in order as "K, M, C, Y". Four numbers are used to indicate the status of the execution. 1: OK (success) 2: Cancelled (door opened, etc.) 4: Not executed (not selected for execution; this is not an error) 9: Vtcnt abnormal. Vtcnt (TD sensor control voltage) could not be adjusted to within 2.5±0.2V. The machine issued a TD sensor error for the PCU where there is a problem (SC372~SC375).	

3810	ClngInitSetExe	Initial Cleaning After Replacement
	These SPs should be executed after replacement of the drum cleaning roller or cleaning blade.	
001	All Colors	
002	Col	Excludes K (Black)
003	K	Allows adjusment of colors separately.
004	M	
005	C	
006	Y	

Downloaded from www.Manualslib.com manuals search engine

3811	DevSetup Execute	Execute Developer Setup
	Do this SP during the installation procedure after the developer and toner cartridges have been installed in the machine, or after the drum and cleaning blade have been replaced. This SP: • Confirms that all the seals have been removed from each developer cartridge and developer is present in each PCU. • Switches ON toner supply and sends toner to the sub hopper of each PCU. • Sends toner to the PCU to coat the drum with toner. This prevents the cleaning blades from bending and scouring the drums. • Initializes the TD sensor. • Starts the process control self-check to set the target for development gamma and adjusts toner density. • Starts the MUSIC sequence to check and correct color image offset. **Note**: • After doing **SP3811** always to **SP3812** to confirm that **SP3811** executed correctly. • **SP3811 001** is done only at machine installation, or after a drum and cleaning blade has been replaced in the PCU. • **SP3801 001 to 006** is done after developer replacement for one or more PCUs. • Never do TD sensor initializations SP3801 – 001 to 006 after SP3811 – 001 (Developer Set Up). See also the relating pages/chapters 1-32, ch.3.1.6 and ch.3.5.7.	
001	Devr Setup:All	[0~1/1]
002	Devr Setup:Col	
003	Devr Setup:K	
004	Devr Setup:M	
005	Devr Setup:C	
006	Devr Setup:Y	

3812	DevSetup Execute	Display Result of Developer Setup Execution
	Do this SP to confirm that SP3811 executed correctly. After execution the machine displays a "1" to confirm that SP3811 executed correctly for each PCU. The "1111" display indicates the return value for each PCU: K, M, C, Y	

3813	Used Tnr Mode Exe	Used Toner Mode Execute
	When the machine is printing in full-color mode, the waste toner in the PCUs are transported to the waste toner bottle for the amount of time specified with **SP3813 003** below	
001	All Colors	[0~1/1] 0:Off, 1: On
002	K Only	
003	Set Op. Time	[10~240/1 sec.]

Downloaded from www.Manualslib.com manuals search engine

3820	Manual ProCon	Execute Process Control Manually
	Use this SP to execute process control manually. 3820 001 does potential control only. 3820 002 does potential control and toner density adjustment. Note: • You must do SP3820 to enable any values you change with SP3531 (Procon Target). • Use SP3561 to display the resuls of SP3820 execution.	
001	Normal ProCon	[0~0/1]
002	Exe Density Adj	

3821	ProCon OK?	Display Result of Process Control Execution	
	Use this SP to display the history of process control executions. These SP codes are used to troubleshoot processing control. For more, see "4.2.4 Process Control Troubleshooting" in Section "4. Troubleshooting". [0~99999999/1]		
001	History:Last	006	History:Last 6
002	History:Last 2	007	History:Last 7
003	History:Last 3	008	History:Last 8
004	History:Last 4	009	History:Last 9
005	History:Last 5	010	History:Last 10

3891	Set ProCon Send	Set Up Sending Process Control Data to NRS Center
	This feature is not presently used. (March 2005) [0~1/1]	

3900	RsetProConSP	Reset All Process Control SP Codes
	Do this SP to reset all process control related SP codes to their default values.	

Downloaded from www.Manualslib.com manuals search engine

Group 4000

4008	**Sub Scan Mag**	Sub Scan Magnification Adjustment
	Adjusts the sub-scan magnification by changing the scanner motor speed. [-10~+10/0.1%]	

4010	**Sub Scan Reg**	Sub Scan Registration Adjustment
	Adjusts the leading edge registration by changing the scanning start timing in the sub-scan direction. [-30~+30/0.1 mm]	

4011	**Main Scan Reg**	Main Scan Registration Adjustment
	Adjusts the side-to-side registration by changing the scanning start timing in the main scan direction. **Note**: This adjustment is done for the ADF with **SP6006** (ADF Reg. Adj.). [-25~+25/0.1 mm]	

4012	**Set Scale Mask**	Set Mask for Scale Edge
	Sets the blank margin at each side for erasing the original shadow caused by the gap between the original and the scale. This can be done for both scanning on the exposure glass (book mode) and the ADF (ADF) for the leading and trailing edges.	
001	Book:Sub LEdge	[0~30/0.1 mm]
002	Book:Sub TEdge	
003	Book:Main:LEdge	
004	Book:Main:TEdge	
005	ADF:Sub:LEdge	
007	ADF:Main:LEdge	
008	ADF:Main:TEdge	

4013	**Scan Free Run**	Free Run: Scanner
	Performs the scanner free run with the exposure lamp ON or OFF for full-color, full size (A3 or DLT).	
001	Lamp:OFF	[0~1/1] 0:Off, 1:On
002	Lamp:ON	

4014	**Scan**	Execute Scan **DFU**
	These SPs enable/disable detection of the scanner at its home position.	
001	Enable	Enables detection of the scanner at its home position.
002	Disable	Disables detection of the scanner at its home position.

Downloaded from www.Manualslib.com manuals search engine

4020	Dust Check	Set for Dust Check on ADF Exposure Glass
	These SP codes adjust the dust check operation at the ADF scanning glass and the white scanning belt. **Note**: Dust that triggers a warning could be removed from the glass by the originals in the feed path. If the dust is removed by passing originals, this is not detected and the warning remains on.	
001	Dust Detect:On/Off	Switches the dust warning ON and OFF. When this SP is ON, a warning is issued if the check detects dust on the ADF scan glass or the white plate above the scanning glass. Always clean the ADF scanning glass and white plate before turning this SP ON. [0~1/1] 0:Off, 1:On
002	Dust Detect:Lvl	Adjusts the sensitivity of the check. If you see black streaks in copies when no warning has been issued, raise the setting to increase the level of sensitivity. If warnings are issued when you see no black streaks in copies, lower the setting. [0~8/1]
003	Dust Reject:Lvl	Sets the level for vertical line correction caused by dust. A high setting can eliminate unwanted vertical lines caused by dust but it can also thin vertical lines of the original. [0~4/1]

4205	B/W ADS Lvl	Black-and-White ADS Level
	This SP sets the background level for black-and-white ADS. ADS mode detects the background level of the original, also known as the peak white level, and removes this from the image to make a white background. This setting initializes the SBU at power ON. [-128~+127/1]	

4301	APS Confirm	Confirm Correct Operation of APS
	This SP confirms and displays the threshold for operation of the APS mode. [0~255/1]	

4303	APS Min Size	Set Minimum Size for APS Operation
	Sets the minimum size that the will be detected by APS [0~2/1] 0:No, 1:A5-S / ST-S, 2:A5-L / ST-L	

4305	8K/16K Detect	8K/16K Detection
	This SP enables the machine to recognize 8K/16K size paper automatically. [0~1/1] 0: Off, 1: On	

Downloaded from www.Manualslib.com manuals search engine

4400	Org Edge Mask	Set the Mask for Original
	This SP sets the area to be masked during platen (book) mode scanning.	
001	Book:Sub:LEdge	[0~30/0.1 mm]
002	Book:Sub:TEdge	
003	Book:Main:LEdge	
004	Book:Main:Tedge	
005	ADF:Sub:LEdge	
007	ADF:Main:TEdge	
008	ADF:Main:TEdge	

4417	IPU Test Pattern	Set IPU Test Pattern		
	Use this SP to select the IPU test pattern to print.			
	Test Pattern	[0~24/1]		
	0	Scanned Image	13	Grid Pattern CMYK
	1	Gradation Main Scan A	14	Color Patch CMYK
	2	Gradation Main Scan B	15	Gray Pattern (1)
	3	Gradation Main Scan C	16	Gray Pattern (2)
	4	Gradation Main Scan D	17	Gray Pattern (3)
	5	Gradation Sub Scan 1	18	Shading Pattern
	6	Grid Pattern	19	Thin Line Pattern
	7	Slant Grid Pattern	20	Scanned + Grid Pattern
	8	Gradation RGBCMYK	21	Scanned + Grayscale
	9	UCR Pattern	22	Scanned + Color Patch
	10	Color Patch 16 (1)	23	Scanned + Slant Grid C
	11	Color Patch 16 (2)	24	Scanned + Slant Grid D
	12	Color Patch 16 64		

4440	Saturation Adj	Adjust Color Saturation
	This SP adjusts the saturation level for copying. [0~5/1] 0: High 1: Lowest 2: Lower 3: Default 4: Higher 5: Highest	

Downloaded from www.Manualslib.com manuals search engine

4501	ACC Target Den	ACC Target Notch Density
	This SP sets the target density for the ACC adjustment for machines connected with the Copy Connector (B328). For more see "4.2.5 Color Adjustment for Connected Copiers".	
001	Copy:K:Text	[0~50/1]
002	Copy:C:Text	
003	Copy:M:Text	
004	Copy:Y:Text	
005	Copy:K:Photo	
006	Copy:C:Photo	
007	Copy:M:Photo	
008	Copy:Y:Photo	

4505	ACC Cor:Bright	ACC Correction: Bright Areas
	Sets correction for bright areas for ACC correction. For more see "4.2.5 Color Adjustment for Connected Copiers".	
4506	ACC Cor:Dark	ACC Correction: Dark Areas
	Sets correction for dark areas for ACC correction.	
001 – 004	Master:K, M, C, Y	[-128~+128/1]
005 – 008	Slave:K, M, C, Y	

4540	Print Coverage	Print Coverage Correction
	This SP corrects printer coverage of 12 hues (RY, YR, YG, etc. x 4 Colors (K, C, M, Y) for a total of 48 parameters.	
001 – 004	RY:K, C, M, Y	[-128~+128/1]
005 – 008	YR:K, C, M, Y	
009 – 012	YG:K, C, M, Y	
013 – 016	GY:K, C, M, Y	
017 – 020	GC:K, C, M, Y	
021 – 024	CG:K, C, M, Y	
025 – 028	CB:K, C, M, Y	
029 – 032	BC:K, C, M, Y	
033 – 036	BM:K, C, M, Y	
037 – 040	MB:K, C, M, Y	
041 – 044	MR:K, C, M, Y	
045 – 048	RM:K, C, M, Y	
049 – 052	W:K, C, M, Y	
053 – 056	K:K, C, M, Y	

Downloaded from www.Manualslib.com manuals search engine

These SPs (**SP4550~SP4562**) allow adjustments for the MTF(Modulation Transfer Function) level, smoothing, brightness and contrast of the scanning applications used on the document server (scan-to-email, scan-to-folder).

4550	**SApli:TxtPrt**	Scanner Application: Text (Print)
4551	**SApli:TxtOCR1**	Scanner Application: Text (OCR)
4552	**SApli:TxtOCR2**	Scanner Application: Text (OCR: Dropout Color)
4553	**SApli:T/P**	Scanner Application: Text/Photo
4554	**SApli:Photo**	Scanner Application: Photo
4555	**SApli:Gray**	Scanner Application: Grayscale
4558	**SApli:Col:T/P**	Scanner Application: Color Text/Photo
4559	**SApli:Col:PPr**	Scanner Application: Color Photo Paper
4560	**SApli:sRGB:T/P**	Scanner Application: sRGB Text/Photo
4561	**SApli:sRGB:PPr**	Scanner Application: sRGB Color Photo Paper
4562	**SApli:Auto Col**	Scanner Application: Auto Color
005	MTF Lvl:0-15	Sets the MTF level (Modulation Transfer Function) designed to improve image contrast. Set higher for stronger effect, lower for weaker effect. [0~15/1]
006	Smooth:0-7	Use to remove "jaggies" if they appear. Set higher for smoother. [0~7/1]
007	Brightness:1-255	Set higher for darker, set lower for lighter. [1~255/1]
008	Contrast:1-255	Set higher for more contrast, set lower for less contrast. [1~255/1]

4600	**Display SBU ID**	Display the ID of the SBU **DFU**
	Use this SP to read the SBU ID (includes VSBCNT_ID). If the ID is abnormal, this will generate SC144.	
001	Board&VSBCNT	
002	DAGL	

4603	**Do AGC**	Execute AGC **DFU**
	This SP executes automatic gain control (AGC) for HP detection.	
001	HP Detect:Enable	[0~1/1] 0:Off, 1:On
002	HP Detect:Disable	

4604	**Open/Close FGATE**	Open/Close FGATE **DFU**
	This SP opens and closes scanner FGATE. (FGATE is the laser write signal.) [0~1/1] 0:Off, 1:On	

Downloaded from www.Manualslib.com manuals search engine

4609	**White Plate:R**	Standard White Plate Adjustment: Red **DFU**
4610	**White Plate:G**	Standard White Plate Adjustment: Green **DFU**
4611	**White Plate:B**	Standard White Plate Adjustmetn: Blue **DFU**
	This SP codes display the reference voltages stored in NVRAM at the factory for Red, Green, and Blue before the machine was shipped. The SBU acquires these settings every time the machine is switched ON. [-256~+255/1]	

4628	**Gain Adj Range:R**	Gain Adjustment Range: R **DFU**
4629	**Gain Adj Range:G**	Gain Adjustment Range: G **DFU**
4630	**Gain Adj Range:B**	Gain Adjustment Range: B **DFU**
	When switched ON, these SP display the current range for the gain of RED, GREEN, and BLUE in the ASCI on the SBU after white level adjustment every time the machine is switched ON.	
001	Color	[0~1/1]
002	B/W	

4631	**Gain Adj Range:R**	Gain Adjustment Range: R **DFU**
	When switched ON, this SP displays the current range for the E (EVEN) or O (ODD) gain of RED in the ASCI on the SBU after white level adjustment every time the machine is switched ON.	
001	RE	[0~1/1]
002	RO	

4632	**Gain Adj Range:G**	Gain Adjustment Range: G **DFU**
	When switched ON, this SP displays the current range for E (EVEN) or O (ODD) gain of GREEN or B/W in the ASCI on the SBU after white level adjustment every time the machine is switched ON.	
001	Color:GE	[0~1023/1]
002	Color:GO	
005	B/W:GE	
006	B/W:GO	

4633	**Gain Adj Range:B**	Gain Adjustment Range: B **DFU**
	When switched ON, this SP displays the current range for E (EVEN) or O (ODD) gain of BLUE in the ASCI on the SBU after white level adjustment every time the machine is switched ON.	
001	BE	[0~1023/1]
002	BO	

4641	**White Lvl Loop**	White Level Loops **DFU**
	Displays the number of loops done color correction for AGC (Automatic Gain Correction) during white level adjustment.	
001	Color	[0~1023/**1**]
002	B/W	

Downloaded from www.Manualslib.com manuals search engine

4646	**Scan Auto Error**	Error Flag for Automatic Adjustment: Scanning **DFU**
	This SP sets the error flag to display as the SBU is updated automatically when the machine is switched ON.	
001	Gain	[0x00~0xFFFF]
002	K Level	
	b7	GAIN_ERR_BO
	b6	GAIN_ERR_BE
	b5	GAIN_ERR_BK_GO
	b4	GAIN_ERR_BK_GE
	b3	GAIN_ERR_GO
	b2	GAIN_ERR_GE
	b1	GAIN_ERR_RO
	b0	GAIN_ERR_RE

4647	**HW Error Flag**	Hardware Error Flag Adjustment: Scanning **DFU**
	This SP sets the error flag to confirm machine ON processing when the machine is switched ON. [0x00~0x3F]	

4680	**Fact Gain Adj:R**	Factory Gain Adjustment at Factory: Red **DFU**
	When switched ON, this SP displays the setting done at the factory for RED O (ODD) and E (EVEN) gain in the ASCI on the SBU after white level adjustment every time the machine is switched ON.	
001	RE	[0~1023/1]
002	RO	

4681	**Fact Gain Adj:G**	Factory Gain Adjustment at Factory: Green **DFU**
	When switched ON, this SP displays the setting done at the factory for GREEN and black-and-white O (ODD) and E (EVEN) gain in the ASCI on the SBU after white level adjustment every time the machine is switched ON.	
001	Color:GE	[0~1023/1]
002	Color:GO	
005	B/W:GE	
006	B/W:GO	

4682	**Fact Gain Adj:B**	Factory Gain Adjustment at Factory: Blue **DFU**
	When switched ON, this SP displays the setting done at the factory for BLUE O (ODD) and E (EVEN) gain in the ASCI on the SBU after white level adjustment every time the machine is switched ON.	
001	BE	[0~1023/1]
002	BO	

4690	**White Lvl Peak:R**	White Level Peak: Red Scan Data **DFU**
	When switched ON, these SP codes display E (EVEN) or O (ODD) for the white level peak RED data after white level detection (AGC) after the machine is switched ON.	
001	RE	[0~255/1]
002	RO	

Downloaded from www.Manualslib.com manuals search engine

4691	White Lvl Peak:G	White Level Peak: Green Scan Data **DFU**
	When switched ON, these SP codes display E (EVEN) or O (ODD) for the white level peak GREEN or black-and-white data after white level detection (AGC) after the machine is switched ON.	
001	Color:GE	[0~255/1]
002	Color:GO	
005	B/W:GE	
006	B/W:GO	

4692	White Lvl Peak:B	White Level Peak: Blue Scan Data **DFU**
	When switched ON, these SP codes display E (EVEN) or O (ODD) for the white level peak BLUE data after white level detection (AGC) after the machine is switched ON.	
001	BE	[0~255/1]
002	BO	

4693	Black Lvl Scan:R	Black Level Scan Value: Red **DFU**
	When switched ON, these SP codes display E (EVEN) or O (ODD) for the black level check done in the SBU for RED after the machine is switched ON.	
001	REE	[0~255/1]
002	ROE	
003	REO	
004	ROO	

4694	Black Lvl Scan:G	Black Level Scan Value: Green **DFU**
	When switched ON, these SP codes display E (EVEN) or O (ODD) for the black level check done in the SBU for GREEN after the machine is switched ON.	
001	Color:GEE	[0~255/1]
002	Color:GOE	
003	Color:GEO	
004	Color:GOO	
005	B/W:GEE	
006	B/W:GOE	
007	B/W:GEO	
008	B/W:GOO	

4695	Black Lvl Scan:B	Black Level Scan Value: Blue **DFU**
	When switched ON, these SP codes display E (EVEN) or O (ODD) for the black level check done in the SBU for BLUE after the machine is switched ON.	
001	BEE	[0~255/1]
002	BOE	
003	BEO	
004	BOO	

Downloaded from www.Manualslib.com manuals search engine

4800	DF Density Adj	ADF Density Adjustment
	This SP adjusts the white shading parameter for scanning an image with the ADF. Adjusts the density level if the ID of outputs from the DF and Platen mode are different.	
001	:R	[1~200/1]
002	:G	[1~200/1]
003	:B	[1~200/1]

4902	Disp ACC Data	Display ACC Data	
	This SP outputs the final data read at the end of ACC execution. A zero is returned if there was an error reading the data.		
001	R_DATA1	Photo C Patch Level 1 (8-bit)	[0~255/1]
002	G_DATA1	Photo M Patch Level 1 (8-bit)	
003	B_DATA1	Photo Y Patch Level 1 (8-bit)	
004	R_DATA2	Photo C Patch Level 17 (8-bit)	
005	G_DATA2	Photo M Patch Level 17 (8-bit)	
006	B_DATA2	Photo Y Patch Level 17 (8-bit)	

4904	Test Scan IPU	Test Scanner IPU Board
	This SP tests the components of the BICU: • Test 1 performs write and read tests the CPU by conducting a compare check that reads and writes to each register of the ASIC. • Test 2 performs a check of the image paths and connections and displays the location of a defect of an error is detected.	
001	Test 1	[0~65535/1]
002	Test 2	

4905	Select Dithering	Select Dithering Type
	This SP changes the threshold parameters of error diffusion. [0~255/1]	

4907	SBU Pattern	Set SBU Test Pattern
	This SP selects the pattern generated by the SBU.	
001	Test Pattern	[0~4/1]
002	Select Fixed Patt	[0~0x3FF/**0x3FF**]

4918	Man Gamma Adj	Manual Printer Gamma Adjustment:
	Adjusts the offset data of the printer gamma for black, cyan, magenta, and yellow in Photo mode. For more, see the last section of Section "3.19.6 PRINTER GAMMA CORRECTION".	

4929	Man Scan Gamma Adj	Manual Scan Gamma Adjustment
	Adjusts the offset data of the printer gamma for black, cyan, magenta, and yellow in manual scanning mode.	

Downloaded from www.Manualslib.com manuals search engine

4932	MainScan Dot Adj	Main Scan Dot Position Adjustment
	Corrects the left or right side alignment of the red or blue filter on the CCD.	
001	R:Left	[0~9/1]
002	R:Right	
003	B:Left	
004	B:Right	

4954	Read/Restore Std	Chart Standard: Read/Restore
	Use this SP to calibrate the scanner gamma on each machine connected with the Copy Connector (B328).	
001	Read New Chart	Reads the "Connection Kit Color Test Chart (VSST9501)" to calibrate the scanner gamma curve for two machines connected with the Copy Connector (B328). Do this SP with the test chart on each connected machine.
002	Recall Prev Chart	Restores the scanner gamma to the previous value (not the factory setting).
004	Set Std Chart	**DFU**

4991	Image Path SW	Image Path Switch
	Use this SP to use the 10-key pad to enter the number to determine the image path.	
001	IPU	[0~14/1]
	0	DFID input RGB images (upper 8 bits)
	1	Synchronous RGB images in DFID
	2	Data with shading correction on
	3	Data with shading correction OFF
	4	Data before black offset correction
	5	Data after black offset correction
	6	Shading data
	7	Test pattern data (grayscale)
	8	RGB image after line interval correction
	9	RGB image after dot correction and pre-gamma
	10	RGB image after vertiial line correction
	11	RGB image after scanner gamma correction
	12	RTB image after filtering with MTF
	13	RTB image after ADS
	14	RGB image after color processing

4992	ProCon γ Unit	Select Process Control Unit
	This SP selects either the printer or IPU to reflect process control gamma. Note: This machine is fixed at 0 (Printer) and the setting cannot be changed. [0~2/1]	

Downloaded from www.Manualslib.com manuals search engine

Group 5000

5024	**mm/inch Display Selection**
	Selects the unit of measurement. After selection, turn the main power switch off and on. [0~1/1] 0: mm 1: inch

5045	**Accounting Counter**	Counter Method
	Selects the counting method. **Note**: You can change the setting only one time. [0 to 1/ 1] 0: Development counter. Shows the total counts for color (Y,M,C) and black (K). 1: Paper counter. Shows the total page counts for: Color Total, Black Total, Color Copies, Black Copies, Color Prints, Black Prints.	

5047	**Reverse Paper Display**
	Determines whether the tray loaded with paper printed on one side is displayed. [0~1/1] 0: Not displayed 1: Displayed

5051	**Toner Refill Detection Display Japan Only**

5112	**Non-Std. Paper Sel.**
	Determines whether a non-standard paper size can be input for the universal cassette trays (Tray 2, Tray 3) [0~1/1] 0: No 1: Yes. If “1” is selected, the customer will be able to input a non-standard paper size using the UP mode.

Downloaded from www.Manualslib.com manuals search engine

5113	Optional Counter Type (Not Used)
001	Default Optional Counter Type
	Selects the type of counter: 0: None 1: Key card (RK3, 4) **Japan only** 2: Key card down 3: Pre-paid card 4: Coin Lock 5: MF key card 11: Exp Key Card (Add) 12: Exp Key Card (Deduct)
002	External Optional Counter Type
	Enables the SDK application. This lets you select a number for the external device for user access control. **Note**: "SDK" refers to software on an SD card. [0~3/1] 0: None 1: Expansion Device 1 2: Expansion Device 2 3: Expansion Device 3

5118	Disable Copying
	Temporarily denies access to the machine. **Japan Only** [0~1/1] 0: Release for normal operation 1: Prohibit access to machine

5120	Mode Clear Opt. Counter Removal
	Do not change. **Japan Only** [0~2/1] 0: Yes. Normal reset 1: Standby. Resets before job start/after completion 2: No. Normally no reset

5121	Counter Up Timing
	Determines whether the optional key counter counts up at paper feed-in or at paper exit. **Japan Only** [0~1/1] 0: Feed count 1: No feed count

5126	F Org Size	Set F Original Size Selection
	Sets the original size that the machine detects for F sizes. [0~2/1] 0: 8½ x 13 1: 8¼ x 13 2: 8 x 13	

Downloaded from www.Manualslib.com manuals search engine

5127	APS Mode
	This SP can be used to switch APS (Auto Paper Select) off when a coin lock or pre-paid key card device is connected to the machine. [0~1/1] 0: On 1: Off

5128	Code Mode With Key/Card Option	Japan Only

5131	Set Paper Size	Set Paper Size Handling
	Selects the paper size type (for originals and copy paper). (Only needs to be adjusted if the optional printer controller is installed) [0~2/1] 0: JP (Japan) 1: NA (North America) 2: EU (Europe) After changing the value, turn the main power switch off and on.	

5150	Bypass Length Setting
	Sets up the bypass tray for long paper. [0~1/1] 0: Off 1: On. Sets the tray for feeding paper up to 600 mm long. *With this SP selected on, paper jams are not detected in the paper path.*

5154	Exit Tray Set
001	Limitless
	Allows 'limitless' paper output. [0~1/1] 0: Off 1: On. Once the initial paper exit is full, another will be selected automatically. Switch this SP on only in the job queuing mode, i.e. when printing jobs in the order of selection with the print priority function. Print priority is set in the User Tools mode (System Settings> General Features> Print Priority> Job Order.)
002	Override
	Allows overriding of the setting for SP5154-001. [0~1/1] 0: Off 1: On This SP can be set only when on is selected for SP5154-001. Changing this setting has no effect on the machine when SP5154-001 is off.

Downloaded from www.Manualslib.com manuals search engine

5162	App. Switch Method
	Controls if the application screen is changed with a hardware switch or a software switch. [0~1/1] 0: Soft Key Set 1: Hard Key Set

5169	CE Login
	If you will change the printer bit switches, you must 'log in' to service mode with this SP before you go into the printer SP mode. [0~1/1] 0: Off. Printer bit switches cannot be adjusted. 1: On. Printer bit switches can be adjusted.

5212	Page Numbering	
003	Duplex Printout Left/Right Position	Horizontally positions the page numbers printed on both sides during duplexing. [–10~+10/1 mm] 0 is center, minus is left, + is right.
004	Duplex Printout High/Low Position	Vertically positions the page numbers printed on both sides during duplexing. [–10~+10/1 mm] 0 is center, minus is down, + is up.

5302	Set Time DFU
	Sets the time clock for the local time. This setting is done at the factory before delivery. The setting is GMT expressed in minutes. [–1440~1440/1 min.] JA: +540 (Tokyo) NA: -300 (NY) EU: +6- (Paris) CH: +480 (Peking) TW: +480 (Taipei) AS: +480 (Hong Kong)

Downloaded from www.Manualslib.com manuals search engine

5307	Summer Time	
	Lets you set the machine to adjust its date and time automatically with the change to Daylight Savings time in the spring and back to normal time in the fall. This SP lets you set these items: - Day and time to go forward automatically in April. - Day and time to go back automatically in October. - Set the length of time to go forward and back automatically. The settings for 002 and 003 are done with 8-digit numbers:	
	Digits	**Meaning**
	1st, 2nd	Month. 4: April, 10: October (for months 1 to 9, the first digit of 0 cannot be input, so the eight-digit setting for 002 or 003 becomes a seven-digit setting)
	3rd	Day of the week. 0: Sunday, 1: Monday
	4th	The number of the week for the day selected at the 3rd digit. If "0" is selected for "Sunday", for example, and the selected Sunday is the start of the 2nd week, then input a "2" for this digit.
	5th, 6th	The time when the change occurs (24-hour as hex code). Example: 00:00 (Midnight) = 00, 01:00 (1 a.m.) = 01, and so on.
	7th	The number of hours to change the time. 1 hour: 1
	8th	If the time change is not a whole number (1.5 hours for example), digit 8 should be 3 (30 minutes).
001	Setting	Enables/disables the settings for 002 and 003. [0~1/1] 0: Disable 1: Enable
002	Rule Set (Start)	The start of summer time.
003	Rule Set (End)	The end of summer time.

5401	Access Control	
	This SP stores the settings that limit uses access to SDK application data.	
200	SDK1 Unique ID	This data can be converted from SAS (VAS) when installed or uninstalled.
201	SDK1 Recognition	
210	SDK2 Unique ID	
211	SDK2 Recognition	
220	SDK3 Unique ID	
221	SDK3 Recognition	

5404	User Code Count Clear		
	001	User Code Counter Clear	Clears all user code counters. Press [#] to execute.

Downloaded from www.Manualslib.com manuals search engine

5501	**PM Alarm**
	Sets the count level for the PM alarm. [0~9999/1] 0: Alarm disabled The PM alarm goes off when the print count reaches this value multiplied by 1,000.

5504	**Jam Alarm**	**Japan Only**
5505	**Error Alarm**	
5507	**Supply Alarm**	

5508	**CC Call Japan Only**	
001	Jam Remains	Enables/disables initiating a call. [0~1/1] 0: Disable 1: Enable
002	Continuous Jams	
003	Continuous Door Open	
004	Low Call Mode	Enables/disables the new call specifications designed to reduce the number of calls. [0~1/1] 0: Normal mode 1: Reduced mode
011	Jam Detection: Time Length	Sets the length of time to determine the length of an unattended paper jam. [03~30/1] This setting is enabled only when SP5508-004 is enabled (set to 1).
012	Jam Detection Continuous Count	Sets the number of continuous paper jams required to initiate a call. [02~10/1] This setting is enabled only when SP5508-004 is enabled (set to 1).
013	Door Open: Time Length	Sets the length of time the remains opens to determine when to initiate a call. [03~30/1] This setting is enabled only when SP5508-004 is enabled (set to 1).
021	Jam Operation: Time Length	Determines what happens when a paper jam is left unattended. [0~1/1] 0: Automatic Call 1: Audible Warning at Machine
022	Jam Operation: Continuous Count	Determines what happens when continuous paper jams occur. [0~1/1] 0: Automatic Call 1: Audible Warning at Machine

Downloaded from www.Manualslib.com manuals search engine

023	Door Operation: Time Length	Determines what happens when the front door remains open. [0~1/1] 0: Automatic Call 1: Audible Warning at Machine

5513	**Parts Alarm Level Count Japan Only**		
	001	Normal	Sets the parts replacement alarm counter to sound for the number of copies. [1~999/1 K]
	002	DF	Sets the parts replacement alarm counter to sound for the number of scanned originals. [1~999/1 K]

5514	**Parts Alarm Level Japan Only**
001	Normal
002	DF

5610	**ACC Factory Setting**	**DFU**
004	Recall	
005	Overwrite	
005	Previoius Setting	

5611	**2-Col Tnr Ratio**	Adjust Toner Ratio Between 2 Colors **DFU**
	Adjusts the toner ratio between color pairs: Black, Cyan, Magenta, Green, and Yellow.	
001	B-C	
002	B-M	
003	G-C	
004	G-Y	
005	R-M	
006	R-Y	

Downloaded from www.Manualslib.com manuals search engine

5801	**Memory Clear**	Memory Clear
	Resets NVRAM data to the default settings. Before executing this SP, print an SMC Report.	
001	All Clear	Initializes items 2 ~ 15 below.
002	Engine Clear	Initializes all registration settings for the engine and copy process settings.
003	SCS	Initializes default system settings, SCS (System Control Service) settings, operation display coordinates, and ROM update information.
004	IMH Memory Clear	Initializes the image file system. (IMH: Image Memory Handler)
005	MCS	Initializes the automatic delete time setting for stored documents. (MCS: Memory Control Service)
006	Copier application	Initializes all copier application settings.
007	Fax application	**Not used.**
008	Printer application	Initializes the printer defaults, programs registered, the printer SP bit switches, and the printer CSS counter. **(Not used)**
009	Scanner application	Initializes the defaults for the scanner and all the scanner SP modes.
010	Web Service/ Network application	Deletes the Netfile (NFA) management files and thumbnails, and initializes the Job login ID. Netfiles: Jobs to be printed from the document server using a PC and the DeskTopBinder software
011	NCS	Initializes the system defaults and interface settings (IP addresses also), the SmartNetMonitor for Admin settings, WebStatusMonitor settings, and the TELNET settings. (NCS: Network Control Service)
014	Clear DCS Setting	Initializes the DCS (Delivery Control Service) settings.
015	Clear UCS Setting	Initializes the UCS (User Information Control Service) settings.
016	MIRS Setting	Initializes the MIRS (Machine Information Report Service) settings.
017	CCS	Initializes the CCS (Certification and Charge-control Service) settings.

5802	**Engine Free Run**	Copier Engine Free Run
	Makes a base engine free run [0~1/1] 0: Disable: Release free run mode 1: Enable: Enable free run mode Return this setting to off (0) after testing is completed.	

Downloaded from www.Manualslib.com manuals search engine

5803	**Input Chk**	Input Check (Mainframe) (☛5.6.1)

5804	**Output Chk**	Output Check (☛5.6.2)

5810	**Cancel Fusing SC**	Cancel Fusing SC Code
	When the machine issues one of the "Level A" SC codes shown below, this indicates a serious problem in the fusing unit. The machine is disabled and the operator cannot reset the SC. The machine requires servicing immediately. Use this SP code to release the machine for servicing. • SC542 – SC545 Heating roller thermistor 1 • SC547 – Zero Cross • SC548 – SC550 Heating roller thermistor 2 • SC551 – Pressure roller thermistor • SC553 – SC555 Pressure roller thermistor • SC662 – SC565 Hot roller thermistor	

5811	**Machine No. Setting**	Displays the machine serial number.

5812	**Service Tel. No. Setting**	
001	Service	Inputs the telephone number of the CE (displayed when a service call condition occurs.)
002	Facsimile	Use this to input the fax number of the CE printed on the Counter Report (UP mode). **Not Used**
003	Supply	Displayed on the initial SP screen.
004	Operation	Allows the service center contact telephone number to be displayed on the initial screen.

Downloaded from www.Manualslib.com manuals search engine

5816	Remote Service (Not Used)	
001	I/F Setting	Turns the remote diagnostics off and on. [0~2/1] 0: Remote diagnostics off. 1: Serial (CSS or NRS) remote diagnostics on. 2: Network remote diagnostics.
002	CE Call	Lets the service engineer start or end the remote machine check with CSS or NRS; to do this, press the center report key.
003	Function Flag	Enables and disables remote diagnosis over the NRS network. [0~1/1] 0: Disables remote diagnosis over the network. 1: Enables remote diagnosis over the network.
006	Device Information Call Display	Controls if the item for initial setting of the screen for the NRS device-information notification-call is shown. [0~1/1] 0: Enabled. Item initial setting not shown. 1: Disable. Item for initial setting shown.
007	SSL Disable	Controls if RCG (Remote Communication Gate) confirmation is done by SSL during an RCG send for the NRS over a network interface. [0~1/1] 0: Yes. SSL not used. 1: No. SSL used.
008	RCG Connect Timeout	Sets the length of time (seconds) for the time-out when the RCG (Remote Communication Gate) connects during a call via the NRS network. [1~90/1 sec.]
009	RCG Write to Timeout	Sets the length of time (seconds) for the time-out when sent data is written to the RCG during a call over the NRS network. [0~100/1 sec.]
010	RCG Read Timeout	Sets the length of time (seconds) for the timeout when sent data is written from the RCG during a call over the NRS network. [0~100/1 sec.]
011	Port 80 Enable	Controls if permission is given to get access to the SOAP method over Port 80 on the NRS network. [0~1/1] 0: No. Access denied 1: Yes. Access granted.

Downloaded from www.Manualslib.com manuals search engine

5821	Remote Service Address (Japan Only)	
001	CSS PI Device Code	Sets the PI device code. After you change this setting, you must turn the machine off and on.
002	RCG IP Address	Sets the IP address of the RCG (Remote Communication Gate) destination for call processing at the remote service center. [00000000h~FFFFFFFFh/1]

5824	NVRAM Data Upload
	Uploads the NVRAM data to an SD card (B6455010). Press Execute. **Note**: When uploading in this SP mode data, the front door must be open.

5825	NVRAM Data Download
	Downloads data from an SD card to the NVRAM in the machine. After downloading is completed, remove the card and turn the machine power off and on.

5828	Network Setting				
050	1284 Compatibility (Centro)	Enables and disables bi-directional communication on the parallel connection between the machine and a computer. [0~1/1] 0:Off 1: On			
052	ECP (Centro)	Disables and enables the ECP feature (1284 Mode) for data transfer. [0~1/1] 0: Disabled 1: Enabled			
065	Job Spool Setting	Switches job spooling spooling on and off. **0**: No spooling 1: Spooling enabled			
066	Job Spool Clear	This SP determines whether the job interrupted at power off is resumed at the next power on. This SP operates only when SP5828 065 is set to 1. **1**: Resumes printing spooled jog. 0: Clears spooled job.			
069	Job Spool Protocol	This SP detemines whether job spooling is enabled or dispabled for each protocol. This is a 8-bit setting.			
		0	LPR	4	BMLinks (**Japan Only**)
		1	FTP (Not Used)	5	DIPRINT
		2	IPP	6	Reserved (Not Used)
		3	SMB	7	Reserved (Not Used)
077	IPv4 DNS Server 2	Sets the IPv4 address for a DNS server. This address can be used among devices that have IPv4 devices (Ethernet, IPv4 Over 1394, IEEE 802.11b, etc.)			
078	IPv4 DNS Server 3				
079	Domain Name (Ethernet)				
084	Setting List Print	Prints a list of the NCS parameter settings.			

Downloaded from www.Manualslib.com manuals search engine

090	TELNET Operation Settings	Disables or enables Telnet operation. If this SP is disabled, the Telnet port is closed. [0~1/1] 0: Disable 1: Enable
091	Web Operation	Disables or enables the Web operation. [0~1/1] 0: Disable 1: Enable
096	Rendezvous Operation	This SP disables/enables Rendezvous operation. This is a set of protocols that allows a device on an IP network to automatically recognize and connect with other devices (such as a printer) on a network. Once a new device is connected to the network, it can be used immediately by every computer on the network. No special setup procedures or configuration settings are required **1**: Enable 0: Disable

5832	**HDD Formatting**
	Enter the SP number for the partition to initialize, then press #. When the execution ends, cycle the machine off and on.
001	HDD Formatting (All)
002	HDD Formatting (IMH)
003	HDD Formatting (Thumbnail)
004	HDD Formatting (Job Log)
005	HDD Formatting (Printer Fonts)
006	HDD Formatting (User Info.)
007	Mail RX Data
008	Mail TX Log
009	HDD Formatting (Log)
010	HDD Formatting Log
011	HDD Formatting (DiskTopBinder)

5833	**e-Cabinet Enable**
	Enables the e-Cabinet function. Then, the user names in the cabinet are enabled for use with the POP server. [0~1/1] 0: Disabled 1: Enabled

Downloaded from www.Manualslib.com manuals search engine

5836	Capture	
001	Capture Function (0:Off 1:On)	
	With this function disabled, the settings related to the capture feature cannot be initialized, displayed, or selected. [0~1/1] 0: Disable 1: Enable	
002	Panel Setting	
	Determines whether each capture related setting can be selected or updated from the initial system screen. [0~1/1] 0: Disable 1: Enable The setting for SP5836-001 has priority.	
003	Print Backup Function (0:Off 1:On)	
	Turns the print backup feature on and off. Default: **0** (Off) When this feature is on, the print backup features are shown in the initial system settings. *Enabled only when optional File Format Converter (MLB:Media Link Board) is installed.* [0~1/1] 0: Disable 1: Enable	
071	Reduction for Copy Color	[0~3/1] 0:1 1:1/2 2:1/3 3:1/4 **DFU**
072	Reduction for Copy B&W Text	[0~6/1] 0:1 1:1/2 2:1/3 3:1/4 6:2/3
073	Reduction for Copy B&W Other	[0~6/1] 0:1 1:1/2 2:1/3 3:1/4 6:2/3
074	Reduction for Printer Color	[0~3/1] 0:1 1:1/2 2:1/3 3:1/4 **DFU**
075	Reduction for Printer B&W	[0~6/1] 0 1 1:1/2 2:1/3 3:1/4 6:2/3
076	Reduction for Printer B&W HQ	[1~5/1] 1:1/2 3:1/4 4:1/6 5:1/8
077	Reduction for Printer Col 1200 dpi	[1~5/1] 1:1/2 3:1/4 4:1/6 5:1/8
078	Reduction for Printer B&W 1200 dpi	[1~5/1] 1:1/2 3:1/4 4:1/6 5:1/8
081	Format for Copy Color	[0~3/1] 0: JFIF/JPEG, 1: TIFF/MMR, 2: TIFF/MH, 3: TIFF/MR **DFU**
082	Format for Copy B&W Text	[0~3/1] 0: JFIF/JPEG, 1: TIFF/MMR, 2: TIFF/MH, 3: TIFF/MR
083	Format Copy B&W Other	[0~3/1] 0: JFIF/JPEG, 1: TIFF/MMR, 2: TIFF/MH, 3: TIFF/MR

Downloaded from www.Manualslib.com manuals search engine

084	Format for Printer Color	[0~3/1] 0: JFIF/JPEG, 1: TIFF/MMR, 2: TIFF/MH, 3: TIFF/MR **DFU**
085	Format for Printer B&W	[0~3/1] 0: JFIF/JPEG, 1: TIFF/MMR, 2: TIFF/MH, 3: TIFF/MR
086	Format for Printer B&W HQ	[0~3/1] 0: JFIF/JPEG, 1: TIFF/MMR, 2: TIFF/MH, 3: TIFF/MR
091	Default for JPEG	[5~95/1]
	Sets the JPEG format default for documents sent to the document management server with the MLB, with JPEG selected as the format. *Enabled only when optional File Format Converter (MLB: Media Link Board) is installed.*	
092	High Quality for JPEG	Sets the quality level of JPEG images for high quality sent to the Document Server with the MLB (Media Link Board). [5~95/1]
093	Low Quality for JPEG	Sets the quality level of JPEG images for low quality sent to the Document Server with the MLB (Media Link Board). [5~95/1]
094	Default Format for Backup Files	Sets the format of the backup files. [0~2/1] 0: TIFF 1: JPEG 2: For printing This feature can be selected only if SP5836-3 is set to "1".
095	Default Resolution for Backup Files	Sets the resolution conversion ratio for the backup files. [0~3/1] 0: 1x 1: 1/2x 2: 1/3 x 3: 1/4x
097	Default Compression for Backup Files	Sets the rate of compression for the backup files. [0~2/1] 0: Standard 1: Low 2: High
098	Back Projection Removal	Removes the ghost images that are copied from the back sides of two-sided originals. [0~1/1] 0: Disable 1: Enable

Downloaded from www.Manualslib.com manuals search engine

5839	**IEEE 1394 (Not Used)**
	This SP is displayed only when an IEEE 1394 (firewire) card is installed.
004	Host Name
	Enter the name of the device used on the network. Example: RNP0000000000
007	Cycle Master
	Enables or disables the cycle master function for the 1394 bus standard. [0~1/1] 0: Disable (Off) 1: Enable (On)
008	BCR Mode
	Determines how BCR (Broadcast Channel Register) operates on the 1394 standard bus when the independent node is in any mode other than IRM. (NVRAM: 2-bits) [Always Effective]
009	IRM 1394a Check
	Conducts a 1394a check of IRM when the independent node is in any mode other than IRM. [0~1/1] 0: Checks whether IRM conforms to 1394a 1: After IRM is checked, if IRM does not conform then independent node switches to IRM.
010	Unique ID
	Lists the ID (Node_Unique_ID) assigned to the device by the system administrator. Bit0: Off Bit1: On OFF: Does not list the Node_Unique_ID assigned by the system administrator. Instead, the Source_ID of the GASP header in the ARP is used. ON: The Node_Unique_ID assigned by the system administrator is used, and the Source_ID of the GASP header in the ARP is ignored. Also, when the serial bus is reset, extra bus transactions are opened for the enumeration.
011	Logout
	Handles the login request of the login initiator for SBP-2. (1-bit) Bit0: Off Bit1: On OFF: Disable (refuse login). Initiator retry during login. Login refusal on arrival of login request (standard operation) ON: Enable (force logout). Initiator retry during login. Login refusal on arrival of login request, and the initiator forces the login.
012	Login
	Enables or disables the exclusive login feature (SBP-2 related). Bit0: Off Bit1: On OFF: Disables. The exclusive login (LOGIN ORB exclusive it) is ignored. ON: Enables. Exclusive login is in effect.

Downloaded from www.Manualslib.com manuals search engine

013	Login MAX
	Sets the maximum number of logins from the initiator (6-bits) [0~63/1] 0: Reserved 63: Reserved

5840	**IEEE 802.11b (Not Used)**
006	Channel MAX
	Sets the maximum range of the bandwidth for the wireless LAN. This bandwidth setting varies for different countries. [1~14/1]
007	Channel MIN
	Sets the minimum range of the bandwidth for operation of the wireless LAN. This bandwidth setting varies for different countries. [1~14/1]
011	WEP Key Select
	Determines how the initiator (SBP-2) handles subsequent login requests. [0~1/1] 0: If the initiator receives another login request while logging in, the request is refused. 1: If the initiator receives another login request while logging in, the request is refused and the initiator logs out. **Note**: Displayed only when the wireless LAN card is installed.

5841	**Supply Name Setting**	
	Press the User Tools key. These names appear when the user presses the Inquiry button on the User Tools screen.	
001	Toner Name Setting: Black	
002	Toner Name Setting: Cyan	
002	Toner Name Setting: Yellow	
004	Toner Name Setting: Magenta	
011	StapleStd1	
012	StapleStd2	Standard Staples for B706
013	StapleStd3	Standard Staples for B700/B701
021	StapleBind1	
022	StapleBind2	Booklet Staples for B700
023	StapleBind3	

5842	**Net File Analysis Mode Setting**	**DFU**	
	This is a debugging tool. It sets the debugging output mode of each Net File process. Bit SW 0011 1111	**Bit**	**Groups**
		0	System & other groups (LSB)
		1	Capture related
		2	Authentication related
		3	Address book related
		4	Machine management related
		5	Output related (printing, delivery)
		6	Repository related

Downloaded from www.Manualslib.com manuals search engine

5844	USB
001	Transfer Rate
	Sets the speed for USB data transmission. [Full Speed] [Auto Change]
002	Vendor ID
	Sets the vendor ID: Initial Setting: 0x05A Ricoh Company [0x0000~0xFFFF/1] **DFU**
003	Product ID
	Sets the product ID. [0x0000~0xFFFF/1] **DFU**
004	Device Release No.
	Sets the device release number of the BCD (binary coded decimal) display. [0000~9999/1] **DFU** Enter as a decimal number. NCS converts the number to hexadecimal number recognized as the BCD.

5845	Delivery Server
These are delivery server settings.	
001	FTP Port No.
	[0~65535/1]
002	IP Address
	Use this SP to set the Scan Router Server address. The IP address under the transfer tab can be used with the initial system setting. [0~FFFFFFFF/1]
006	Delivery Error Display Time
	Use this setting to set the length of time that the message is shown when a test error occurs during document transfer with the NetFile application and an external device. [0~999/1]
008	IP Address (Secondary)
	Sets the IP address that is given to the computer that is the secondary delivery server for Scan Router. This SP lets you set only the IP address, and does not refer to the DNS setting.
009	Delivery Server Model
	Lets you change the model of the delivery server that is registered by the I/O device. [0~4/1] 0: Unknown 1: SG1 Provided 2: SG1 Package 3: SG2 Provided 4: SG2 Package

Downloaded from www.Manualslib.com manuals search engine

010	Delivery Svr. Capability
	Changes the functions that the registered I/O device can do. [0~255/1] Bit7 = 1 Comment information exits Bit6 = 1 Direct specification of mail address possible Bit5 = 1 Mail RX confirmation setting possible Bit4 = 1 Address book automatic update function exists Bit3 = 1 Fax RX delivery function exists Bit2 = 1 Sender password function exists Bit1 = 1 Function to link MK-1 user and Sender exists Bit0 = 1 Sender specification required (if set to 1, Bit6 is set to “0”)
011	Delivery Svr.Capability (Ext)
	These settings are for future use. They will let you increase the number of registered devices (in addition to those registered for SP5845 010). There are eight bits (Bit 0 to Bit 7). All are unused at this time.

5846	**UCS Setting**
001	Machine ID (Delivery Server)
	Displays the unique device ID in use by the delivery server directory. The value is only displayed and cannot be changed. This ID is created from the NIC MAC or IEEE 1394 EUI. The ID is displayed as either 6-byle or 8-byte binary. 6-byte %02X.%02X.%02X.%02X.%02X.%02X 8-byte %02X.%02X.%02X.%02X.%02X.%02X.%02X.%02X
002	Machine ID Clear (Delivery Server)
	Clears the unique ID of the device used as the name in the file transfer directory. Execute this SP if the connection of the device to the delivery server is unstable. After clearing the ID, the ID will be established again automatically by cycling the machine off and on.
003	Maximum Entries
	Changes the maximum number of entries that UCS can handle. [2000~50000/1] If a value smaller than the present value is set, the UCS managed data is cleared, and the data (excluding user code information) is displayed.
006	Delivery Server Retry Timer
	Sets the interval for retry attempts when the delivery server fails to acquire the delivery server address book. [0~255/1 s] 0: No retries
007	Delivery Server Retry Times
	Sets the number of retry attempts when the delivery server fails to acquire the delivery server address book. [0~255/1]
008	Delivery Server Maximum Entries
	Lets you set the maximum number of account entries and information about the users of the delivery server controlled by UCS. [20000~50000/1]

Downloaded from www.Manualslib.com manuals search engine

010	LDAP Search Timeout
	Sets the length of the time-out for the search of the LDAP server. [1~255/1]
047	Initialize Local Address Book
	Clears all of the address information from the local address book of a machine managed with UCS.
048	Initialize Delivery Info.
	Press [Execute] to delete all items (this does not include user codes) in the delivery address book that is controlled by UCS.
049	Initialize LDAP Info.
	Press [Execute] to delete all items (this does not include user codes) in the LDAP address book that is controlled by UCS.
050	Initialize Local Info.
	Clears everything (including users codes) in the directory information managed by UCS. However, the accounts and passwords of the system administrators are not deleted.
051	Upload All Directory Info.
	Uploads all directory information to the IC card.
052	Download All Directory Info.
	Downloads all directory information from the IC card.
053	Update Info Clear
	Deletes the address book uploaded from the SD card in the slot. Deletes only the files uploaded for that machine. This feature does not work if the card is write-protected. **Note**: After you do this SP, go out of the SP mode, turn the power off. Do not remove the SD card until the Power LED stops flashing.
090	Plain Data Forbidden
	Lets you to prevent the address from transmission as plain data. This is a security function that prevents unauthorized access to address book data. [0~1/1] 0: No check. Address book data not protected. 1: Check. Enables operation of UCS without data from HDD or SC card and without creating address book information with plain data.
091	FTP Auth. Port Settings
	Sets the FTP port to get the delivery server address book that is used in the individual authorization mode. [0~65535/1]
094	Encryption Status
	Shows the status of the encryption function of the address book on the LDAP server. [0~255/1] No default

Downloaded from www.Manualslib.com manuals search engine

5847	Net File Resolution Reduction		
	5847 1 through 5847 6 changes the default settings of image data sent externally by the Net File page reference function. [0~2/1] 5847 21 sets the default for JPEG image quality of image files controlled by NetFile. "NetFile" refers to jobs to be printed from the document server with a PC and the DeskTopBinder software.		
001	Rate After Copy Col	[0~5/1]	0: 1x 1: 1/2x 2: 1/3x 3: 1/4x 4: 1/6x 5: 1/8x 6: 2/3x[1] [1]: "6: 2/3x" applies to 003, 005, 006 only.
002	Rate for Copy B&W Text	[0~6/1]	
003	Rate for Copy B&W Other	[0~6/1]	
004	Rate for Printer Color	[0~5/1]	
005	Rate for Printer B&W	[0~6/1]	
006	Rate for Printer B&W HQ	[0~6/1]	
021	Network Quality Default for JPEG		
	Sets the default value for the quality of JPEG images sent as NetFile pages. This function is available only with the MLB (Media Link Board) option installed. [5~95/1]		

5848	Web Service	
	5847 2 sets the 4-bit switch assignment for the access control setting. Setting of 0001 has no effect on access and delivery from Scan Router. 5847 100 sets the maximum size of images that can be downloaded. The default is equal to 1 gigabyte.	
001	Access Control. : NetFile (Lower 4 Bits Only)	
	Bit switch settings. 0000: No access control 0001: Denies access to DeskTop Binder. Access and deliveries from Scan Router have no effect on capture.	
002	Access Control. : Repository (Lower 4 Bits)	0000: No access control 0001: Denies access to DeskTop Binder.
003	Access Control. : Doc. Svr. Print (Lower 4 Bits)	Switches access control on and off. 0000: OFF
004	Access Control. : User Directory (Lower 4 Bits)	
005	Access Control. : Delivery Input (Lower 4 Bits)	
009	Access Control. : Job Control (Lower 4 Bits)	
011	Access Control: Device Management (Lower 4 Bits)	
021	Access Control: Delivery (Lower 4 Bits)	
022	Access Control: User Administration (Lower 4 Bits)	
041	Access Control: Security Setting (Lower 4 Bits)	
100	Repository: Download Image Max. Size	[1~1024/1 K]

Downloaded from www.Manualslib.com manuals search engine

5849	Installation Date	
	Displays or prints the installation date of the machine.	
001	Display	The “Counter Clear Day” has been changed to “Installation Date” or “Inst. Date”.
002	Switch to Print	Determines whether the installation date is printed on the printout for the total counter. [0~1/1] 0: No Print 1: Print

5853	Stamp Data Download
	Press [Execute] to download the fixed stamp data from the machine ROM onto the hard disk. Then these stamps can be used by the system. If this is not done, the user will not have access to the fixed stamps (“Confidential”, “Secret”, etc.). You must always execute this SP after replacing the HDD or after formatting the HDD. Always switch the machine off and on after executing this SP.

5856	Remote ROM Update
	When set to “1” allows reception of firmware data via the local port (IEEE 1284) during a remote ROM update. This setting is reset to zero after the machine is cycled off and on. Allows the technician to upgrade the firmware using a parallel cable [0~1/1] 0: Not allowed 1: Allowed

5857	Save Debug Log
001	On/Off (1:ON 0:OFF)
	Switches on the debug log feature. The debug log cannot be captured until this feature is switched on. [0~1/1] 0: OFF 1: ON
002	Target (2: HDD 3: SD Card)
	Selects the destination where the debugging information generated by the event selected by SP5858 will be stored if an error is generated [2~3 /1] 2: HDD 3: SD Card
005	Save to HDD
	Specifies the decimal key number of the log to be written to the hard disk.
006	Save to SD Card
	Specifies the decimal key number of the log to be written to the SD Card.
009	Copy HDD to SD Card (Latest 4 MB)
	Takes the most recent 4 MB of the log written to the hard disk and copies them to the SD Card. A unique file name is generated to avoid overwriting existing file names on the SD Card. Up to 4MB can be copied to an SD Card. 4 MB segments can be copied one by one to each SD Card.

Downloaded from www.Manualslib.com manuals search engine

010	Copy HDD to SD Card Latest 4 MB Any Key)
	Takes the log of the specified key from the log on the hard disk and copies it to the SD Card. A unique file name is generated to avoid overwriting existing file names on the SD Card. Up to 4 MB can be copied to an SD Card. 4 MB segments can be copied one by one to each SD Card. This SP does not execute if there is no log on the HDD with no key specified.
011	Erase HDD Debug Data
	Erases all debug logs on the HDD
012	Erase SD Card Debug Data
	Erases all debug logs on the SD Card. If the card contains only debugging files generated by an event specified by SP5858, the files are erased when SP5857 010 or 011 is executed. To enable this SP, the machine must be cycled off and on.
013	Free Space on SD Card
	Displays the amount of space available on the SD card.
014	Copy SD to SD (Latest 4MB)
	Copies the last 4MB of the log (written directly to the card from shared memory) onto an SD card.
015	Copy SD to SD (Latest 4MB Any Key)
	This SP copies the log on an SD card (the file that contains the information written directly from shared memory) to a log specified by key number. (☛5.10)
016	Make HDD Debug
	This SP creates a 32 MB file to store a log on the HDD.
017	Make SD Debug
	This SP creates a 4 MB file to store a log on an SD card.

5858	**Debug Save When**	
	These SPs select the content of the debugging information to be saved to the destination selected by SP5857 002. SP5858 3 stores one SC specified by number. *Refer to Section 4 for a list of SC error codes.*	
001	Engine SC Error (0:OFF 1:ON)	Stores SC codes generated by copier engine errors. [0~1/1] 0: OFF 1: ON
002	Controller SC Error (0:OFF 1:ON)	Stores SC codes generated by GW controller errors. [0~1/1] 0: OFF 1: ON
003	Any SC Error	[0~65535/1]
004	Jam (0:OFF 1:ON)	Stores jam errors. [0~1/1] 0: OFF 1: ON

Downloaded from www.Manualslib.com manuals search engine

5859	Debug Log Save Function	
001	Key 1	These SPs allow you to set up to 10 keys for log files for functions that use common memory on the controller board. (☛5.10) [-9999999~9999999/1]
002	Key 2	
003	Key 3	
004	Key 4	
005	Key 5	
006	Key 6	
007	Key 7	
008	Key 8	
009	Key 9	
010	Key 10	

5860	SMTP/POP3/IMAP4
020	Partial Mail Receive Timeout
	[1~168/1] Sets the amount of time to wait before saving a mail that breaks up during reception. The received mail is discarded if the remaining portion of the mail is not received during this prescribed time.
021	MDN Response RFC2298 Compliance
	Determines whether RFC2298 compliance is switched on for MDN reply mail. [0~1/1] 0: No 1: Yes
022	SMTP Auth. From Field Replacement
	Determines whether the FROM item of the mail header is switched to the validated account after the SMTP server is validated. [0~1/1] 0: No. “From” item not switched. 1: Yes. “From” item switched.
025	SMTP Auth Direct Sending
	No information is available at this time.

5866	E-Mail Alert	
001	Notice of E-mail	**Not used with this machine.**
005	Add Date Field	

5870	Common Key Info Writing	
	Writes to flash ROM the common proof for validating the device for NRS specifications.	
001	Writing	**Note**: These SPs are for future use and currently are not used.
003	Initialize	

Downloaded from www.Manualslib.com manuals search engine

5871	HDD Function Disable
	Disables the HDD functions by suppressing all functions that write data to the HDD. After this SP is executed, the machine must be switched off and on to enable the setting. [0~1/1] 0: OFF 1: ON **Note**: This SP is intended for use during installation of the Data Overwrite Security Unit Type C (B735). For more, see section “1. Installation”.

5873	SD Card Apli.	
	Allows you to move applications from one SD card another. For more, see "1.15.5 Mergining Applications on One SD Card".	
001	Move Exec	Executes the move from one SD card to another.
002	Undo Exec	This is an undo function. It cancels the previous execution.

5875	SC Auto Reboot
	Determines whether the machine reboots automatically when an SC error occurs. [0~1/1] 0: The machine reboots automatically when the machine issues an SC error and logs the SC error code. If the same SC occurs again, the machine does not reboot. 1: The machine does not reboot when an SC error occurs. The reboot does not occur for Type A SC codes.

5878	Option Setup	Data Overwrite Security Unit (B735) Setup
	Press [Execute] to initialize the Data Overwrite Security option for the copier. For more, see "1.15 MFP Controller Options" in Section "1. Installation".	

5880	ACS High Performance Mode
	This SP enables and disables ACS. In the ACS mode the machine raises/lowers the ITB to print color/black-and-white. If a job contains both full-color and black-and-white pages, the ITB raises for the color pages and lowers for the black-and-white pages. ACS reduces wear on the color drums but reduces printing speed slightly. **0**: ACS enabled. The ITB raises/lowers for full-color/black-and-white printing. 1: ACS disabled. The ITB remains in contact with all four drums regardless of whether the job is for full-color or black-and-white. This setting allows the machine to print faster than the ACS mode because no time is required for the raising/lowering of the ITB.

Downloaded from www.Manualslib.com manuals search engine

5907	Plug & Play Maker/Model Name
	Selects the brand name and the production name for Windows Plug & Play. This information is stored in the NVRAM. If the NVRAM is defective, these names should be registered again. After selecting, press the “Original Type” key and “#” key at the same time. When the setting is completed, the beeper sounds five times.

5913	Switchover Permission Time
002	Print Application Timer
	Sets the length of time to elapse before allowing another application to take control of the display when the application currently controlling the display is not operating because a key has not been pressed. [3~30/1 s]
102	Print Application Set No information is available at this time.
	[0~1/**1**/1]

5959	Set Size	Set Size
	Tray 1 (tandem tray) and the LCT do not have automatic paper size detection. Use these SP codes to set the paper size for Tray 1 and the optional LCT.	
001	Tray 1:Tandem	
	The following paper sizes can be set. If the A3/DLT kit is not installed, you can only use settings 0 and 1	
	0 A4	6 8.5” x 14” SEF
	1 8.5” x 11”	7 8.5” x 11” SEF
	2 A3 SEF	8 B5
	3 B4 SEF	9 B5 SEF
	4 A4 SEF	10 Custom
	5 11” x 17”	
005	LCT	
	The LCT accepts three paper sizes. Enter the correct number of the size of the paper loaded in the LCT:	
	0 A4	4 8.5” x 11” SEF
	1 8.5” x 11”	5 B4 SEF
	2 B5	6 8.5” x 14” SEF
	3 A4 SEF	7 Custom Size

Downloaded from www.Manualslib.com manuals search engine

5967	Copy Server: Set Function
	Enables and disables the document server. This is a security measure that prevents image data from being left in the temporary area of the HDD. After changing this setting, you must switch the main switch off and on to enable the new setting.[0~1/1] 0: ON 1: OFF

5974	Cherry Server
	Selects which version of the Scan Router application program, “Light” or “Full (Professional)”, is installed. [0 ~ 1 / **0** / 1 /step] 0: Light version (supplied with this machine) 1: Full version (optional)

5990	SP Print Mode	SMC Print
	In the SP mode, press Copy Window to move to the copy screen, select the paper size, then press Start. Select A4/LT (Sideways) or larger to ensure that all the information prints. Press SP Window to return to the SP mode, select the desired print, and press Execute.	
001	All (Data List)	
002	SP (Mode Data List)	
003	User Program Data	
004	Logging Data	
005	Diagnostic Report	
006	Non-Default (Prints only SPs set to values other than defaults.)	
007	NIB Summary	
008	Capture Log	
021	Copier User Program	
022	Scanner SP	
023	Scanner User Program	

Downloaded from www.Manualslib.com manuals search engine

Group 6000

6006	**ADF Reg Adj**	ADF Registration Adjustment
001	ADF Main Reg Adj	Adjusts the side-to-side registration for the front/back in ADF mode. [–3~+3/0.1 mm]
003	ADF Sub Reg Adj	Adjusts the vertical registration for the front/back in ADF mode. [–30 ~+30/0.17 mm] -30 = -5.1 mm +30 = +5.1 mm
005	ADF Buck Adj:Front	Adjusts the roller timing at the skew correction sensor/entrance roller. A higher setting causes more buckling. [–12.0~+12/0.25 mm] -12 = -3.0 mm +12 = +3.0 mm
006	ADF Buck Adj:Back	Adjusts the roller timing at the interval sensor/scanning roller. A higher setting causes more buckling. [–8.0~+8/0.25 mm] [–8.0~+8/0.25 mm] -8 = -2 mm +8 = +2 mm
007	ADF TEdge EMargin	These settings adjust the erase margin for the trailing edges for the front/back. [–20~+20/0.5 mm] -20 = -10 mm +20 = +10 mm

6007	**ADF Input Chk**	ADF Input Check
	Displays signals received from sensors and switches in the ADF. (☛5.7.1)	

6008	**ADF Output Chk**	ADF Output Check
	Turns on the ADF electrical components individually for testing. (☛5.7.2)	

6009	**ADF Free Run**	ADF Free Run
	This SP does an ADF free run in duplex original mode.	
001	Simplex	
002	Duplex	

6016	**ADF OrgSizePrior**	ADF Original Size Detection Priority
	Allows selection of alternate settings for automatic original size detection. (☛6.4.3)	

6017	**ADF Mag Adj**	ADF Magnification Adjustment
001	ADF Sub Mag Adj	This changes the magnification by adjusting the speed of scanning. [–50(–5%)~+50(+5%)/0.1%]

Downloaded from www.Manualslib.com manuals search engine

6020	**ADF Skew Adj**	ARDF Skew Adjustment at the Scanning Entrance Roller
	This SP switches on stopping the scanning entrance roller for all paper sizes. Normally, the scanning entrance roller stops briefly to correct skew of small paper sizes in the ADF paper path and for the 2nd side scanning of originals during duplexing. Setting this SP to "1" sets the ADF to stop the scanning entrance roller for all paper sizes to correct for skew a second time. [0~1/1]	

6050	**Adj Staple Pos**	Staple Position Adjustment
	Adjusts the position of the staples during corner stapling.	

6090	**LCT Output Chk**	LCT Output Check
	Performs the output check for the optional LCT.	
001	LCT Feed Motor	
002	LCT Pick-up SOL	

6101	**Adj Punch Pos 1**	Punch Position Adjustment
	Adjusts the punch hole positions in the direction of paper feed. NA: North America DOM: Japan EU: Europe SCAN: Scandinavia	
001	2-Hole:DOM	[-75~+75/0.5 mm] + Value: Shifts punch unit in the direction of feed. - Value: Shift punch unit against direction of feed. 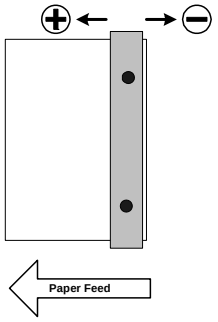 B132S921.WMF
002	3-Hole:NA	
003	4-Hole:EU	
004	4-Hole:SCAN	
005	2-Hole:NA	

Downloaded from www.Manualslib.com manuals search engine

6102	**Adj Punch Pos 2**	Punch Position Adjustment
	Adjusts the punch position perpendicular to the direction of feed. [-20~+20/0.4 mm] + Value: Shifts punch unit toward back of the finisher. - Value: Shift punch unit toward front of the finisher.	
001	2-Hole:DOM	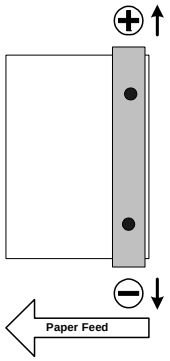 B132S922.WMF
002	3-Hole:NA	
003	4-Hole:EU	
004	4-Hole:SCAN	
005	2-Hole:NA	

6103	**Punch Hole Reg 1**	Punch Hole Registration Adjustment
	This SP corrects punch hole alignment by correcting the skew of each by adjusting the amount of time the finisher entrance roller remains off while the exit roller of the machine remains on. This buckles the leading edge of the sheet slightly against the finisher entrance roller while it remains off.	
001	A3 SEF	[-500~+500/0.3 mm] + Value:Increases time finisher entrance roller remains off. - Value: Descreases time finisher entrance roller remains off.
002	B4 SEF	
003	A4 SEF	
004	A4 LEF	
005	B5 SEF	
006	B5 LEF	
007	DLT SEF	
008	LG SEF	
009	LT SEF	
010	LT LEF	
011	12" x 18"	
012	Custom Size	

Downloaded from www.Manualslib.com manuals search engine

6104	**Punch Hole Reg 2**	Punch Hole Control
	This SP determines whether the finisher entrance roller stops to correct skew when paper enters the finisher.	
001	A3 SEF	[0~2/1] 0: No adjustment. Quickly restores the default setting of you forget what the other settings do. 0: Paper stops for skew correction 1: Paper does not stop 2: Paper stops (same as default)
002	B4 SEF	
003	A4 SEF	
004	A4 LEF	
005	B5 SEF	
006	B5 LEF	
007	DLT SEF	
008	LG SEF	
009	LT SEF	
010	LT LEF	
011	12" x 18"	
012	Custom Size	

6105	**Fine Adj Staple**	Fine Adjust Staple Jogger Fence Postion
	This SP corrects the distance between the jogger fences and the sides of the stack on the finisher stapling tray.	
001	A3 SEF	[-15~+15/0.5 mm] + Value: Increases distance between jogger fences and the sides of the stack. - Value: Decreases the distance between the jogger fences and the sides of the stack.
002	B4 SEF	
003	A4 SEF	
004	A4 LEF	
005	B5 SEF	
006	B5 LEF	
007	DLT SEF	
008	LG SEF	
009	LT SEF	
010	LT LEF	
011	12"x18"	
012	Custom Size	

6106	**Fine Adj Out Jog**	Fine Adjust Output Jogger Unit Fences
	This SP corrects the distance between the jogger fences and the sides of the stack when the output jogger unit attached to the side of the machine jogs sheets as they exit the finisher. + Value: Increases distance between jogger fences and the sides of the stack. - Value: Decreases the distance between the jogger fences and the sides of the stack.	
001	A3 SEF	[-15~+15/0.5 mm]
002	B4 SEF	
003	A4 LEF	
004	B5 LEF	
005	DLT SEF	[-15~+15/0.5 mm]
006	LT LEF	[-15~+15/0.5 mm]
007	Custom	[-15~+15/0.5 mm]

Downloaded from www.Manualslib.com manuals search engine

6107	**Interposer Size**	Paper Size Priority: Cover Interposer
	Controls the paper size for the cover interposer tray. Select a paper size and press [Execute]	
001	A3SEF/12x18	[0~1/1] 0: A3 SEF, 1: 12” x 18”
002	EU China	[0~2/1] 0: 8½” x 13”, 1: 8” x 13”, 2: 8¼ “ x 13”
003	NA 1	[0~1/1] 0: 8½“ x 14”, 1: 8½“ x 13”
004	NA 2	[0~1/1] 0: LT LEF, 1: 10½“ x 7¼“
005	NA 3	[0~1/1] 0: LT SEF, 1: 8” x 10”
006	EU Taiwan	[0~1/1] 0: 8-Kai, 1: DLT
007	EU Taiwan	[0~1/1] 0: 16-Kai SEF, 1: LT
008	EU Taiwan	[0~1/1] 0: 16-Kai SEF, 1: LT SEF

6108	**Adj Fold: 1 Sheet**	Adjust Fold Position: 1 Sheet **Japan Only**
001	A3 SEF	[-75~+75/0.5 mm]
002	B4 SEF	
003	A4 SEf	
004	B5 SEF	
005	DLT SEF	
006	LG SEF	
007	LT SEF	
008	12"x18"	
009	Custom Size	

6109	**Adj Corner Staple**	Adjust Staple Position of Corner Stapler
	This SP corrects the stapling position of the corner stapler. [-3.5~+3.5/0.5 mm] - Value: Shifts the stapling position toward the rear of the machine. + Value: Shifts the stapling position toward the front of the machine. 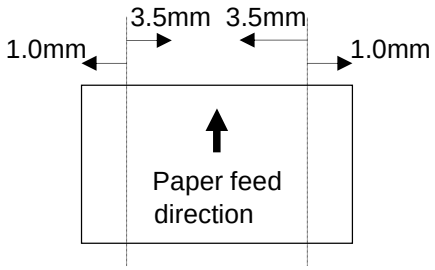 	

Downloaded from www.Manualslib.com manuals search engine

6111	Adj Z-Fold 2	Adjust Fold Position: Z-Fold Unit: Fold 2 **Japan Only**
	Adjusts the position of the second fold for the Z-folding unit.	

6112	Book Staple Adj	Adjust Booklet Stapling Position **Japan Only**
	This SP corrects the stapling postion of the booklet stapler when paper is stapled and folded.	
001	A3 SEF	[-75~+75/0.5 mm]
002	B4 SEF	+ Value: Shifts staple position toward the crease.
003	A4 SEF	- Value: Shifts staple position away from the crease.
004	B5 SEF	
005	DLT SEF	
006	LG SEF	
007	LT SEF	
008	12” x 18”	
009	Custom	

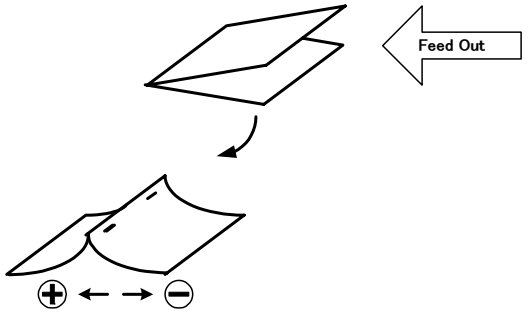

B132S923.WMF

6113	Book Fold Adj	Adjust Booklet Fold Position
	This SP corrects the folding postion when paper is stapled and folded.	
001	A3 SEF	[-3~+3/0.2 mm]
002	B4 SEF	+ Value: Shifts staple position toward the crease.
003	A4 SEf	- Value: Shifts staple position away from the crease.
004	B5 SEF	
005	DLT SEF	
006	LG SEF	
007	LT SEF	
008	12"x18"	
009	Custom Size	

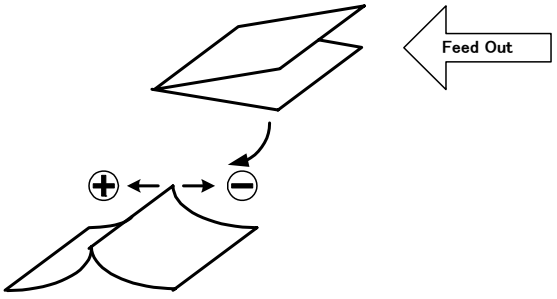

B132S924.WMF

6114	Book Fold Repeat	Set Number of Folds	
	This SP sets the number of times the folding rollers are driven forward and reverse to sharpen the crease of a folded booket before it exits the folding unit. When set at the default (0): • The folding blade presses the center of the stack into the nip of the folding roller. • The folding rollers rotated ccw to crease the booklet, reverse cw, then rotate ccw again crease the booklet fold twice before feeding to the folding unit exit rollers.		
	0:2Reps-6:30Reps	[0~6/1 reverse/forward feed.]	
		0: 2	4: 20
		1: 5	5: 25
		2: 10	6: 30
		3: 15	

Downloaded from www.Manualslib.com manuals search engine

6115	**Max Prestack**	Number of Pre-Stack Sheets
	This SP sets the number of sheets sent to the pre-stack tray. With this SP set to the default (3): • 3 sheets are sent to the pre-stack tray. • When the 4th sheet feeds, the 4th sheet and 3 sheets from the pre-stack tray are sent to the stapling tray together **Note**: You may need to adjust this setting or switch it off when feeding thick or slick paper.	
	0:None-3:3Shts	[0~3/1 sheet] 0: None 1: 1 sheet 2: 2 sheets 3: 3 sheets

6116	**Thk Sht Count**	Thick Sheet Count
	This SP sets the number of sheets of normal thickness to count for one thick sheet. The default (3) counts three sheets of normal thickness for one thick sheet. [1~3/1]	

6117	**Allow Tnk Punch**	Allow Punching of OHP Sheets
	This SP allows you to switch on punching of OHP sheets. Normally, OHP sheets cannot be punched. If this SP is switched on (1), the performance of the finisher cannot be guaranteed (the sheets may jam). [0~1/1]	

6118	**Output Jog On**	Output Jogger Operation Off/On
	This SP switches the jogging operation of the output jogger attached to the side of the finisher off and on. [0~1/1] 0: Off, 1: On **Note**: After installation of the Output Jogger Unit Type 3260 (B703), this SP must be set to "1" for the jogging motor to operate the jogging fences.	

6119	**No Z-Fold/Punch**	Prohibit Z-Folding and Punching **Japan Only**
	Switch Z-folding off and on. Default: **0** (Off) 0:No 1:Yes	

6120	**Free Run**	Free Run 1: Post Processing	
	These SPs set the peripherals list below in the free run mode for testing.		
001	Free Run 1	System Free Run	Finishers B701/B700, B706
002	Free Run 1	Free Run (Endurance Testing)	Finisher B706
003	Free Run 3	Free Run	**(Not Used)**
004	Free Run 4	Shift, Free Run	Finisher B706

Downloaded from www.Manualslib.com manuals search engine

6121	**Input Chk:Fin1**	Input Check: Finisher 1 (B700/B701) (☛5.8.1)
	These are the input checks for the 2000-Sheet/3000-Sheet Finishers B700/B701.	

6122	**Input Chk:Fin2**	Input Check: Finisher 2 (B706) (☛5.9.1)
	These are the input checks for the 3000-Sheet Finisher B706.	

6123	**Output Chk:Fin1**	Output Check: Finisher 1 (B700/B701) (☛5.8.2)
	These are the output checks for the 2000-Sheet/3000-Sheet Finishers B700/B701.	

6124	**Output Chk:Fin3**	Output Check: Finisher 3 **Japan Only**
	These are output checks for the 3000-Sheet Finishers.	
001	Proof JG SOL:	
002	Stp JG SOL:	
003	End Roll SOL	
004	Main M 1	
005	Main M 2	
006	Exit M	
007	Stapler M	
008	Punch M	
009	Tray Lift M	
010	Jogger M	
011	Stp Shift M	
012	Feed Out M	
013	Shift M	
014	Stp Rot M	

6125	**Output Chk:Fin2**	Output Check: Finisher 2 (B706) (☛5.9.2)
	These are the input checks for the 3000-Sheet Finisher B706.	

Downloaded from www.Manualslib.com manuals search engine

6126	**Book Fold Adj**	Adjusts the booklet folding position
	These SPs adjust the position for booklet stapling with the 2000/3000-Sheet Finisher B700. The initial setting is at "0" and can be adjusted in increments of 0.2 mm	
001	A3 SEF:Sub Scan	[-3 to +3/0.2 mm]
002	B4 SEF:Sub Scan	
003	A4 SEF:Sub Scan	
004	B5 SEF:Sub Scan	
005	DLT SEF:Sub Scan	
006	LG SEF:Sub Scan	
007	LT SEF:Sub Scan	
008	12"x18":Sub Scan	
009	Custom:Sub Scan	

6900	**ADF Bottom Lift**	ADF Bottom Lift Plate
	This SP setting determines whether the bottom plate lift motor of the of the ARDF switches on when the original is set in the ARDF original tray, or when the [Start] key is pressed. The ARDF bottom plate lift motor raises the bottom plate that pushes up the original tray and raises it to the optimum feed position. [0~1/1] 0: Bottom plate lifts immediately after originals are set (Default) 1: Bottom plate does not lift until [Start] key is pressed.	

Downloaded from www.Manualslib.com manuals search engine

Group 7000

7001	**Op Time Disp**	Main Motor Operation Time
	Displays the total drum rotation time.	

7401	**Total SC Counter**	Total SC Counter
	Displays the total number of SCs logged.	

7403	**SC History**		
	001	Latest	Displays the latest 10 SC codes.
	002	Latest 1st	
	003	Latest 2nd	
	004	Latest 3rd	
	005	Latest 4th	
	006	Latest 5th	
	007	Latest 6th	
	008	Latest 7th	
	009	Latest 8th	
	010	Latest 9th	

7502	**Total Paper Jam Counter**	
	Displays the total number of copy jams.	

7503	**Total Original Jam Counter**	
	Displays the total number of copy jams.	

Downloaded from www.Manualslib.com manuals search engine

7504	**Paper Jam Loc**	Paper Jam Locations - **Copier**
	Displays the list of possible locations where a jam could have occurred. Press the appropriate key to display the jam count for that location. These jams are caused by the failure of a sensor to activate.	
	On Operation Panel	**Actual Component Name**
008	Trans 1 Sn:Late	1st Vertical Transport Sensor
009	Trans 2 Sn:Late	2nd Vertical Transport Sensor
010	Trans 3 Sn:Late	3rd Vertical Transport Sensor
011	Trans 4 Sn:Late	4th Vertical Transport Sensor
012	Relay Sn: Late	Relay Senosor
013	Reg Sn:Late	Registration Sensor
014	Fusing Ex Sn:Late	Fusing Exit Sensor
016	Main Ex Sn:Late	Paper Exit Sensor
019	Dup Ent Sn:Late	Duplex Entrance Sensor
020	Dup Trans Sn1:Late	Duplex Transport Sensor 1
021	Dup Trans Sn2:Late	Duplex Transport Sensor 2
022	Dup Trans Sn3:Late	Duplex Transport Sensor 3
023	Dup Ent Sn:Late	Duplex Entrance Sensor
024	LCT Relay	LCT Relay Sensor:Late
034	Bypass PE Sn:Off	Bypass Paper End Sensor
053	1st Feed Sn:Lag	1st Paper Feed Sensor:Lag
054	2nd Feed Sn:Lag	2nd Paper Feed Sensor:Lag
055	3rd Feed Sn:Lag	3rd Paper Feed Sensor:Lag
056	4th Feed Sn:Lag	4th Paper Feed Sensor:Lag
057	LCT Feed Sn:Lag	LCT Paper Feed Sensor
058	Trans 1 Sn:Lag	1st Vertical Transport Sensor:Lag
059	Trans 2 Sn:Lag	2nd Vertical Transport Sensor:Lag
060	Trans 3 Sn:Lag	3rd Vertical Transport Sensor:Lag
061	Trans 4 Sn:Lag	4th Vertical Transport Sensor:Lag
062	Relay Sn:Lag	Relay Sensor:Lag
063	Reg Sn:Lag	Registration Sensor
064	Fusing Ex Sn:Lag	Fusing Exit Sensor:Lag
066	Main Ex Sn:Lag	Main Exit Sensor
069	Dup Ent Sn:Lag	Duplex Entrance Sensor
071	Dup Trans Sn2:Lag	Duplex Transport Sensor 1
072	Dup Trans Sn3:Lag	Duplex Transport Sensor 2
074	LCT Relay Sn:Lag	LCT Relay Sensor:Lag
078	Dummy TBelt Sn	Dummy Transfer Belt Sensor
084	Bypass Feed Sn	Bypass Paper Feed Sensor
098	Paper Type	Paper Type
099	Bypass Paper Feed Sn	Bypass Paper Feed Sensor

Downloaded from www.Manualslib.com manuals search engine

7504	**Paper Jam Loc**	Paper Jam Locations - **3000-Sheet Finisher (Japan Only)**
	Displays the list of possible locations where a jam could have occurred. Press the appropriate key to display the jam count for that location. These jams are caused by the failure of a sensor to activate.	
	On Operation Panel	**Actual Component Name**
121	Entrance Jam	Entrance Sensor
122	Proof Tray Exit	Proof Tray Exit Sensor
123	Shift Tray Exit	Shift Tray Exit Sensor
124	Stapler Exit	Stapler Exit Sensor
125	Exit After Jogging	Exit Sensor After Jogging
126	Corner Stapling	Corner Stapling: Stapler Unit 1
127	Saddle Stapling	Saddle-Stitch Stapler Unit
128	Paper Folding	Paper Folding
129	Shift Tray Motor	Shift Tray Motor
130	Jog Fence Motor	Jogger Fence Motor
131	Shift Roller Motor	Shift Roller Motor
132	Stapler Shift M	Stapler Shift Motor
133	Stapler M	Stapler Motor: Unit 2
134	Folder Plate M	Folder Plate Motor
135	Feed Out Belt M	Feed Out Belt Motor
136	Paper Punch Motor	Paper Punch Motor
137	Z-Folding	Z-Fold Jam

7504	**Paper Jam Loc**	Paper Jam Locations - **3000-Sheet Finisher B706**
	Displays the list of possible locations where a jam could have occurred. Press the appropriate key to display the jam count for that location. These jams are caused by the failure of a sensor to activate.	
	On Operation Panel	**Actual Component Name**
141	Entrance Sn	Entrance Sensor
142	Proof Tray Exit Sn	Proof Tray Exit Sn
143	Shift Exit Sn	Shift Exit Sn
144	Stapler Exit	Stapler Exit Sensor
145	Feed Out	Feed Out
148	Upper Trans M	Upper Transport Motor
149	Shift Tray Motor	Shift Tray Motor
150	Jogger Fence Motor	Jogger Fence Motor
151	Shift Roller Motor	Shift Roller Motor
153	Stapling Motor	Stapling Motor
155	Feed Out Belt Motor	Feed Out Belt Motor
156	Paper Punch Motor	Paper Punch Motor
157	Bad PC Command	Command from PC Incorrect

Downloaded from www.Manualslib.com manuals search engine

7504	Paper Jam Loc	Paper Jam Locations - **Mail Box B762**
	Displays the list of possible locations where a jam could have occurred. Press the appropriate key to display the jam count for that location. These jams are caused by the failure of a sensor to activate.	
	On Operation Panel	**Actual Component Name**
161	Vert Trans Sn 1	Vertical Transport Sensor 1
162	Vert Trans Sn 2	Vertical Transport Sensor 2
163	Vert Trans Sn 3	Vertical Transport Sensor 3
164	Vert Trans Sn 4	Vertical Transport Sensor 4
165	Vert Trans Sn 5	Vertical Transport Sensor 5

7504	Paper Jam Loc	Paper Jam Locations - **B704 Cover Interposer Tray**
	Displays the list of possible locations where a jam could have occurred. Press the appropriate key to display the jam count for that location. These jams are caused by the failure of a sensor to activate.	
	On Operation Panel	**Actual Component Name**
166	Paper Feed Sn	Paper Feed Sensor
167	Vert Transport Path	Vertical Transport Path
168	BotPlt Pos Sn	Bottom Plate Position Sensor

7504	Paper Jam Loc	Paper Jam Locations - **3000-Sheet Finisher B701**
	Displays the list of possible locations where a jam could have occurred. Press the appropriate key to display the jam count for that location. These jams are caused by the failure of a sensor to activate.	
	On Operation Panel	**Actual Component Name**
171	Entrance Trans	Entrance Sensor
172	Proof Tray Exit Sn	Proof Tray Exit Sn
173	Shift Exit Sn	Shift Exit Sensor
174	Stapler Exit Sn	Stapler Exit Sensor
175	Belt Feed Out	Belt Feed Out
176	Corner Staple	Corner Stapling
179	Shift Tray Motor	Shift Tray Motor
180	Jogger Fence Motor	Jogger Fence Motor
181	Shift Roller Motor	Shift Roller Motor
182	Stapler Shift M	Stapler Shift Motor
183	Stapling Motor	Stapling Motor
185	Feed Out Belt Motor	Feed Out Belt Motor
186	Paper Punch Motor	Paper Punch Motor

Downloaded from www.Manualslib.com manuals search engine

7504	**Paper Jam Loc**	Paper Jam Locations – **2000-Sheet Booklet Finisher B700**
	Displays the list of possible locations where a jam could have occurred. Press the appropriate key to display the jam count for that location. These jams are caused by the failure of a sensor to activate.	
	On Operation Panel	**Actual Component Name**
191	Entrance Sn	Entrance Sensor
192	Stapler Exit	Stapler Exit Sensor
193	Shift Exit Sn	Shift Exit Sensor
194	Stapler Exit	Stapler Exit Sensor
195	Belt Feed Out	Belt Feed Out
196	Corner Staple	Corner Stapling
197	Saddle Stapling	Saddle Stapling
198	Paper Folding	Paper Folding
199	Shift Tray Motor	Shift Tray Motor
200	Jogger Fence Motor	Jogger Fence Motor
201	Shift Roller Motor	Shift Roller Motor
202	Stapler Shift M	Stapler Shift Motor
203	Stapling Motor	Stapling Motor
204	Paper Folding	Paper Folding
205	Feed Out Belt Motor	Feed Out Belt Motor
206	Paper Punch Motor	Paper Punch Motor

7504	**Paper Jam Loc**	Paper Jam Locations – **Z-Folding Unit B660** (**Japan Only**)
	Displays the list of possible locations where a jam could have occurred. Press the appropriate key to display the jam count for that location. These jams are caused by the failure of a sensor to activate.	
	On Operation Panel	**Actual Component Name**
211	Paper Feed:Late	Paper Feed Sensor: Late
212	Paper Feed:Lag	Paper Feed Sensor: Lag
213	Fold Timing Sn:Late	Fold Timing Sensor: Late
214	Fold Timing Sn:Lag	Fold Timing Sensor: Lag
215	Lead Edge Sn:Late	Leading Edge Sensoor:Late
216	Lead Edge Sn:Lag	Leading Edge Sensor:Lag
217	Up Stopper Sn:Late	Upper Stopper Path Sensor:Late
218	Up Stopper Sn:Lag	Upper Stopper Path Sensor:Lag
219	Lower Ex Sn:Late	Lower Exit Sensor:Late
220	Lower Ex Sn1:Lag	Lower Exit Sensor:Lag
223	Up Ex Sn:Late	Upper Exit Sensor:Late
224	Up Ex Sn:Lag	Upper Exit Sensor:Lag
225	Paper Fold M	Paper Fold Motor
226	Lower Stopper M	Lower Stopper Motor Lock
227	Upper Stopper M	Upper Stopper Motor Lock

Downloaded from www.Manualslib.com manuals search engine

7504	**Paper Jam Loc**	Paper Jam Location – **All Finishers**
	Displays the list of possible locations where a jam could have occurred. Press the appropriate key to display the jam count for that location. These jams are caused by the failure of a sensor to activate.	
	On Operation Panel	**Actual Component Name**
230	Fin:No Ex Response	Finisher:No Exit Response

7505	**Original Jam Det**	Original Jam Detection – **ARDF**
	Displays the list of possible locations where a jam could have occurred. Press the appropriate key to display the jam count for that location. These jams are caused by the failure of a sensor to activate.	
	On Operation Panel	**Actual Component Name**
001	At Power On	At Power On
003	Separation Sn:Late	Separation Sensor:Late
004	Skew Cor Sn:Late	Skew Correction Sensor:Late
005	Interval Sn:Late	Interval Sensor:Late
006	Reg Sn:Late	Registration Sensor:Late
007	Exit Sn:Late	Exit Sensor:Late
008	Inv Switch Sn:Late	Inverter Switchback Sensor:Late
009	Low Inv Sn:Late	Lower Inverter Sensor:Late
053	Separation Sn:Lag	SeparationsSensor:Lag
054	Skew Cor Sn:Lag	Skew Correction Sensor:Lag
055	Interval Sn:Lag	Interval Sensor:Lag
056	Reg Sn:Lag	Registration Sensor:Lag
057	Exit Sn:Lag	Exit Sensor:Lag
058	Inv Switch Sn:Lag	Inverter Switchback Sensor:Lag
059	Low Inv Sn:Lag	Lower Inverter Sensor:Lag

Downloaded from www.Manualslib.com manuals search engine

7506	Jam Count by Paper Size	
	Displays the total number of jams by paper size.	
005	A4 LEF	Displays the total number of jams by paper size.
006	A5 LEF	
014	B5 LEF	
038	LT LEF	
044	HLT LEF	
132	A3	
133	A4 SEF	
134	A5 SEF	
141	B4 SEF	
142	B5 SEF	
160	DLT SEF	
164	LG SEF	
166	LT SEF	
172	HLT SEF	
255	Others	

7507	Plotter Jam History	
001	Latest	Displays the following items for the last 10 copy paper jams: 1) Jam code, 2) Paper size, 3) Total count when jam occurred, 4) Date of jam. The “jam codes” are listed in the SMC report under SP7504.
002	Latest 1	
003	Latest 2	
004	Latest 3	
005	Latest 4	
006	Latest 5	
007	Latest 6	
008	Latest 7	
009	Latest 8	
010	Latest 9	

7508	Original Jam History	
001	Original Latest	Displays the following items for the Latest 10 original jams: 1) Jam code, 2) Paper size, 3) Total count when jam occurred, 4) Date of jam. The “jam codes” are listed in the SMC report under SP7504.
002	Latest 1	
003	Latest 2	
004	Latest 3	
005	Latest 4	
006	Latest 5	
007	Latest 6	
008	Latest 7	
009	Latest 8	
010	Latest 9	

Downloaded from www.Manualslib.com manuals search engine

7617	Parts PM Counter Display	
001	Normal	**Japan Only**
002	DF	**Japan Only**

7618	PM Parts Counter Reset Japan Only	
001	Normal	Press [Execute] to clear the parts replacement alarm counter for the main machine.
002	DF	Press [Execute] to clear the parts replacement alarm counter for the ADF.

7801	ROM Ver	ROM Version Numbers
	Displays the ROM version numbers of the main machine and connected peripheral devices.	

7803	PM Counter Display	Displays the PM count since the last PM.

7804	PM Counter Reset	Resets the PM count.

7807	SC/Jam Counter Reset	Press [Start] to reset the SC and jam counters.

7826	MF Error Counter Japan Only	
	Displays the number of counts requested of the card/key counter**.**	
001	Error Total	A request for the count total failed at power on. This error will occur if the device is installed but disconnected.
002	Error Staple	The request for a staple count failed at power on. This error will occur if the device is installed but disconnected.

7827	MF Error Counter Clear
	Press Execute to reset to 0 the values of SP7826. **Japan Only**

7832	Self-Diagnostic Report Details
	Press [#] to display a list of error codes. Nothing is displayed if no errors have occurred.

7834	Coverage Clear	
	No information is available at this time.	
	001	Total Average
	002	Toner
	003	Sheets & Toner
	004	Dot:0%-100%
	255	All Counts

Downloaded from www.Manualslib.com manuals search engine

7835	ACC Counter	
	No information is available at this time.	
001	Copy ACC	
002	Printer ACC	

7836	Total Memory Size
	Displays the contents of the memory on the controller board.

7852	ADF Scan Glass	ADF Scan Glass
	Displays the count for the number of times the machine has detected dust on the ARDF scanning glass at the beginning of copy jobs. This SP operates only after SP4020 001 has been turned on.	
001	Dust Counter	
002	Clear Counter	

7901	Assert Info. . DFU	
001	Filename	Used for debugging.
002	Line No.	
003	Value	

7931	Toner Info:K	Toner Information: Black
7932	Toner Info:M	Toner Information: Magenta
7933	Toner Info:C	Toner Information: Cyan
7934	Toner Info:Y	Toner Information: Yellow
	Displays detailed information about the toner used in the machine.	
001	Model ID	
002	Cartridge Ver	
003	Brand ID	
004	Area ID	
005	Production ID	
006	Color ID	
007	Maintenance ID	
008	New	
009	Recycle Count	
010	Product Date	
011	Serial No	
012	EDP Code	
013	Toner Remaining	
014	Toner End	
015	Toner Refill	
020	Total Count Start	
021	Color Count:Start	
022	Total Count End	
023	Color Count:End	
050	Set Date	
051	End Date	

Downloaded from www.Manualslib.com manuals search engine

7935	MotdrvtimeDisp	Motor Drive Time Display
	These SPs display the total drive times for each of motor listed below. The 8-digit display shows the total in minutes.	
001	OPCMot:K	Drum Motors
002	OPCMot:M	
003	OPCMot:C	
004	OPCMot:Y	
005	DrvMot:K	PCU motor (drives all components of PCU other than the drum)
006	DrvMot:M	
007	DrvMot:C	
008	DrvMot:Y	
009	Image Trans Mot	Image Transfer Motor
010	Paper Trans Mot	Paper Feed Motor
011	Fusing Exit Mot	Fusing Exit Motor

7936	TtldrvtimeDisp	Total Drive Time Display
	This SP displays the total drive time of the K drum motor before the last reset.	

7937	MotdrvtimeRst	Motor Drive Time Reset
	These SPs allow you to reset (to zero) the total drive time for each motor listed below.	
001	OPCMot:K	Drum Motors
002	OPCMot:M	
003	OPCMot:C	
004	OPCMot:Y	
005	DrvMot:K	PCU motor (drives all components of PCU other than the drum)
006	DrvMot:M	
007	DrvMot:C	
008	DrvMot:Y	
009	Image Trans Mot	Image Transfer Motor
010	Paper Trans Mot	Paper Feed Motor
011	Fusing Exit Mot	Fusing Exit Motor

7999	Engine Debug Log Switch	DFU
	Used for design and testing.	

Downloaded from www.Manualslib.com manuals search engine

Group 8000

Current Status of the SP8xxx Counters

Many of these counters are provided for features that are currently not available, such as sending color faxes, and so on. However, here are some Group 8 codes that when used in combination with others, can provide useful information.

SP Numbers	What They Do
SP8 211~SP8 216	The number of pages scanned to the document server.
SP8 401~SP8 406	The number of pages printed from the document server
SP8 691~SP8 696	The number of pages sent from the document server

Specifically, the following questions can be answered:

- How is the document server actually being used?
- What application is using the document server most frequently?
- What data in the document server is being reused?

Downloaded from www.Manualslib.com manuals search engine

Group 8 Service Table Keys

Many of the SPs in this group are prefixed with a letter that indicates the mode of operation (the mode of operation is referred to as an 'application'). Before reading the Group 8 Service Table, make sure that you understand what these prefixes mean.

PREFIXES	WHAT IT MEANS	
T:	Total: (Grand Total).	Grand total of the items counted for all applications (C, F, P, etc.)..
C:	Copy application.	Totals (pages, jobs, etc.) executed for each application when the job was *not* stored on the document server.
P:	Print application.	
S:	Scan application.	
L:	Local storage (document server)	Totals (jobs, pages, etc.) for the document server. The L: counters work differently case by case. Sometimes, they count jobs/pages stored on the document server; this can be in document server mode (from the document server window), or from another mode, such as from a printer driver or by pressing the Store File button in the Copy mode window. Sometimes, they include occasions when the user uses a file that is already on the document server. Each counter will be discussed case by case.
O:	Other applications (external network applications, for example)	Refers to network applications such as Web Image Monitor.

Downloaded from www.Manualslib.com manuals search engine

The Group 8 SP codes are limited to 17 characters, forced by the necessity of displaying them on the small LCDs of printers and faxes that also use these SPs. Read over the list of abbreviations below and refer to it again if you see the name of an SP that you do not understand.

ABBREVIATION	WHAT IT MEANS
/	"By", e.g. "T:Jobs/Apl" = Total Jobs "by" Application
>	More (2> "2 or more", 4> "4 or more"
AddBook	Address Book
Apl	Application
B/W	Black & White
Bk	Black
C	Cyan
ColCr	Color Create
ColMode	Color Mode
Comb	Combine
Comp	Compression
Deliv	Delivery
DesApl	Designated Application. The application (Copy, Fax, Scan, Print) used to store the job on the document server, for example.
Dev Counter	Development Count, no. of pages developed.
Dup, Duplex	Duplex, printing on both sides
Emul	Emulation
FC	Full Color
FIN	Post-print processing, i.e. finishing (punching, stapling, etc.)
Full Bleed	No Margins
GenCopy	Generation Copy Mode
GPC	Get Print Counter. For jobs 10 pages or less, this counter does not count up. For jobs larger than 10 pages, this counter counts up by the number that is in excess of 10 (e.g., for an 11-page job, the counter counts up 11-10 =1)
IFax	Internet Fax
ImgEdt	Image Edit performed on the original with the copier GUI, e.g. border removal, adding stamps, page numbers, etc.
K	Black (YMCK)
LS	Local Storage. Refers to the document server.
LSize	Large (paper) Size
Mag	Magnification
MC	One color (monochrome)
NRS	New Remote Service, which allows a service center to monitor machines remotely. "NRS" is used overseas, "CSS" is used in Japan.
Org	Original for scanning
OrgJam	Original Jam
Palm 2	Print Job Manager/Desk Top Editor **(Not used)**: A pair of utilities that allows print jobs to be distributed evenly among the printers on the network, and allows files to moved around, combined, and converted to different formats.
PC	Personal Computer
PGS	Pages. A page is the total scanned surface of the original. Duplex pages count as two pages, and A3 simplex count as two pages if the A3/DLT counter SP is switched ON.
PJob	Print Jobs

Downloaded from www.Manualslib.com manuals search engine

ABBREVIATION	WHAT IT MEANS
Ppr	Paper
PrtJam	Printer (plotter) Jam
PrtPGS	Print Pages
R	Red (Toner Remaining). Applies to the wide format model A2 only. This machine is under development and currently not available. **(Not Used)**
Rez	Resolution
SC	Service Code (Error SC code displayed)
Scn	Scan
Sim, Simplex	Simplex, printing on 1 side.
S-to-Email	Scan-to-E-mail
SMC	SMC report printed with SP5990. All of the Group 8 counters are recorded in the SMC report.
Svr	Server
TonEnd	Toner End
TonSave	Toner Save
TXJob	Send, Transmission
YMC	Yellow, Magenta, Cyan
YMCK	Yellow, Magenta, Cyan, BlacK

NOTE: All of the Group 8 SPs are reset with SP5801 1 Memory All Clear, or the Counter Reset SP7808.

Downloaded from www.Manualslib.com manuals search engine

SP8-xxx: Data Log2

8 001	T:Total Jobs	These SPs count the number of times each application is used to do a job. [0~9999999/ 1] **Note**: The L: counter is the total number of times the other applications are used to send a job to the document server, plus the number of times a file already on the document server is used.
8 002	C:Total Jobs	
8 004	P:Total Jobs	
8 005	S:Total Jobs	
8 006	L:Total Jobs	

- These SPs reveal the number of times an application is used, not the number of pages processed.
- When an application is opened for image input or output, this counts as one job.
- Interrupted jobs (paper jams, etc.) are counted, even though they do not finish.
- Only jobs executed by the customer are counted. Jobs executed by the service engineer using the SP modes are not counted.
- When using secure printing (when a password is required to start the print job), the job is counted at the time when either “Delete Data” or “Specify Output” is specified.
- When a copy job on the document server is printed, SP8022 also increments, and when a print job stored on the document server is printed, SP8024 also increments.
- When an original is both copied and stored on the document server, the C: and L: counters both increment.
- When a print job is stored on the document server, only the L: counter increments.
- When the user presses the Document Server button to store the job on the document server, only the L: counter increments.
- When the user enters document server mode and prints data stored on the document server, only the L: counter increments.
- When an image received from Palm 2 is received and stored, the L: counter increments.

Downloaded from www.Manualslib.com manuals search engine

8 011	T:Jobs/LS	These SPs count the number of jobs stored to the document server by each application, to reveal how local storage is being used for input. [0~9999999/ 1] The L: counter counts the number of jobs stored from within the document server mode screen at the operation panel.
8 012	C:Jobs/LS	
8 014	P:Jobs/LS	
8 015	S:Jobs/LS	
8 016	L:Jobs/LS	
8 017	O:Jobs/LS	

- When a scan job is sent to the document server, the S: counter increments. When you enter document server mode and then scan an original, the L: counter increments.
- When a print job is sent to the document server, the P: counter increments.
- When a network application sends data to the document server, the O: counter increments.
- When an image from Palm 2 is stored on the document server, the O: counter increments.

8 021	T:Pjob/LS	These SPs reveal how files printed from the document server were stored on the document server originally. [0~9999999/ 1] The L: counter counts the number of jobs stored from within the document server mode screen at the operation panel.
8 022	C:Pjob/LS	
8 024	P:Pjob/LS	
8 025	S:Pjob/LS	
8 026	L:Pjob/LS	
8 027	O:Pjob/LS	

- When a copy job stored on the document server is printed with another application, the C: counter increments.
- When an application like DeskTopBinder merges a copy job that was stored on the document server with a print job that was stored on the document server, the C: and P: counters both increment.
- When a job already on the document server is printed with another application, the L: counter increments.
- When a scanner job stored on the document server is printed with another application, the S: counter increments. If the original was scanned from within document server mode, then the L: counter increments.
- When images stored on the document server by a network application (including Palm 2), are printed with another application, the O: counter increments.
- When a copy job stored on the document server is printed with a network application (Web Image Monitor, for example), the C: counter increments.

Downloaded from www.Manualslib.com manuals search engine

8 031	T:Pjob/DesApl	These SPs reveal what applications were used to output documents from the document server. [0~9999999/ 1] The L: counter counts the number of jobs printed from within the document server mode screen at the operation panel.
8 032	C:Pjob/DesApl	
8 034	P:Pjob/DesApl	
8 035	S:Pjob/DesApl	
8 036	L:Pjob/DesApl	
8 037	O:Pjob/DesApl	

- When documents already stored on the document server are printed, the count for the application that started the print job is incremented.
- When the print job is started from a network application (Desk Top Binder, Web Image Monitor, etc.) the L: counter increments.

8 041	T:TX Jobs/LS	These SPs count the applications that stored files on the document server that were later accessed for transmission over the telephone line or over a network (attached to an e-mail). [0~9999999/ 1] **Note**: Jobs merged for sending are counted separately. The L: counter counts the number of jobs scanned from within the document server mode screen at the operation panel.
8 042	C:TX Jobs/LS	
8 044	P:TX Jobs/LS	
8 045	S:TX Jobs/LS	
8 046	L:TX Jobs/LS	
8 047	O:TX Jobs/LS	

- When a stored copy job is sent from the document server, the C: counter increments.
- When images stored on the document server by a network application or Palm2 are sent as an e-mail, the O: counter increments.

8 051	T:TX Jobs/DesApl	These SPs count the applications used to send files from the document server over the telephone line or over a network (attached to an e-mail. [0~9999999/ 1] The L: counter counts the number of jobs sent from within the document server mode screen at the operation panel.
8 052	C:TX Jobs/DesApl	
8 054	P:TX Jobs/DesApl	
8 055	S:TX Jobs/DesApl	
8 056	L:TX Jobs/DesApl	
8 057	O:TX Jobs/DesApl	

- If the send is started from Desk Top Binder or Web Image Monitor, for example, then the O: counter increments.

Downloaded from www.Manualslib.com manuals search engine

8 061	T:FIN Jobs	[0~9999999/ 1]
	These SPs total the finishing methods. The finishing method is specified by the application.	
8 062	C:FIN Jobs	[0~9999999/ 1]
	These SPs total finishing methods for copy jobs only. The finishing method is specified by the application.	
8 064	P:FIN Jobs	[0~9999999/ 1]
	These SPs total finishing methods for print jobs only. The finishing method is specified by the application.	
8 065	S:FIN Jobs	[0~9999999/ 1]
	These SPs total finishing methods for scan jobs only. The finishing method is specified by the application. Note: Finishing features for scan jobs are not available at this time.	
8 066	L:FIN Jobs	[0~9999999/ 1]
	These SPs total finishing methods for jobs output from within the document server mode screen at the operation panel. The finishing method is specified from the print window within document server mode.	
8 067	O:FIN Jobs	[0~9999999/ 1]
	These SPs total finishing methods for jobs executed by an external application, over the network. The finishing method is specified by the application.	
8 06x 1	Sort	Number of jobs started in Sort mode. When a stored copy job is set for Sort and then stored on the document server, the L: counter increments. (See SP8 066 1)
8 06x 2	Stack	Number of jobs started out of Sort mode.
8 06x 3	Staple	Number of jobs started in Staple mode.
8 06x 4	Booklet	Number of jobs started in Booklet mode. If the machine is in staple mode, the Staple counter also increments.
8 06x 5	Z-Fold	Number of jobs started In any mode other than the Booklet mode and set for folding (Z-fold).
8 06x 6	Punch	Number of jobs started in Punch mode. When Punch is set for a print job, the P: counter increments. (See SP8 064 6.)
8 06x 7	Other	Reserved. Not used.

Downloaded from www.Manualslib.com manuals search engine

8 071	T:Jobs/PGS	[0~9999999/ 1]	
	These SPs count the number of jobs broken down by the number of pages in the job, regardless of which application was used.		
8 072	C:Jobs/PGS	[0~9999999/ 1]	
	These SPs count and calculate the number of copy jobs by size based on the number of pages in the job.		
8 074	P:Jobs/PGS	[0~9999999/ 1]	
	These SPs count and calculate the number of print jobs by size based on the number of pages in the job.		
8 075	S:Jobs/PGS	[0~9999999/ 1]	
	These SPs count and calculate the number of scan jobs by size based on the number of pages in the job.		
8 076	L:Jobs/PGS	[0~9999999/ 1]	
	These SPs count and calculate the number of jobs printed from within the document server mode window at the operation panel, by the number of pages in the job.		
8 077	O:Jobs/PGS	[0~9999999/ 1]	
	These SPs count and calculate the number of “Other” application jobs (Web Image Monitor, Palm 2, etc.) by size based on the number of pages in the job.		
8 07x 1	1 Page	8 07x 8	21~50 Pages
8 07x 2	2 Pages	8 07x 9	51~100 Pages
8 07x 3	3 Pages	8 07x 10	101~300 Pages
8 07x 4	4 Pages	8 07x 11	301~500 Pages
8 07x 5	5 Pages	8 07x 12	501~700 Pages
8 07x 6	6~10 Pages	8 07x 13	701~1000 Pages
8 07x 7	11~20 Pages	8 07x 14	1001~ Pages

- For example: When a copy job stored on the document server is printed in document server mode, the appropriate L: counter (SP8076 0xx) increments.
- Interrupted jobs (paper jam, etc.) are counted, even though they do not finish.
- If a job is paused and re-started, it counts as one job.
- If the finisher runs out of staples during a print and staple job, then the job is counted at the time the error occurs.
- For copy jobs (SP 8072) and scan jobs (SP 8075), the total is calculated by multiplying the number of sets of copies by the number of pages scanned. (One duplex page counts as 2.)
- The first test print and subsequent test prints to adjust settings are added to the number of pages of the copy job (SP 8072).
- When printing the first page of a job from within the document server screen, the page is counted.

Downloaded from www.Manualslib.com manuals search engine

8 131	T:S-to-Email Jobs		[0~9999999/ 1]
	These SPs count the total number of jobs scanned and attached to an e-mail, regardless of whether the document server was used or not.		
8 131 1	B/W	Count for the number of jobs with black-and-white.	
8 131 2	Color	Count for the number of jobs with color.	
8 131 3	ACS	Count for the number of jobs using ACS mode.	
8 135	S:S-to-Email Jobs		
	These SPs count the number of jobs scanned and attached to an e-mail, without storing the original on the document server.		
8 135 1	B/W	Count for the number of jobs with black-and-white.	
8 135 2	Color	Count for the number of jobs with color.	
8 131 3	ACS	Count for the number of jobs using ACS mode.	

- These counters count jobs, not pages.
- If the job is stored on the document server, after the job is stored it is determined to be color or black-and-white then counted.
- If the job is cancelled during scanning, or if the job is cancelled while the document is waiting to be sent, the job is not counted.
- If the job is cancelled during sending, it may or may not be counted, depending on what stage of the process had been reached when the job was cancelled.
- If several jobs are combined for sending to the Scan Router, Scan-to-Email, or Scan-to-PC, or if one job is sent to more than one destination. each send is counted separately. For example, if the same document is sent by Scan-to-Email as well as Scan-to-PC, then it is counted twice (once for Scan-to-Email and once for Scan-to-PC).

Downloaded from www.Manualslib.com manuals search engine

8 141	T:Deliv Jobs/Svr		[0~9999999/ 1]
	These SPs count the total number of jobs scanned and sent to a Scan Router server.		
8 141 1	B/W	Count for the number of jobs with black-and-white.	
8 141 2	Color	Count for the number of jobs with color.	
8 141 3	ACS	Count for the number of jobs using ACS mode.	
8 143 3	ACS	Count for the number of jobs using ACS mode.	
8 145	S:Deliv Jobs/Svr		
	These SPs count the number of jobs scanned in scanner mode and sent to a Scan Router server.		
8 145 1	B/W	Count for the number of jobs with black-and-white.	
8 145 2	Color	Count for the number of jobs with color.	
8 145 3	ACS	Count for the number of jobs using ACS mode.	

- These counters count jobs, not pages.
- The jobs are counted even though the arrival and reception of the jobs at the Scan Router server cannot be confirmed.
- If even one color image is mixed with black-and-white images, then the job is counted as a “Color” job.
- If the job is cancelled during scanning, or if the job is cancelled while the document is waiting to be delivered, the job is not counted.
- If the job is cancelled during sending, it may or may not be counted, depending on what stage of the process had been reached when the job was cancelled.
- Even if several files are combined for sending, the transmission counts as one job.

8 151	T:Deliv Jobs/PC		[0~9999999/ 1]
	These SPs count the total number of jobs scanned and sent to a folder on a PC (Scan-to-PC). **Note**: At the present time, 8 151 and 8 155 perform identical counts.		
8 151 1	B/W	Count for the number of jobs with black-and-white.	
8 151 2	Color	Count for the number of jobs with color.	
8 151 3	ACS	Count for the number of jobs using ACS mode.	
8 155	S:Deliv Jobs/PC		
	These SPs count the total number of jobs scanned and sent with Scan-to-PC.		
8 155 1	B/W	Count for the number of jobs with black-and-white.	
8 155 2	Color	Count for the number of jobs with color.	
8 155 3	ACS	Count for the number of jobs using ACS mode.	

- These counters count jobs, not pages.
- If the job is cancelled during scanning, it is not counted.
- If the job is cancelled while it is waiting to be sent, the job is not counted.
- If the job is cancelled during sending, it may or may not be counted, depending on what stage of the process had been reached when the job was cancelled.
- Even if several files are combined for sending, the transmission counts as one job.

Downloaded from www.Manualslib.com manuals search engine

8 191	T:Total Scan PGS	These SPs count the pages scanned by each application that uses the scanner to scan images. [0~9999999/ 1]
8 192	C:Total Scan PGS	
8 195	S:Total Scan PGS	
8 196	L:Total Scan PGS	

- SP 8 191 to 8 196 count the number of scanned sides of pages, not the number of physical pages.
- These counters do not count reading user stamp data, or reading color charts to adjust color.
- Previews done with a scanner driver are not counted.
- A count is done only after all images of a job have been scanned.
- Scans made in SP mode are not counted.

Examples

- If 3 B5 pages and 1 A3 page are scanned with the scanner application but not stored, the S: count is 4.
- If both sides of 3 A4 sheets are copied and stored to the document server using the Store File button in the Copy mode window, the C: count is 6 and the L: count is 6.
- If both sides of 3 A4 sheets are copied but not stored, the C: count is 6.
- If you enter document server mode then scan 6 pages, the L: count is 6.

Downloaded from www.Manualslib.com manuals search engine

8 201	T:LSize Scan PGS	[0~9999999/ 1]
	These SPs count the total number of large pages input with the scanner for scan and copy jobs. **Note**: These counters are displayed in the SMC Report, and in the User Tools display.	
8 205	S:LSize Scan PGS	[0~9999999/ 1]
	These SPs count the total number of large pages input with the scanner for scan jobs only **Note**: These counters are displayed in the SMC Report, and in the User Tools display..	
8 20x 1	A3/DLT, Larger	Counts A3/DLT and larger pages.
8 20x 2	A2, Larger	Counts A2 and larger pages.

8 211	T:Scan PGS/LS	These SPs count the number of pages scanned into the document server . [0~9999999/ 1] The L: counter counts the number of pages stored from within the document server mode screen at the operation panel, and with the Store File button from within the Copy mode screen
8 212	C:Scan PGS/LS	
8 215	S:Scan PGS/LS	
8 216	L:Scan PGS/LS	

- Reading user stamp data is not counted.
- If a job is cancelled, the pages output as far as the cancellation are counted.
- If the scanner application scans and stores 3 B5 sheets and 1 A4 sheet, the S: count is 4.
- If pages are copied but not stored on the document server, these counters do not change.
- If both sides of 3 A4 sheets are copied and stored to the document server, the C: count is 6 and the L: count is 6.
- If you enter document server mode then scan 6 pages, the L: count is 6.

Downloaded from www.Manualslib.com manuals search engine

8 221	ADF Org Feeds		[0~9999999/ 1]
	These SPs count the number of pages fed through the ADF for front and back side scanning.		
8 221 1	Front	Number of front sides fed for scanning: With an ADF that can scan both sides simultaneously, the Front side count is the same as the number of pages fed for either simplex or duplex scanning. With an ADF that cannot scan both sides simultaneously, the Front side count is the same as the number of pages fed for duplex front side scanning. (The front side is determined by which side the user loads face up.)	
8 221 2	Back	Number of rear sides fed for scanning: With an ADF that can scan both sides simultaneously, the Back count is the same as the number of pages fed for duplex scanning. With an ADF that cannot scan both sides simultaneously, the Back count is the same as the number of pages fed for duplex rear-side scanning.	

- When 1 sheet is fed for duplex scanning the Front count is 1 and the Back count is 1.
- If a jam occurs during the job, recovery processing is not counted to avoid double counting. Also, the pages are not counted if the jam occurs before the first sheet is output.

8 231	Scan PGS/Mode		[0~9999999/ 1]
	These SPs count the number of pages scanned by each ADF mode to determine the work load on the ADF.		
8 231 1	Large Volume	Selectable. Large copy jobs that cannot be loaded in the ADF at one time.	
8 231 2	SADF	Selectable. Feeding pages one by one through the ADF.	
8 231 3	Mixed Size	Selectable. Select “Mixed Sizes” on the operation panel.	
8 231 4	Custom Size	Selectable. Originals of non-standard size.	
8 231 5	Platen	Book mode. Raising the ADF and placing the original directly on the platen.	

- If the scan mode is changed during the job, for example, if the user switches from ADF to Platen mode, the count is done for the last selected mode.
- If the user selects “Mixed Sizes” for copying in the platen mode, the Mixed Size count is enabled.
- In the SADF mode if the user copies 1 page in platen mode and then copies 2 pages with SADF, the Platen count is 1 and the SADF count is 3.

Downloaded from www.Manualslib.com manuals search engine

8 241	T:Scan PGS/Org	[0~9999999/ 1]
	These SPs count the total number of scanned pages by original type for all jobs, regardless of which application was used.	
8 242	C:Scan PGS/Org	[0~9999999/ 1]
	These SPs count the number of pages scanned by original type for Copy jobs.	
8 245	S:Scan PGS/Org	[0~9999999/ 1]
	These SPs count the number of pages scanned by original type for Scan jobs.	
8 246	L:Scan PGS/Org	[0~9999999/ 1]
	These SPs count the number of pages scanned and stored from within the document server mode screen at the operation panel, and with the Store File button from within the Copy mode screen	

	8 241	**8 242**	**8 245**	**8 246**
8 24x 1: Text	Yes	Yes	Yes	Yes
8 24x 2: Text/Photo	Yes	Yes	Yes	Yes
8 24x 3: Photo	Yes	Yes	Yes	Yes
8 24x 4: GenCopy, Pale	Yes	Yes	Yes	Yes
8 24x 5: Map	Yes	Yes	Yes	Yes
8 24x 6: Normal/Detail	Yes	No	No	No
8 24x 7: Fine/Super Fine	Yes	No	No	No
8 24x 8: Binary	Yes	No	Yes	No
8 24x 9: Grayscale	Yes	No	Yes	No
8 24x 10: Color	Yes	No	Yes	No

- If the scan mode is changed during the job, for example, if the user switches from ADF to Platen mode, the count is done for the last selected mode.

Downloaded from www.Manualslib.com manuals search engine

8 251	T:Scan PGS/ImgEdt	These SPs show how many times Image Edit features have been selected at the operation panel for each application. Some examples of these editing features are: • Erase> Border • Erase> Center • Image Repeat • Centering • Positive/Negative [0~9999999/ 1] Note: The count totals the number of times the edit features have been used. A detailed breakdown of exactly which features have been used is not given.
8 252	C:Scan PGS/ImgEdt	
8 254	P:Scan PGS/ImgEdt	
8 256	L:Scan PGS/ImgEdt	
8 257	O:Scan PGS/ImgEdt	

The L: counter counts the number of pages stored from within the document server mode screen at the operation panel, and with the Store File button from within the Copy mode screen.

8 261	T:Scn PGS/ColCr	[0~9999999/ 1]
	These SPs count the total number of scanned pages by the color processing mode used.	
8 261 1	Color Conversion	
8 261 2	Color Erase	
8 261 3	Background	
8 261 4	Other	
8 262	C:Scn PGS/ColCr	[0~9999999/ 1]
	These SPs count the number of pages by the color processing mode used for Copy jobs only.	
8 262 1	Color Conversion	
8 262 2	Color Erase	
8 262 3	Background	
8 262 4	Other	

- These counters are enabled only for MFP machines that support color. The wide format machines do not support the “Background” or “Other” counters.

8 281	T:Scan PGS/TWAIN	These SPs count the number of pages scanned using a TWAIN driver. These counters reveal how the TWAIN driver is used for delivery functions. [0~9999999/ 1] **Note**: At the present time, these counters perform identical counts.
8 285	S:Scan PGS/TWAIN	

Downloaded from www.Manualslib.com manuals search engine

8 291	T:Scan PGS/Stamp	These SPs count the number of pages stamped with the stamp in the ADF unit. [0~9999999/ 1] The L: counter counts the number of pages stored from within the document server mode screen at the operation panel, and with the Store File button from within the Copy mode screen
8 295	S:Scan PGS/Stamp	
8 296	L:Scan PGS/Stamp	

8 301	T:Scan PGS/Size	[0~9999999/ 1]
	These SPs count by size the total number of pages scanned by all applications. Use these totals to compare original page size (scanning) and output (printing) page size [SP 8-441].	
8 302	C:Scan PGS/Size	[0~9999999/ 1]
	These SPs count by size the total number of pages scanned by the Copy application. Use these totals to compare original page size (scanning) and output (printing) page size [SP 8-442].	
8 305	S:Scan PGS/Size	[0~9999999/ 1]
	These SPs count by size the total number of pages scanned by the Scan application. Use these totals to compare original page size (scanning) and output page size [SP 8-445].	
8 306	L:Scan PGS/Size	[0~9999999/ 1]
	These SPs count by size the total number of pages scanned and stored from within the document server mode screen at the operation panel, and with the Store File button from within the Copy mode screen. Use these totals to compare original page size (scanning) and output page size [SP 8-446].	
8 30x 1	A3	
8 30x 2	A4	
8 30x 3	A5	
8 30x 4	B4	
8 30x 5	B5	
8 30x 6	DLT	
8 30x 7	LG	
8 30x 8	LT	
8 30x 9	HLT	
8 30x 10	Full Bleed	
8 30x 100	A2	Not supported for this printer.
8 30x 101	B3	Not supported for this printer.
8 30x 254	Other (Standard)	
8 30x 255	Other (Custom)	

Downloaded from www.Manualslib.com manuals search engine

8 311	T:Scan PGS/Rez	[0~9999999/ 1]
	These SPs count by resolution setting the total number of pages scanned by applications that can specify resolution settings.	
8 315	S:Scan PGS/Rez	[0~9999999/ 1]
	These SPs count by resolution setting the total number of pages scanned by applications that can specify resolution settings. **Note**: At the present time, 8 311 and 8 315 perform identical counts.	
8 31x 1	1200dpi ~	
8 31x 2	600dpi~1199dpi	
8 31x 3	400dpi~599dpi	
8 31x 4	200dpi~399dpi	
8 31x 5	~199dpi	

- Copy resolution settings are fixed so they are not counted.
- The Fax application does not allow finely-adjusted resolution settings so no count is done for the Fax application.

8 381	T:Total PrtPGS	These SPs count the number of pages printed by the customer. The counter for the application used for storing the pages increments. [0~9999999/ 1] The L: counter counts the number of pages stored from within the document server mode screen at the operation panel. Pages stored with the Store File button from within the Copy mode screen go to the C: counter.
8 382	C:Total PrtPGS	
8 384	P:Total PrtPGS	
8 385	S:Total PrtPGS	
8 386	L:Total PrtPGS	
8 387	O:Total PrtPGS	

- When the A3/DLT double count function is switched on with SP5104, 1 A3/DLT page is counted as 2.
- When several documents are merged for a print job, the number of pages stored are counted for the application that stored them.
- These counters are used primarily to calculate charges on use of the machine, so the following pages are not counted as printed pages:
  - Blank pages in a duplex printing job.
  - Blank pages inserted as document covers, chapter title sheets, and slip sheets.
  - Reports printed to confirm counts.
  - All reports done in the service mode (service summaries, engine maintenance reports, etc.)
  - Test prints for machine image adjustment.
  - Error notification reports.
  - Partially printed pages as the result of a copier jam.

Downloaded from www.Manualslib.com manuals search engine

8 391	LSize PrtPGS	[0~9999999/ 1]
	These SPs count pages printed on paper sizes A3/DLT and larger. **Note**: In addition to being displayed in the SMC Report, these counters are also displayed in the User Tools display on the copy machine.	
8 391 1	A3/DLT, Larger	
8 391 2	A2, Larger	Not supported with this printer.

8 401	T:PrtPGS/LS	These SPs count the number of pages printed from the document server. The counter for the application used to print the pages is incremented. The L: counter counts the number of jobs stored from within the document server mode screen at the operation panel. [0~9999999/ 1]
8 402	C:PrtPGS/LS	
8 404	P:PrtPGS/LS	
8 405	S:PrtPGS/LS	
8 406	L:PrtPGS/LS	

- Print jobs done with Web Image Monitor and Desk Top Binder are added to the L: count.

8 411	Prints/Duplex	This SP counts the amount of paper (front/back counted as 1 page) used for duplex printing. Last pages printed only on one side are not counted. [0~9999999/ 1]

Downloaded from www.Manualslib.com manuals search engine

8 421	T:PrtPGS/Dup Comb	[0~9999999/ 1]
	These SPs count by binding and combine, and n-Up settings the number of pages processed for printing. This is the total for all applications.	
8 422	C:PrtPGS/Dup Comb	[0~9999999/ 1]
	These SPs count by binding and combine, and n-Up settings the number of pages processed for printing by the copier application.	
8 424	P:PrtPGS/Dup Comb	[0~9999999/ 1]
	These SPs count by binding and combine, and n-Up settings the number of pages processed for printing by the printer application.	
8 425	S:PrtPGS/Dup Comb	[0~9999999/ 1]
	These SPs count by binding and combine, and n-Up settings the number of pages processed for printing by the scanner application.	
8 426	L:PrtPGS/Dup Comb	[0~9999999/ 1]
	These SPs count by binding and combine, and n-Up settings the number of pages processed for printing from within the document server mode window at the operation panel.	
8 427	O:PrtPGS/Dup Comb	[0~9999999/ 1]
	These SPs count by binding and combine, and n-Up settings the number of pages processed for printing by Other applications	
8 42x 1	Simplex> Duplex	
8 42x 2	Duplex> Duplex	
8 42x 3	Book> Duplex	
8 42x 4	Simplex Combine	
8 42x 5	Duplex Combine	
8 42x 6	2>	2 pages on 1 side (2-Up)
8 42x 7	4>	4 pages on 1 side (4-Up)
8 42x 8	6>	6 pages on 1 side (6-Up)
8 42x 9	8>	8 pages on 1 side (8-Up)
8 42x 10	9>	9 pages on 1 side (9-Up)
8 42x 11	16>	16 pages on 1 side (16-Up)
8 42x 12	Booklet	
8 42x 13	Magazine	

- These counts (SP8 421 to SP8 427) are especially useful for customers who need to improve their compliance with ISO standards for the reduction of paper consumption.
- Pages that are only partially printed with the n-Up functions are counted as 1 page.
- Here is a summary of how the counters work for Booklet and Magazine modes:

Booklet	
Original Pages	**Count**
1	1
2	2
3	2
4	2
5	3
6	4
7	4
8	4

Magazine	
Original Pages	**Count**
1	1
2	2
3	2
4	2
5	4
6	4
7	4
8	4

Downloaded from www.Manualslib.com manuals search engine

8 431	T:PrtPGS/ImgEdt	[0~9999999/ 1]
	These SPs count the total number of pages output with the three features below, regardless of which application was used.	
8 432	C:PrtPGS/ImgEdt	[0~9999999/ 1]
	These SPs count the total number of pages output with the three features below with the copy application.	
8 434	P:PrtPGS/ImgEdt	[0~9999999/ 1]
	These SPs count the total number of pages output with the three features below with the print application.	
8 436	L:PrtPGS/ImgEdt	[0~9999999/ 1]
	These SPs count the total number of pages output from within the document server mode window t the operation panel with the three features below.	
8 437	O:PrtPGS/ImgEdt	[0~9999999/ 1]
	These SPs count the total number of pages output with the three features below with Other applications.	
8 43x 1	Cover/Slip Sheet	Total number of covers or slip sheets inserted. The count for a cover printed on both sides counts 2.
8 43x 2	Series/Book	The number of pages printed in series (one side) or printed as a book with booklet right/left pagination.
8 43x 3	User Stamp	The number of pages printed where stamps were applied, including page numbering and date stamping.

Downloaded from www.Manualslib.com manuals search engine

8 441	T:PrtPGS/Ppr Size	[0~9999999/ 1]
	These SPs count by print paper size the number of pages printed by all applications.	
8 442	C:PrtPGS/Ppr Size	[0~9999999/ 1]
	These SPs count by print paper size the number of pages printed by the copy application.	
8 444	P:PrtPGS/Ppr Size	[0~9999999/ 1]
	These SPs count by print paper size the number of pages printed by the printer application.	
8 445	S:PrtPGS/Ppr Size	[0~9999999/ 1]
	These SPs count by print paper size the number of pages printed by the scanner application.	
8 446	L:PrtPGS/Ppr Size	[0~9999999/ 1]
	These SPs count by print paper size the number of pages printed from within the document server mode window at the operation panel.	
8 447	O:PrtPGS/Ppr Size	[0~9999999/ 1]
	These SPs count by print paper size the number of pages printed by Other applications.	
8 44x 1	A3	
8 44x 2	A4	
8 44x 3	A5	
8 44x 4	B4	
8 44x 5	B5	
8 44x 6	DLT	
8 44x 7	LG	
8 44x 8	LT	
8 44x 9	HLT	
8 44x 10	Full Bleed	
8 44x 100	A2	Not supported with this printer.
8 44x 101	B3	Not supported with this printer.
8 44x 254	Other (Standard)	
8 44x 255	Other (Custom)	

- These counters do not distinguish between LEF and SEF.

Downloaded from www.Manualslib.com manuals search engine

8 451	PrtPGS/Ppr Tray	[0~9999999/ 1]
	These SPs count the number of sheets fed from each paper feed station.	
8 451 1	Bypass	Bypass Tray
8 451 2	Tray 1	Copier
8 451 3	Tray 2	Copier
8 451 4	Tray 3	Paper Tray Unit (Option)
8 451 5	Tray 4	Paper Tray Unit (Option)
8 451 6	Tray 5	LCT (Option)
8 451 7	Tray 6	Currently not used.
8 451 8	Tray 7	Currently not used.
8 451 9	Tray 8	Currently not used.
8 451 10	Tray 9	Currently not used.

8 461	T:PrtPGS/Ppr Type	[0~9999999/ 1]
	These SPs count by paper type the number pages printed by all applications. • These counters are not the same as the PM counter. The PM counter is based on feed timing to accurately measure the service life of the feed rollers. However, these counts are based on output timing. • Blank sheets (covers, chapter covers, slip sheets) are also counted. • During duplex printing, pages printed on both sides count as 1, and a page printed on one side counts as 1.	
8 462	C:PrtPGS/Ppr Type	[0~9999999/ 1]
	These SPs count by paper type the number pages printed by the copy application.	
8 464	P:PrtPGS/Ppr Type	[0~9999999/ 1]
	These SPs count by paper type the number pages printed by the printer application.	
8 466	L:PrtPGS/Ppr Type	[0~9999999/ 1]
	These SPs count by paper type the number pages printed from within the document server mode window at the operation panel.	
8 46x 1	Normal	
8 46x 2	Recycled	
8 46x 3	Special	
8 46x 4	Thick	
8 46x 5	Normal (Back)	
8 46x 6	Thick (Back)	
8 46x 7	OHP	
8 46x 8	Other	

Downloaded from www.Manualslib.com manuals search engine

8 471	PrtPGS/Mag	[0~9999999/ 1]
	These SPs count by magnification rate the number of pages printed.	
8 471 1	~49%	
8 471 2	50%~99%	
8 471 3	100%	
8 471 4	101%~200%	
8 471 5	201% ~	

- Counts are done for magnification adjusted for pages, not only on the operation panel but performed remotely with an external network application capable of performing magnification adjustment as well.
- Magnification adjustments done with printer drivers with PC applications such as Excel are also counted.
- Magnification adjustments done for adjustments after they have been stored on the document server are not counted.
- Magnification adjustments performed automatically during Auto Reduce/Enlarge copying are counted.
- The magnification rates of blank cover sheets, slip sheets, etc. are automatically assigned a rate of 100%.

8 481 1	T:PrtPGS/TonSave	These SPs count the number of pages printed with the Toner Save feature switched on. **Note**: These SPs return the same results as this SP is limited to the Print application. [0~9999999/ 1]
8 484 1	P:PrtPGS/TonSave	

Downloaded from www.Manualslib.com manuals search engine

8 491	T:PrtPGS/Col Mode	[0~9999999/ 1]
	These SPs count by color mode the total number of pages output by the Copy, document server, and Fax applications.	
8 492	C:PrtPGS/Col Mode	[0~9999999/ 1]
	These SPs count by color mode the total output by the Copy application only	
8 496	L:PrtPGS/Col Mode	[0~9999999/ 1]
	These SPs count by color mode the total output from within the document server mode window at the operation panel.	
8 496 1	B/W	
8 496 2	Single Color	Color MFP/2-color MFP machines only.
8 496 3	Two Color	Color MFP/2-color MFP machines only.
8 496 4	Full Color	Color MFP machines only

Notes for SP8 491 to SP8 496

- These SPs apply to the Copy, document server, and Fax applications only. They do not apply to the Print application.
- When the ACS feature is used to select the color settings automatically, the results of the ACS execute is used to increment the appropriate counter.
- If a color stamp is selected for printing on a monochrome document, the count is for B/W.
- If the output is black and white even if color print mode was selected, the pages count as Full Color.
- The color mode selected for a document stored on the document server is counted. (The color selection cannot be changed once the document is stored on the document server.)

8 501	T:PrtPGS/Col Mode	[0~9999999/ 1]
	These SPs count by color mode the total number of pages printed.	
8 501 1	B/W	
8 501 2	Single Color	Color MFP and 2-Color MFP machines only.
8 501 3	Full Color	Color MFP and Color LP machines only.
8 504	P:PrtPGS/Col Mode	[0~9999999/ 1]
	These SPs count by color mode the number of pages printed with the Print application.	
8 504 1	B/W	
8 504 2	Single Color	Color MFP and 2-Color MFP machines only.
8 504 3	Full Color	Color MFP and Color LP machines only.

NOTE: At the present time, 8 501 and 8 504 perform identical counts, because they are both limited to the Print application.

Downloaded from www.Manualslib.com manuals search engine

8 511	T:PrtPGS/Emul	[0~9999999/ 1]
	These SPs count by printer emulation mode the total number of pages printed.	
8 514	P:PrtPGS/Emul	[0~9999999/ 1]
	These SPs count by printer emulation mode the total number of pages printed.	

8 514 1	RPCS	
8 514 2	RPDL	
8 514 3	PS3	
8 514 4	R98	
8 514 5	R16	
8 514 6	GL/GL2	
8 514 7	R55	
8 514 8	RTIFF	
8 514 9	PDF	
8 514 10	PCL5e/5c	
8 514 11	PCL XL	
8 514 12	IPDL-C	
8 514 13	BM-Links	Japan Only
8 514 14	Other	

- SP8 511 and SP8 514 return the same results as they are both limited to the Print application.
- Print jobs output to the document server are not counted.

Downloaded from www.Manualslib.com manuals search engine

8 521	T:PrtPGS/FIN	[0~9999999/ 1]
	These SPs count by finishing mode the total number of pages printed by all applications.	
8 522	C:PrtPGS/FIN	[0~9999999/ 1]
	These SPs count by finishing mode the total number of pages printed by the Copy application.	
8 524	P:PrtPGS/FIN	[0~9999999/ 1]
	These SPs count by finishing mode the total number of pages printed by the Print application.	
8 525	S:PrtPGS/FIN	[0~9999999/ 1]
	These SPs count by finishing mode the total number of pages printed by the Scanner application.	
8 526	L:PrtPGS/FIN	[0~9999999/ 1]
	These SPs count by finishing mode the total number of pages printed from within the document server mode window at the operation panel.	
8 52x 1	Sort	
8 52x 2	Stack	
8 52x 3	Staple	
8 52x 4	Booklet	
8 52x 5	Z-Fold	
8 52x 6	Punch	
8 52x 7	Other	

Note:

- If stapling is selected for finishing and the stack is too large for stapling, the unstapled pages are still counted.
- The counts for staple finishing are based on output to the staple tray, so jam recoveries are counted.

8 531 1	Staples	This SP counts the amount of staples used by the machine. [0~9999999/ 1]

Downloaded from www.Manualslib.com manuals search engine

8 581	T:Counter		[0~9999999/ 1]	
	These SPs count the total output broken down by color output, regardless of the application used. In addition to being displayed in the SMC Report, these counters are also displayed in the User Tools display on the copy machine. **Note:** These SPs are supported by color MFP and LP (Laser Printer: Not use) machines only.			
		MFP Color	LP Color	**Replaced:**
8 581 1	Total	Yes	Yes	SP7003 001
8 581 2	Total: Full Color	Yes	Yes	SP7003 020
8 581 3	B&W/Single Color	Yes	Yes	SP7003 021
8 581 4	Development: CMY	Yes	Yes	SP7003 010
8 581 5	Development: K	Yes	Yes	SP7003 011
8 581 6	Copy: Color	Yes	No	SP7003 026
8 581 7	Copy: B/W	Yes	No	SP7003 027
8 581 8	Print: Color	Yes	Yes	SP7003 028
8 581 9	Print: B/W	Yes	Yes	SP7003 029
8 581 10	Total: Color	Yes	Yes	SP7003 030
8 581 11	Total: B/W	Yes	Yes	SP7003 023

8 582	C:Counter		[0~9999999/ 1]
	These SPs count the total output broken down by color output for the Copy application only. **Note:** These SPs are supported by color copy MFP machines only. These counters are displayed in the SMC Report, and in the User Tools display on the copy machine.		
		MFP Color	**Replaced:**
8 582 1	B/W	Yes	SP7003 2
8 582 2	Single Color	Yes	SP7003 12
8 582 003	Two Color	Yes	SP7003 13
8 582 4	Full Color	Yes	SP7003 4

8 584	P:Counter		[0~9999999/ 1]	
	These SPs count the total output broken down by color output for the Print application only. These counters are displayed in the SMC Report, and in the User Tools display on the copy machine. **Note:** These SPs are supported by color MFP and LP (Laser Printer: Not use) machines only.			
		MFP Color	LP Color	**Replaced:**
8 584 1	B/W	Yes	Yes	SP7003 7
8 584 2	Single Color	Yes	Yes	---
8 584 3	Full Color	Yes	Yes	SP7003 8

Downloaded from www.Manualslib.com manuals search engine

8 586	L:Counter		[0~9999999/ 1]
	These SPs count the total output broken down by color for output from within the document server mode window at the operation panel.These counters are displayed in the SMC Report, and in the User Tools display on the copy machine. **Note:** These SPs are supported only by color copy MFP machines only with the fax application installed.		
		MFP Color	**Replaced:**
8 586 1	B/W	Yes	---
8 586 2	Single Color	Yes	---
8 586 3	Two Color	Yes	---
8 586 4	Single Color	Yes	---

8 591	O:Counter	[0~9999999/ 1]
	These SPs count the totals for A3/DLT paper use, number of duplex pages printed, and the number of staples used. These totals are for Other (O:) applications only.	
8 591 1	A3/DLT	
8 591 2	Duplex	
8 591 3	Staple	

8 651	T:S-to-Email PGS	[0~9999999/ 1]
	These SPs count by color mode the total number of pages attached to an e-mail for both the Scan and document server applications.	
8 651 1	B/W	
8 651 2	Color	Supported by Color MFP machines only.
8 655	S:S-to-Email PGS	[0~9999999/ 1]
	These SPs count by color mode the total number of pages attached to an e-mail for the Scan application only.	
8 655 1	B/W	
8 655 2	Color	Supported by Color MFP machines only.

Notes

- The count for B/W and Color pages is done after the document is stored on the HDD. If the job is cancelled before it is stored, the pages are not counted.
- If Scan-to-Email is used to send a 10-page document to 5 addresses, the count is 10 (the pages are sent to the same SMTP server together).
- If Scan-to-PC is used to send a 10-page document to 5 folders, the count is 50 (the document is sent to each destination of the SMB/FTP server).
- Due to restrictions on some devices, if Scan-to-Email is used to send a 10-page document to a large number of destinations, the count may be divided and counted separately. For example, if a 10-page document is sent to 200 addresses, the count is 10 for the first 100 destinations and the count is also 10 for the second 100 destinations, for a total of 20.).

Downloaded from www.Manualslib.com manuals search engine

8 661	T:Deliv PGS/Svr	[0~9999999/ 1]
	These SPs count by color mode the total number of pages sent to a Scan Router server by both Scan and LS applications.	
8 661 1	B/W	
8 661 2	Color	Supported by Color MFP machines only.
8 665	S:Deliv PGS/Svr	[0~9999999/ 1]
	These SPs count by color mode the total number of pages sent to a Scan Router server by the Scan application.	
8 665 1	B/W	
8 665 2	Color	Supported by Color MFP machines only.
8 666	L:Deliv PGS/Svr	[0~9999999/ 1]
	These SPs count by color mode the total number of pages sent to a Scan Router server by LS applications.	
8 666 1	B/W	
8 666 2	Color	Supported by Color MFP machines only.

Notes

- The B/W and Color counts are done after the document is stored on the HDD of the Scan Router server.
- If the job is canceled before storage on the Scan Router server finishes, the counts are not done.
- The count is executed even if regardless of confirmation of the arrival at the Scan Router server.

8 671	T:Deliv PGS/PC	[0~9999999/ 1]
	These SPs count by color mode the total number of pages sent to a folder on a PC (Scan-to-PC) with the Scan and LS applications.	
8 671 1	B/W	
8 671 2	Color	Supported by Color MFP machines only.
8 675	S:Deliv PGS/PC	[0~9999999/ 1]
	These SPs count by color mode the total number of pages sent with Scan-to-PC with the Scan application.	
8 675 1	B/W	
8 675 2	Color	Supported by Color MFP machines only.

Downloaded from www.Manualslib.com manuals search engine

8 691	T:TX PGS/LS	These SPs count the number of pages sent from the document server. The counter for the application that was used to store the pages is incremented. [0~9999999/ 1] The L: counter counts the number of pages stored from within the document server mode screen at the operation panel. Pages stored with the Store File button from within the Copy mode screen go to the C: counter.
8 692	C:TX PGS/LS	
8 694	P:TX PGS/LS	
8 695	S:TX PGS/LS	
8 696	L:TX PGS/LS	

Notes

- Print jobs done with Web Image Monitor and Desk Top Binder are added to the count.
- If several documents are merged for sending, the number of pages stored are counted for the application that stored them.

8 701	TX PGS/Port	[0~9999999/ 1]
	These SPs count the number of pages sent by the physical port used to send them. For example, if a 3-page original is sent to 4 destinations via ISDN G4, the count for ISDN (G3, G4) is 12.	
8 701 1	PSTN-1	
8 701 2	PSTN-2	
8 701 3	PSTN-3	
8 701 4	ISDN (G3,G4)	
8 701 5	Network	

8 711	T:Scan PGS/Comp	[0~9999999/ 1]
	These SPs count the number of compressed pages scanned into the document server, counted by the formats slisted below.	
8 711 1	JPEG/JPEG2000	
8 711 2	TIFF (Multi/Single)	
8 711 3	PDF	
8 711 4	Other	

8 715	S:Scan PGS/Comp	[0~9999999/ 1]
	These SPs count the number of compressed pages scanned by the scan application, counted by the formats slisted below.	
8 715 1	JPEG/JPEG2000	
8 715 2	TIFF (Multi/Single)	
8 715 3	PDF	
8 715 4	Other	

Downloaded from www.Manualslib.com manuals search engine

8 741	RX PGS/Port	[0~9999999/ 1]
	These SPs count the number of pages received by the physical port used to receive them.	
8 741 1	PSTN-1	
8 741 2	PSTN-2	
8 741 3	PSTN-3	
8 741 4	ISDN (G3,G4)	
8 741 5	Network	

8 771	Dev Counter	[0~9999999/ 1]
	These SPs count the frequency of use (number of rotations of the development rollers) for black and other color toners. **Note** For machines that do not support color, the Black toner count is the same as the Total count.	
8 771 1	Total	All toners (YMCK)
8 771 2	K	Black toner
8 771 3	Y	Yellow toner
8 771 4	M	Magenta toner
8 771 5	C	Cyan toner
8 771 6	R	Red toner **(Not Used)**

8 781	Toner Use Count: Color	[0~65 535]
	These SPs count the frequency of use (number of rotations of the development rollers) for black and other color toners.	
8 781 1	K	Black toner
8 781 2	M	Magenta toner
8 781 3	C	Cyan toner
8 781 4	Y	Yellow toner

8 791 1	LS Memory Remain	This SP displays the percent of space available on the document server for storing documents. [0~100/ 1]

8 801	Toner Remain		[0~100/ 1]
	This SP displays the percent of toner remaining for each color. This SP allows the user to check the toner supply at any time. **Note:** This precise method of measuring remaining toner supply (1% steps) is better than other machines in the market that can only measure in increments of 10 (10% steps).		
8 801 1	K	Black.	Supported by B/W and Color machine.
8 801 2	Y	Yellow	Color machines only.
8 801 3	M	Magenta	
8 801 4	C	Cyan	
8 801 5	R	Red	**(Not Used)**

Downloaded from www.Manualslib.com manuals search engine

8831	Pixel Cover Ave.	Average Pixel Coverage
001	Accum. Ave. K	
002	Accum. Ave. M	
003	Accum. Ave. C	
004	Accum. Ave. Y	

8841	Pixel Cover Last	Average Pixel Coverage
001	Last Page K	
002	Last Page M	
003	Last Page C	
004	Last Page Y	

8 851	Toner Coverage 0-10%	[0~65 535]
	These SPs count the percentage of dot coverage for black other color toners.	
8 851 1	K	Black toner
8 851 2	M	Magenta toner
8 851 3	C	Cyan toner
8 851 4	Y	Yellow toner

8 861	Toner Coverage 11-20%	[0~65 535]
	These SPs count the percentage of dot coverage for black other color toners.	
8 861 1	K	Black toner
8 861 2	M	Magenta toner
8 861 3	C	Cyan toner
8 861 4	Y	Yellow toner

8 871	Toner Coverage 21-30%	[0~65 535]
	These SPs count the percentage of dot coverage for black other color toners.	
8 871 1	K	Black toner
8 871 2	M	Magenta toner
8 871 3	C	Cyan toner
8 871 4	Y	Yellow toner

8 881	Toner Coverage 31 -%	[0~65 535]
	These SPs count the percentage of dot coverage for black other color toners.	
8 881 1	K	Black toner
8 881 2	M	Magenta toner
8 881 3	C	Cyan toner
8 881 4	Y	Yellow toner

Downloaded from www.Manualslib.com manuals search engine

8 891	Pages: Current Toner		[0~65 535]
	These SPs count the number of pages for the current set toner.		
8 891 1	K	Black toner	
8 891 2	M	Magenta toner	
8 891 3	C	Cyan toner	
8 891 4	Y	Yellow toner	

8 941	Machine Status		[0~9999999/ 1]
	These SPs count the amount of time the machine spends in each operation mode. These SPs are useful for customers who need to investigate machine operation for improvement in their compliance with ISO Standards.		
8 941 1	Operation Time	Engine operation time. Does not include time while controller is saving data to HDD (while engine is not operating).	
8 941 2	Standby Time	Engine not operating. Includes time while controller saves data to HDD. Does not include time spent in Energy Save, Low Power, or Off modes.	
8 941 3	Energy Save Time	Includes time while the machine is performing background printing.	
8 941 4	Low Power Time	Includes time in Energy Save mode with Engine on. Includes time while machine is performing background printing.	
8 941 5	Off Mode Time	Includes time while machine is performing background printing. Does not include time machine remains powered off with the power switches.	
8 941 6	Down Time/SC	Total down time due to SC errors.	
8 941 7	Down Time/PrtJam	Total down time due to paper jams during printing.	
8 941 8	Down Time/OrgJam	Total down time due to original jams during scanning.	
8 941 9	Down Time/TonEnd	Total down time due to toner end.	

Downloaded from www.Manualslib.com manuals search engine

8 951	AddBook Register		
	These SPs count the number of events when the machine manages data registration.		
8 951 1	User Code	User code registrations.	[0~9999999/ 1]
8 951 2	Mail Address	Mail address registrations.	
8 951 3	Fax Destination	Fax destination registrations.	
8 951 4	Group	Group destination registrations.	
8 951 5	Transfer Request	Fax relay destination registrations for relay TX.	
8 951 6	F-Code	F-Code box registrations.	
8 951 7	Copy Program	Copy application registrations with the Program (job settings) feature.	[0~255 / 255]
8 951 8	Fax Program	Fax application registrations with the Program (job settings) feature.	
8 951 9	Printer Program	Printer application registrations with the Program (job settings) feature.	
8 951 10	Scanner Program	Scanner application registrations with the Program (job settings) feature.	

Downloaded from www.Manualslib.com manuals search engine

Group 9000

9405	System Stop Ctrl Setting	Setting of the System Stop Control Function.
001	System Stop Control ON/OFF	Switches the System Stop Control Function ON or OFF. When this switch is ON: The machine stops the job when the output of the temperature/humidity sensor on the K-PCU is 41°C (105.8F) or higher. **Note:** This keeps the temperature of the toner in the development unit below 50°C (122F), which prevents toner clumping and other machine failures. [0 - 1/ 1] 0: OFF , 1: ON (default)
002	System Stop History	Displays whether or not System Stop Control has ever stopped the machine in the middle of the job. 0 (default): System Stop Control has never stopped the machine. 1: System Stop Control has stopped the machine one or more times.

Downloaded from www.Manualslib.com manuals search engine

9407	Environ Cntrl	
001	Environ Cntrl	Enable/disables the Peltier unit. [0 to 1 / 1] **0: Disabled** 1: Enabled
004	Op Humidity	**Factory Use Only. Do Not Touch in the field.**
005	Stop Humidity	**Factory Use Only. Do Not Touch in the field.**
006	Op On Time	**Factory Use Only. Do Not Touch in the field.**
007	Op Off Time	**Factory Use Only. Do Not Touch in the field.**

IMPOTANT:

- As a general rule, keep this SP mode **disabled.**
  Enable this SP mode **ONLY WHEN:**
  1. The temperature in the room is low, **and**
  2. There is condensation on the drum or charge roller, **and**
  3. The images on the printouts are blurry

- To enable the Peltier unit:
  1. Set this SP mode to a value of **1**, and
  2. Turn **OFF** the AOF function in User Program Mode.

  NOTE: There are some environmental conditions that the Peltier unit needs to operate (ex: humidity of 60% or higher). If the Peltier unit does not operate after you do the above steps, it is because these conditions are not satisfied.

- When the AOF function is turned OFF, the machine is not in compliance with the Energy Star requirements.

Downloaded from www.Manualslib.com manuals search engine

5.5.3 PRINTER SERVICE TABLE

Group 1 (Printer)

1001	Bit Switch	
001	Bit Switch 1 Settings	Adjusts the bit switch settings. **DFU**
002	Bit Switch 2 Settings	
003	Bit Switch 3 Settings	
004	Bit Switch 4 Settings	
005	Bit Switch 5 Settings	
006	Bit Switch 6 Settings	
007	Bit Switch 7 Settings	
008	Bit Switch 8 Settings	

1003	Clear Setting	
001	Initialize Printer System	
	Initializes settings in the “System” menu of the user mode.	
003	Delete Program	

1004	Print Summary
	Print Summary Prints the service summary sheet (a summary of all the controller settings).

1005	Disp. Version	Display Version
	Displays the version of the controller firmware.	

1006	Sample/Locked Print
	Enables and disables the document server. When you select “0,” the document server is enabled or disabled in accordance with Copy Service Mode SP5-967. When you select “1,” the document server is enabled regardless of Copy Service Mode SP5-967. 0: Link With Doc. Svr. 1: Enable

1101	Data Recall	
	Recalls a set of gamma settings.	
001	Factory	This can be either a) the factory setting, b) the previous setting, or c) the current setting.
002	Previous	
003	Current	
004	ACC	

1102	Resolution Setting		
	Selects the printing mode (resolution) for the printer gamma adjustment.		
	Press a key on the display:	[2400 x 600 Photo]	[1800 x 600 Photo]
		[600 x 600 Photo]	[2400 x 600 Photo]
		[1800 x 600 Text]	[600 x 600]

Downloaded from www.Manualslib.com manuals search engine

1103	Test Page
	Prints the test page to check the color balance before and after the gamma adjustment.
001	Color Gray Scale
002	Color Pattern

1104	Gamma Adjustment	
	Adjusts the printer gamma for the mode selected in the “Mode Selection” menu.	
001	Black: Highlight	[0 to 30 / 15 / 1/step]
002	Black: Shadow	
003	Black: Middle	
004	Black: ID max	
021	Cyan: Highlight	
022	Cyan: Shadow	
023	Cyan: Middle	
024	Cyan: ID max	
041	Magenta: Highlight	
042	Magenta: Shadow	
043	Magenta: Middle	
044	Magenta: ID max	
061	Yellow: Highlight	
062	Yellow: Shadow	
063	Yellow: Middle	
064	Yellow: ID max	

1105	Save Tone Control Value
	Stores the print gamma adjusted with the “Gamma Adj.” menu item as the current setting. Before the machine stores the new “current setting", it moves the data currently stored as the “current setting” to the “previous setting” memory storage location.

1106	Toner Limit	
	Adjusts the maximum toner amount for image development.	
001	Toner Limit: Photo	[100 to 400 / 260 / 1 %/step]
002	Toner Limit: Text	[100 to 400 / 190 / 1 %/step]

Downloaded from www.Manualslib.com manuals search engine

5.5.4 SCANNER SERVICE TABLE

Group 1 (Scanner)

1004	**Compression Type**
	Selects the compression type for binary picture processing. [1 to 3 /1/step] 1: MH, 2: MR, 3: MMR

1005	**Erase margin**
	Creates an erase margin for all edges of the scanned image. If the machine has scanned the edge of the original, create a margin. [0 to 5/ 1 mm/step]

1007	**Store Priority**
	This program specifies how scanned data is processed as default. [1: Send / 2: Store Only / 3: Send & Store]

1009	**Remote Scan Disable**
	This SP enables and disables remote scanning. 0:Enable 1:Diable

Group 2 (Scanner)

2021	**Compression Ratio of Gray Scale**	
	This SP sets the compression ratio of grayscale images.	
001	Normal Image	
002	High Comp Image	
003	Low Comp Image	
004	High Lvl2 Comp Image	
005	Low Lvl2 Comp Image	

Downloaded from www.Manualslib.com manuals search engine

5.6 COPIER INPUT/OUTPUT CHECK

5.6.1 COPIER INPUT CHECK: SP5803

This procedure allows you to test sensors and other components of the machine. After you select one of the categories below by number, you will see a small 8-bit table with the number of the bit and its current setting (0 or 1). The bits are numbered 0 to 7, reading right to left.

1. Enter the SP mode and select SP5803.
2. Enter the number (1 to 13) for the item that you want to check. A small box will be displayed on the SP mode screen with a series of 0's and 1's.
   The meaning of the display is as follows.

Bit	7 6 5 4 3 2 1 0
Setting	**1 1 0 0 1 0 1 0**

3. Check the status of each item against the corresponding bit numbers listed in the table below.

001 Tray 1

Bit	Input	0	1
Bit 7	Rear Side Fence Closed Sensor – Tray 1	Off	On
Bit 6	Rear Side Fence Open Sensor – Tray 1	Off	On
Bit 5	Front Side Fence Closed Sensor – Tray 1	Off	On
Bit 4	Front Side Fence Open Sensor – Tray 1	Off	On
Bit 3	Paper Near End Sensor – Tray 1	Off	On
Bit 2	Paper Height Sensor 1 – Tray 1	See following table.	
Bit 1	Paper Height Sensor 2 – Tray 1		
Bit 0	Paper Height Sensor 3 – Tray 1		

Tandem Tray Paper Height Sensors: 001

	100%		50%		30%		10%	
Near End	0	0	0	0	0	0	1	1
Paper Height 1	0	0	0	0	1	1	1	0
Paper Height 2	0	0	1	1	1	0	0	0
Paper Height 3	0	1	1	0	0	0	0	0

002 Paper Feed 1

Bit	Input	0	1
Bit 7	Paper Size – Tray 2	See following table.	
Bit 6	Paper Size – Tray 2		
Bit 5	Paper Size – Tray 2		
Bit 4	Paper Size – Tray 2		
Bit 3	Paper Size – Tray 2		
Bit 2			
Bit 1			
Bit 0			

Downloaded from www.Manualslib.com manuals search engine

003 Paper Feed 3

Bit	Input	0	1
Bit 7	Paper Size – Tray 3	See following table.	
Bit 6	Paper Size – Tray 3		
Bit 5	Paper Size – Tray 3		
Bit 4	Paper Size – Tray 3		
Bit 3	Paper Size – Tray 3		
Bit 2			
Bit 1			
Bit 0			

Paper Size Table: 002, 003

Size	Bit 7	Bit 6	Bit 5	Bit 4	Bit 3
12"x18"	1	1	1	1	1
A3	1	1	0	0	1
B4	1	0	0	1	1
A4 SEF	0	1	0	0	1
A4 LEF	1	1	0	0	0
B5 SEF	1	0	1	0	1
B5 LEF	0	0	0	1	1
A5 SEF	1	1	1	0	1
A5 LEF	0	1	1	0	1
DLT (11"x17")	1	1	1	0	0
LG (8½x14")	1	0	1	1	0
LT SEF (8½x11")	1	1	0	1	0
LT LEF	0	1	1	0	0
HLT SEF	0	1	1	1	0
HLT LEF	1	1	1	1	0
F4 (8 ½" x 13")	1	1	0	1	1
Folio (8¼ x 13")	0	1	0	1	1
F (8" x 13")	0	1	1	1	1
Executive SEF (7¼"x10½")	1	0	1	0	0
Executive LEF	0	0	1	1	1
8K SEF	0	0	1	1	0
16 SEF	1	0	0	1	0
16 LEF	1	0	1	1	1

004 Paper Feed 4

Bit	Input	0	1
Bit 7			
Bit 6			
Bit 5	Paper Height Sensor – Tray 2	See following table.	
Bit 4	Paper Height Sensor – Tray 3		
Bit 3			
Bit 2			
Bit 1	Paper Near End Sensor – Tray 2	See following table.	
Bit 0	Paper Near End Sensor – Tray 3		

Paper Height, Near End: 004

	100%	50%	30%	10%
Paper Height	0	1	1	0
Near End	0	0	1	1

Downloaded from www.Manualslib.com manuals search engine

005: Paper Feed 5

Bit	Input	0	1
Bit 7			
Bit 6			
Bit 5			
Bit 4			
Bit 3			
Bit 2	Right Tray Paper Sensor – Tray 1	No Paper	Paper
Bit 1	Number of Trays Detected	3-Trays	4-Trays
Bit 0			

006: Paper Feed 6

Bit	Input	0	1
Bit 7	Tray 1 Set Sensor	Off	On
Bit 6	Rear Fence HP Sensor – Right	Off	On
Bit 5	Right Tray Down Sensor	Off	On
Bit 4	Rear Fence HP Sensor – Tray 1	Off	On
Bit 3	Rear Fence Open Senor – Right	Off	On
Bit 2	Rear Fence Return Sensor – Tray 1	Off	On
Bit 1	Paper End Sensor – Right Tray	Off	On
Bit 0	Right Tray Set Sensor – Tray 1	Off	On

007: Paper Feed 7

Bit	Input	0	1
Bit 7	Paper Feed Sensor – Tray 1	On	Off
Bit 6			
Bit 5	Paper Feed Sensor – Tray 2	On	Off
Bit 4	Paper Feed Sensor – Tray 3	On	Off
Bit 3	Vertical Transport Sensor – Tray 1	On	Off
Bit 2			
Bit 1	Vertical Transport Sensor – Tray 2	On	Off
Bit 0	Vertical Transport Sensor – Tray 3	On	Off

On = Paper present
Off = No paper

008: Paper Feed 8

Bit	Input	0	1
Bit 7	Lift Sensor – Tray 1	On	Off
Bit 6			
Bit 5	Lift Sensor – Tray 2	On	Off
Bit 4	Lift Sensor – Tray 3	On	Off
Bit 3	Paper End Sensor – Tray 1	On	Off
Bit 2			
Bit 1	Paper End Sensor – Tray 2	On	Off
Bit 0	Paper End Sensor – Tray 3	On	Off

On: Tray up, No paper
Off: Tray down, paper present

Downloaded from www.Manualslib.com manuals search engine

009: Used Toner Trans

Bit	Input	0	1
Bit 7			
Bit 6	WasteToner Lock Sensor	Off	On
Bit 5	Waste Toner Bottle Full Sensor	Off	On
Bit 4	Waste Toner Bottle Set Sensor	Off	On
Bit 3	Waste Toner Bottle Near Full Sensor	Off	On
Bit 2			
Bit 1			
Bit 0			

010: Paper Trans 1

Bit	Input	0	1
Bit 7	Duplex Transport Sensor 1	Off	On
Bit 6	Duplex Transport Sensor 2	Off	On
Bit 5	Duplex Transport Sensor 3	Off	On
Bit 4	Duplex Inverter Sensor	Off	On
Bit 3	Duplex Entrance Sensor	Off	On
Bit 2			
Bit 1			
Bit 0			

011: Paper Trans 2

Bit	Input	0	1
Bit 7	LCT Relay Sensor	Off	On
Bit 6	Paper Exit Relay Sensor	Off	On
Bit 5	Registration Sensor	Off	On
Bit 4	Guide Plate Position Sensor	Off	On
Bit 3			
Bit 2	Paper Exit Sensor	Off	On
Bit 1	Paper Exit Relay Sensor	Off	On
Bit 0		Off	On

012: Paper Trans 3

Bit	Input	0	1
Bit 7	Copy Tray Full Sensor	Off	On
Bit 6	Double-Feed Detection Sensor	Off	On
Bit 5	Accordion Jam Sensor	Off	On
Bit 4	Fusing Exit Sensor	Off	On
Bit 3			
Bit 2			
Bit 1			
Bit 0			

Downloaded from www.Manualslib.com manuals search engine

013: Paper Trans 4

Bit	Input	0	1
Bit 7	Paper Size Switch 1	See following table.	
Bit 6	Paper Size Switch 2		
Bit 5	Paper Size Switch 3		
Bit 4	Paper Size Switch 4		
Bit 3	Bypass Paper Size Switch	Off	On
Bit 2			
Bit 1			
Bit 0			

Bypass paper end sensor: Off: Paper present, On: No paper

Paper Size Table: 013 (Trays 1 to 3, Bit 7 to 4)

NA	EU/Asia	Tray Sensor SW				
		1	2	3	4	5
Postcard (100 x 148 mm)	Postcard (100 x 148 mm)	L	H	H	H	H
5 ½ x 8 ½ SEF	A5 SEF	L	H	H	H	L
5 ½ x 8 ½ SEF	A5 SEF	L	H	H	H	L
8 ½ x 14 SEF	8 x 13 SEF	L	H	H	L	H
8 ½ x 14 SEF	A4 SEF	L	H	L	L	H
8 ½ x 14 SEF	A3 SEF	L	H	L	L	H
11 x 17 SEF	A3 SEF	L	L	L	H	H
A3 SEF	A3 SEF	L	L	H	H	H

Paper Size Table: 013 (Bypass Tray Bit 3)

NA	EU/Asia	Tray Sensor SW				
		1	2	3	4	5
Postcard (100 x 148 mm)	Postcard (100 x 148 mm)	L	H	H	H	H
5 ½ x 8 ½ SEF	A5 SEF	L	H	H	H	L
5 ½ x 8 ½ SEF	A5 SEF	L	H	H	H	L
8 ½ x 14 SEF	8 x 13 SEF	L	H	H	L	H
8 ½ x 14 SEF	A5 LEF	L	H	L	L	H
8 ½ x 14 SEF	A4 LEF	L	H	L	L	H
11 x 8 ½ SEF	A4 LEF	L	L	L	H	H
A4 LEF	A4 LEF	L	L	H	H	H

014: Drum Mtr Lock

Bit	Input	0	1
Bit 7	Drum Motor Lock – Y	Off	On
Bit 6	Drum Motor Lock – M	Off	On
Bit 5	Drum Motor Lock – C	Off	On
Bit 4	Drum Motor Lock – K	Off	On
Bit 3			
Bit 2			
Bit 1			
Bit 0			

Off: No Lock
On: Locked

Downloaded from www.Manualslib.com manuals search engine

015: PCU Motor Lock

Bit	Input	0	1
Bit 7	PCU Motor Lock – Y	Off	On
Bit 6	PCU Motor Lock – M	Off	On
Bit 5	PCU Motor Lock – C	Off	On
Bit 4	PCU Motor Lock – K	Off	On
Bit 3			
Bit 2			
Bit 1			
Bit 0			

Off: No Lock
On: Locked

016: Other Motor Lock

Bit	Input	0	1
Bit 7	ITB Drive Motor Lock	Off	On
Bit 6	PTR Motor Lock	Off	On
Bit 5	Fusing/Exit Motor Lock	Off	On
Bit 4	Waste Toner Transport Motor Lock	Off	On
Bit 3	Waste Toner Distribution Motor Lock	Off	On
Bit 2			
Bit 1			
Bit 0			

Off: No Lock
On: Locked

017: Fan System 1

Bit	Input	0	1
Bit 7	Paper Exit Fan Motor Lock	Off	On
Bit 6	Duplex Fan Motor – Front Lock	Off	On
Bit 5	Duplex Fan Motor – Rear Lock	Off	On
Bit 4			
Bit 3			
Bit 2			
Bit 1			
Bit 0			

Off: No Lock
On: Locked

018: Fan System 2

Bit	Input	0	1
Bit 7	Fusing Cooling Fan Motor Lock	Off	On
Bit 6	Fusing Exhaust Fan Motor Lock	Off	On
Bit 5	Fusing Fan Motor Lock	Off	On
Bit 4	Peltier Cooling Fan Motor Lock	Off	On
Bit 3			
Bit 2			
Bit 1			
Bit 0			

Off: No Lock
On: Locked

Downloaded from www.Manualslib.com manuals search engine

019: Fan System 3

Bit	Input	0	1
Bit 7	Controlling Box Cooling Fan Motor 2 Lock	Off	On
Bit 6	Controlling Box Cooling Fan Motor 1 Lock	Off	On
Bit 5			
Bit 4			
Bit 3			
Bit 2			
Bit 1			
Bit 0			

Off: No Lock
On: Locked

020: Hi Volt SC1 (Drum Charge Power Pack)

Bit	Input	0	1
Bit 7	High Voltage Output: Y	Normal	Abnormal
Bit 6	High Voltage Output: M	Normal	Abnormal
Bit 5	High Voltage Output: C	Normal	Abnormal
Bit 4	High Voltage Output: K	Normal	Abnormal
Bit 3			
Bit 2			
Bit 1			
Bit 0			

021: Hi Volt SC2 (Development Bias Power Pack)

Bit	Input	0	1
Bit 7	High Voltage Output: Y	Normal	Abnormal
Bit 6	High Voltage Output: M	Normal	Abnormal
Bit 5	High Voltage Output: C	Normal	Abnormal
Bit 4	High Voltage Output: K	Normal	Abnormal
Bit 3			
Bit 2			
Bit 1			
Bit 0			

022: Hi Volt SC3 (Transfer Power Pack, Separation Power Pack)

Bit	Input		0	1
Bit 7	High Voltage Output: Y	Transfer PP	Normal	Abnormal
Bit 6	High Voltage Output: M		Normal	Abnormal
Bit 5	High Voltage Output: C		Normal	Abnormal
Bit 4	High Voltage Output: K		Normal	Abnormal
Bit 3	High Voltage Output: Y		Normal	Abnormal
Bit 2	Paper Separation	Separation PP	Normal	Abnormal
Bit 1				
Bit 0				

Downloaded from www.Manualslib.com manuals search engine

023: Paper Transfer

Bit	Input	0	1
Bit 7	ITB Lift Sensor	Separated	Contact
Bit 6			
Bit 5			
Bit 4			
Bit 3			
Bit 2			
Bit 1	ITB Position Sensor 1	See folloeing table.	
Bit 0	ITB Position Sensor 2		

Bit Table: 023

Bit 1/Bit 0	Function
00	Belt Scale Control
01	Encoder Control
10	Belt or Sensor Defective
11	Belt or Sensor Defective

024: Toner Supply

Bit	Input	0	1
Bit 7	Toner End Sensor: Y	Off	On
Bit 6	Toner End Sensor: M	Off	On
Bit 5	Toner End Sensor: C	Off	On
Bit 4	Toner End Sensor: K	Off	On
Bit 3			
Bit 2			
Bit 1			
Bit 0			

Off: Toner
On: Toner End

025: Fusing Temp Detect

Bit	Input	0	1
Bit 7	Pressure Roller Thermostat – High Temp	Off	On
Bit 6	Hot Roller Thermistor – High Temp	Off	On
Bit 5	Heating Roller Temperataure Sensor – High Temp	Off	On
Bit 4			
Bit 3			
Bit 2			
Bit 1			
Bit 0			

Off: Temperature within normal range
On: Temperature high, exceeded normal range

Downloaded from www.Manualslib.com manuals search engine

026: Set Detection

Bit	Input	0	1
Bit 7	Key Card Set	Off	On
Bit 6	Key Count Set	Off	On
Bit 5	Mechanical Counter B Set	Off	On
Bit 4	Mechanical Counter FC Set	Off	On
Bit 3	Fusing Unit Set	Off	On
Bit 2	Duplex Unit Set	Off	On
Bit 1	Drawer Set	Off	On
Bit 0			

027: Door

Bit	Input	0	1
Bit 7	Front Door Switches	Off	On
Bit 6			
Bit 5			
Bit 4			
Bit 3			
Bit 2			
Bit 1			
Bit 0			

028: Peltier Unit

Bit	Input	0	1
Bit 7	Peltier Unit Abnormal	Off	On
Bit 6	Peltier Unit Fan Motor	Off	On
Bit 5			
Bit 4			
Bit 3			
Bit 2			
Bit 1			
Bit 0			

201: DIP Switches

Bit	Input	0	1
Bit 7	DIP-SW7	Off	On
Bit 6	DIP-SW6	Off	On
Bit 5	DIP-SW5	Off	On
Bit 4	DIP-SW4	Off	On
Bit 3	DIP-SW3	Off	On
Bit 2	DIP-SW2	Off	On
Bit 1	DIP-SW1	Off	On
Bit 0	DIP-SW0	Off	On

Downloaded from www.Manualslib.com manuals search engine

5.6.2 COPIER OUTPUT CHECK: SP5804

1. Open SP mode 5804.
2. Select the SP number that corresponds to the component you wish to check. (Refer to the table on the next page.)
3. Press On then press Off to test the selected item.
   NOTE: You cannot exit and close this display until you press off to switch off the output check currently executing. Do not keep an electrical component switched on for a long time.

5804	Output Chk		Output Check		
001	Fuse Fan: Front NS	M14	045	Hopper Mtr Fwd	M51
002	Fuse Fan: Front HS	M14	046	P.Pump Drv CL:Y	MC6
003	Fuse Fan: Back NS	M15	047	P.Pump Drv CL:M	MC2
004	Fuse Fan: Back HS	M15	048	P.Pump Drv CL:C	MC8
005	Opt. Fan: Front NS	M35	049	P.Pump Drv CL:K	MC4
006	Opt. Fan: Front HS	M35	050	Used Toner Mtr 1	M23
007	Opt. Fan: Back NS	M34	051	Used Toner Mtr 1	M23
008	Opt. Fan: Back HS	M34	052	Chage dc:Y	PCB7
009	Exit Pipe Fan	M25	053	Chage dc:M	PCB7
010	Sub Fuse Fan: NS	M13	054	Chage dc:C	PCB7
011	Sub Fuse Fan: HS	M13	055	Chage dc:K	PCB7
012	PT Fan: NS	M24	056	Chage ac:Y	PCB7
014	Dupx Fan: NS	M20	057	Chage ac:M	PCB7
015	Dupx Fan:Front:NS	M29	058	Chage ac:C	PCB7
016	Dupx Fan:Front:HS	M29	059	Chage ac:K	PCB7
017	Dupx Fan:Back:NS	M30	060	Dev dc:Y	PCB6
018	Dupx Fan:Back:HS	M30	061	Dev dc:M	PCB6
019	Exit Fan:NS	M28	062	Dev dc:C	PCB6
021	PCB Box Fan1:NS	M41	063	Dev dc:K	PCB6
023	PCB Box Fan2:NS	M42	064	Dev ac:Y	PCB6
025	PSU Fan 1:NS	---	065	Dev ac:M	PCB6
026	PSU Fan 1:HS	---	066	Dev ac:C	PCB6
027	PSU Fan 2:NS	---	067	Dev ac:K	PCB6
028	PSU Fan 2:HS	---	068	Paper Transfer	PCB8
029	PT Fan 1:NS	M27	069	Paper Separate dc	PCB9
030	PT Fan 2:NS	M26	070	Paper Separate ac	PCB9
031	Pelt. Cool Fan:NS	M32	099	ID Sensor:3c	S2
032	Pelt. Cool Fan:HS	M32	100	ID Sensor: K	S1
033	Potential Sn Fan	M31	101	QL:Y	QL4
034	Ozone Fan	M12	102	QL:M	QL3
035	PCU Fan:Y	M52	103	QL:C	QL2
036	PCU Fan:C	M53	104	QL:K	QL1
037	PCU Fan:M	M54	105	LD:Y	PCB23
038	PCU Fan:K	M55	106	LD:M	PCB25
039	Pelt. Cooling Fan	M32	107	LD:C	PCB24
040	Pelt. Cir. Fan	M33	108	LD:K	PCB26
041	Sub Hopper CL:Y	MC7	109	Polygon Mtr	M48
042	Sub Hopper CL:M	MC3	110	Feed Mtr 1:Fwd/Nor	M3
043	Sub Hopper CL:C	MC9	111	Feed Mtr 1:Fwd/Hi	M3
044	Sub Hopper CL:K	MC5	112	Feed Mtr 1:Fwd/Haf	M3

NOTE: --- means "not used"

Downloaded from www.Manualslib.com manuals search engine

5804	Output Chk		Output Check		
113	Feed Mtr 1:Rev/Nor	M3	155	Dup Inv M:Fwd/Hi	M22
114	Feed Mtr 1:Rev/Haf	M3	156	Dup Inv M:Fwd/Haf	M22
115	Feed Mtr 2:Fwd/Nor	M2	157	DupInvM:Fwd/TS	M22
116	Feed Mtr 2:Fwd/Hi	M2	158	DupTrans M:Fwd/Nor	M21
117	Feed Mtr 2:Fwd/Haf	M2	159	DupTrans M:Fwd/Hi	M21
118	Feed Mtr 2:Rev/Nor	M2	160	DupTrans M:Fwd/Haf	M21
119	Feed Mtr 2:Rev/Haf	M2	161	Dup JG SOL	SOL11
120	Feed Mtr 3:Fwd/Nor	M5	162	Inv Pos SOL	SOL12
121	Feed Mtr 3:Fwd/Hi	M5	163	Dup Trans CL	---
122	Feed Mtr 3:Fwd/Haf	M5	164	Dup Jog M:HP Sn	S45
123	Feed Mtr 3:Rev/Nor	M5	169	Drum Mtr:K	M45
124	Feed Mtr 3:Rev/Haf	M5	170	Drum Mtr:K:Haf	M45
125	Feed Mtr 4:Fwd/Nor	M4	171	Drum Mtr:M	M44
126	Feed Mtr 4:Fwd/Hi	M4	172	Drum Mtr:M:Haf	M44
127	Feed Mtr 4:Fwd/Haf	M4	173	Drum Mtr:C	M43
128	Feed Mtr 4:Rev/Nor	M4	174	Drum Mtr:C:Haf	M43
129	Feed Mtr 4:Rev/Haf	M4	175	Drum Mtr:Y	M42
130	Bypass Feed CL	MC1	176	Drum Mtr:Y:Haf	M42
131	Pick-up SOL:Tray 1	SOL5	177	PCU Mtr:K	M37
132	Pick-up SOL:Tray 2	---	178	PCU Mtr:K:Haf	M37
133	Pick-up SOL:Tray 3	SOL1	179	PCU Mtr:M	M36
134	Pick-up SOL:Tray 4	SOL3	180	PCU Mtr:M:Haf	M36
135	Bypass Pick-up SOL	SOL15	181	PCU Mtr:C	M39
136	Rev SOL:Tray 1	SOL6	182	PCU Mtr:C:Haf	M39
137	Rev SOL:Tray 2	---	183	PCU Mtr:Y	M38
138	Rev SOL:Tray 3	SOL2	184	PCU Mtr:Y:Haf	M38
139	Rev SOL:Tray 4	SOL4	185	Image Transfer Motor	M46
140	Tan Conn Rel SOL	SOL9	186	Image Transfer Motor:Haf	M46
141	Tan Lock SOL	SOL10	187	PRT Motor	M17
142	TanShift M:Fwd/Rev	M10	188	PRT Motor:Haf	M17
145	Relay Mtr:Fwd/Nor	M18	189	Fusing/Exit M	M16
146	Relay M:Fwd/Dup	M18	190	Fusing/Exit M:Haf	M16
147	Relay M:Fwd/Haf	M18	191	Fusing/Exit M:1/3	M16
148	Relay M:Rev/Nor	M18	192	ITB Lift M:Fwd	M11
149	Relay M:Rev/Haf	M18	193	ITB Lift M:Rev	M11
150	Reg Mtr:Rev/Haf	M23	194	Jam LED:Fusing	LED2
151	Reg Mrt:Half Spd	M23	195	Jam LED:Exit	LED3
152	Guide Rel SOL	SOL13	200	Scanner Fan	M56
153	Exit JG SOL	SOL14	202	Scanner Lamp	L1
154	Dup Inv M:Fwd/Nor	M22	203	Scanner Motor	M1

NOTE: --- means "not used"

Downloaded from www.Manualslib.com manuals search engine

5.7 ARDF INPUT/OUTPUT CHECK

5.7.1 ADF INPUT CHECK: SP6007

1. Open SP mode SP6007.
2. Select the SP number that corresponds to the component you wish to check. (Refer to the table below.)
3. Press On then press Off to test the selected item. You cannot exit and close this display until you click Off to switch off the output check currently executing.

Bit	7 6 5 4 3 2 1 0
Data	**1 1 0 0 1 0 1 0**

Group 1

Bit	Part/Component	Status			
7	Registration Sensor	0:	Off	1:	On
6	Interval Sensor	0:	Off	1:	On
5	Skew Correction Sensor	0:	Off	1:	On
4	Separation Sensor	0:	Off	1:	On
3	Original Set Sensor	0:	Off	1:	On
2	B5 Detection Sensor	0:	Off	1:	On
1	A4 Detection Sensor	0:	Off	1:	On
0	LG Detection Sensor	0:	Off	1:	On

Group 2

Bit	Part/Component	Status			
7	APS Start Sensor	0:	Off	1:	On
6	ARDF Position Sensor	0:	Off	1:	On
5	Exit Sensor	0:	Off	1:	On
4	Original Width Sensor 5	0:	Off	1:	On
3	Original Width Sensor 4	0:	Off	1:	On
2	Original Width Sensor 3	0:	Off	1:	On
1	Original Width Sensor 2	0:	Off	1:	On
0	Original Width Sensor 1	0:	Off	1:	On

Group 3

Bit	Part/Component	Status			
7		0:	Off	1:	On
6		0:	Off	1:	On
5	Lower Inverter Sensor	0:	Off	1:	On
4	Upper Inverter Sensor	0:	Off	1:	On
3	Bottom Plate Position Sensor	0:	Off	1:	On
2	Bottom Plate HP Sensor	0:	Off	1:	On
1	Pick-Up Roller HP Sensor	0:	Off	1:	On
0	Feed Cover Sensor	0:	Off	1:	On

Downloaded from www.Manualslib.com manuals search engine

5.7.2 ADF OUTPUT CHECK: SP6008

1. Open SP mode SP6008.
2. Select the SP number that corresponds to the component you wish to check. (Refer to the table below.)
3. Press On then press Off to test the selected item. You cannot exit and close this display until you click Off to switch off the output check currently executing.

6008	**ADF Output Chk**	ADF Output Check	
	Turns on the ADF electrical components individually for testing. Select the component to test, then press the "ON" button. Besure to press the "OFF" button as soon as you hear the component turn on.		
001	ADF Feed M:Fwd	007	ADF Bot Inv M:Fwd
002	ADF Feed M:Rev	008	ADF Bot Inv M:Rev
003	ADF Trans M:Fwd	009	ADF Pick-up M:Fwd
004	ADF Ext M:Fwd	010	ADF BotPlt M:Rev
005	ADF Top Inv M:Fwd	011	ADF Top Inv SOL
006	ADF Top Inv M:Rev	012	ADF Bot Inv SOL

Downloaded from www.Manualslib.com manuals search engine

5.8 FINISHER 1 (B700/B701) INPUT/OUTPUT CHECK

5.8.1 INPUT CHECK: FINISHER 1 (B700/B701) SP6121

6121	Input Chk:Fin1	Input Check: Finisher 1 (B700/B701)	
	These are the input checks for the 2000-Sheet/3000-Sheet Finishers B700/B701.		
001	Entrance Sn	026	Punch Full Sn
002	Proof Exit Sn	027	Punch HP Sn
003	Proof Full Sn	028	Punch DIP SW1
004	Up Tray Exit Sn	029	Punch DIP SW2
005	Staple Exit Sn	030	Stack Junc HP Sn
006	Shift Roll HP Sn	031	Stack Present Sn
007	Exit Sn	032	Clamp Roll HP Sn
008	Exit Guide HP Sn	033	Fold Entrance Sn
009	Low Tray Hgt Sn	034	Bot Fence HP Sn
010	Up Tray Hgt Sn	035	Fol Cam HP Sn
011	Up Tray Full Sn	036	Fold Plate HP Sn
012	Stack Roll HP Sn	037	Fold Exit Sn
013	Joggr HP Sn	038	Book Full Sn 1
014	Feed Out HP Sn	039	Book Full Sn 2
015	Stp Tray Ppr Sn	040	BStapler 1 Op
016	Stp Tray HP Sn	041	BStapler 1 In
017	Stp Rotate HP Sn	042	BStaples 1 In
018	Up Tray Limit SW	043	BStapler 2 Op
019	Door Switch	044	BStapler 2 In
020	Corner Stp Op	045	BStaples 2 In
021	Corner Stp 1	046	Up TrayFull:3000
022	Corner Staples	047	Out Jog HP Sn 1
023	Punch HP Sn	048	Out Jog HP Sn 2
024	Punch Unit HP Sn	049	OutJog RetractSn
025	Punch Ppr HP Sn		

Downloaded from www.Manualslib.com manuals search engine

5.8.2 OUTPUT CHECK FINISHER 1: (B700/B701) SP6123

6123	Output Chk:Fin1	Output Check: Finisher 1 (B700/B701)	
	These are the output checks for the 2000-Sheet/3000-Sheet Finishers B700/B701.		
001	Entrance M	017	Pos Roll SOL
002	Up Trans M	018	Stp Edge Plate SOL
003	Low Trans M	019	Book Press SOL
004	Exit M	020	Stack JG M
005	Pos Roll M	021	Fold Bot Fence M
006	Shift M	022	Book Stp M:Front
007	Exit Guide M	023	Book Stp M:Back
008	Tray Lift M	024	Fold Plate M
009	Stack Roller M	025	Fold Roll M
010	Jogger M	026	Clamp Roll M
011	Feed Out M	027	Punch M
012	Stp Shift M	028	Punch Move M
013	Stp Rot M	029	Reg M
014	Corner Stp M	030	Output Jog M: Front
015	Up JG SOL	031	Output Jog M: Rear
016	Dn JG SOL	032	Output Jog Retract M

Downloaded from www.Manualslib.com manuals search engine

5.9 FINISHER 2 (B706) INPUT/OUTPUT CHECK

5.9.1 INPUT CHECK FINISHER 2: (B706) SP6122

6122	**Input Chk:Fin2**	Input Check: Finisher 2 (B706)	
	These are the input checks for the 3000-Sheet Finisher B706.		
001	Entrance Sn	021	Proof Full Sn
002	Proof Exit Sn	022	Staple Rotate HP Sn
003	Shift Exit Sn	023	S Hopper Full Sn
004	Stp Exit Sn	024	PreStack Sn
005	Tray Bot Plt Sn	025	Stack Plate HP
006	Tray Near Bot Sn	026	Exit Guide HP Sn
007	Release HP Sn	027	Stapler Return Sn
008	Jogger HP Sn	028	Stapler Ready Sn
009	Shift HP Sn	029	Stack Plate HP Sn 1
010	Stapler Side HP Sn	030	Stack Plate HP Sn 2
011	Stapler HP Sn	031	Stp Hammer HP Sn
012	Staple Sn	032	Retrun Drv HP Sn
013	Staple Tray Sn	033	Paper Hgt Sn
014	Door Open Sn	034	Tray Limit SW
015	Punch Sn	035	Punch HP Sn 2
016	Punch HP Sn 1	036	Shift Jog Sn
017	Puncout Full Sn	037	Shift Jog HP Sn
018	Paper Hgt Sn:Stp	038	Out Jog Retract Sn
019	Paper Hgt Sn:Shift	039	Emergency Stop SW
020	Cart Detect Sn		

Downloaded from www.Manualslib.com manuals search engine

5.9.2 OUTPUT CHECK FINISHER 2 (B706) SP6125

6125	Output Chk:Fin2	Output Check: Finisher 2 (B706)	
	These are the input checks for the 3000-Sheet Finisher B706.		
001	Off:Stop	014	Stp Lift M:1 Op
002	Main M:Cont	015	Stp Exit M:Cont
003	Shift Exit M:Cont	016	Open Exit M:Cont
004	Proof SW SOL:Cont	017	Fold Plate M:1 Op
005	Tray Lift M:1 Op	018	PrestackJG SOL:1Op
006	Jogger M:1 Op	019	Guide JG SOL:1 Op
007	Stp M:1 Op Horiz	020	Stp Return:1 Op
008	Stp M:1 Op	021	Fold M:Front:1 Op
009	Punch M:1 Op	022	Fold M:Back:1 Op
010	Stp JG SOL:Cont	023	Return Drv M:1 Op
011	Stp Hammer M:1 Op	024	Return TransM:1Op
012	Feed Out M:1 Op	025	Shift Jog M:1 Op
013	Shift M:1 Op	026	ShiftJogShuntM:1Op

Downloaded from www.Manualslib.com manuals search engine

5.10 USING THE DEBUG LOG

This machine provides a Save Debug Log feature that allows the Service Engineer to save and retrieve error information for analysis.

Every time an error occurs, debug information is recorded in volatile memory but this information is lost when the machine is switched off and on.

The Save Debug Log feature provides two main features:

- Switching on the debug feature so error information is saved directly to the HDD for later retrieval.
- Copying the error information from the HDD to an SD card.

When a user is experiencing problems with the machine, follow the procedure below to set up the machine so the error information is saved automatically to the HDD.

5.10.1 SWITCHING ON AND SETTING UP SAVE DEBUG LOG

The debug information cannot be saved the until the “Save Debug Log” function has been switched on and a target has been selected.

1. Enter the SP mode and switch the Save Debug Log feature on.
   - Press [ ] then use the 10-key pad to enter 1 0 7.
   - Press and hold down [C/⊘] for more than 3 seconds.
   - Press “Copy SP”.
   - On the LCD panel, open SP5857.
2. Under “5857 Save Debug Log”, press “1 On/Off”.

```
COPY : SP-5-857-001
 Save Debug Log
 On/Off (1:ON  0:OFF)

                1_

          Initial 0
```

3. On the operation panel keypad, press “1” then press #. This switches the Save Debug Log feature on.
   NOTE: The default setting is “0” (OFF). This feature must be switched on in order for the debug information to be saved.

Downloaded from www.Manualslib.com manuals search engine

4. Next, select the target destination where the debug information will be saved. Under “5857 Save Debug Log”, press “2 Target”, enter “2” with the operation panel key to select the hard disk as the target destination, then press #.

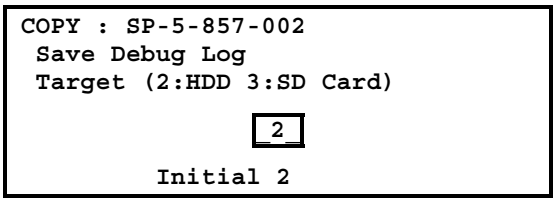

NOTE: Select “3 SD Card” to save the debug information directly to the SD card if it is inserted in the service slot.

5. Now press “5858” and specify the events that you want to record in the debug log. SP5858 (Debug Save When) provides the following items for selection.

1	Engine SC Error	Saves data when an engine-related SC code is generated.
2	Controller SC Error	Saves debug data when a controller-related SC Code is generated.
3	Any SC Error	Saves data only for the SC code that you specify by entering code number.
4	Jam	Saves data for jams.

NOTE: More than one event can be selected.

Example 1: To Select Items 1, 2, 4

Press the appropriate items(s). Press “ON” for each selection. This example shows “Engine SC Error” selected.

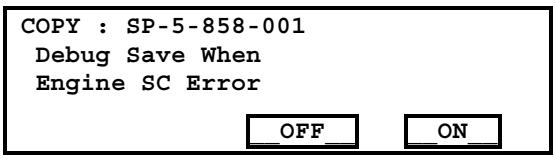

Example 2: To Specify an SC Code

Press “3 Any SC Error”, enter the 3-digit SC code number with the operation panel number keys, then press #. This example shows an entry for SC670.

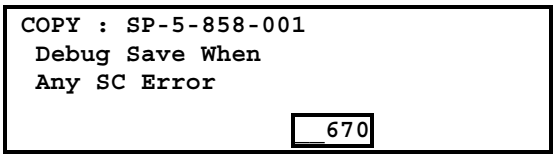

NOTE: For details about SC code numbers, please refer to the SC tables in Section “4. Troubleshooting”.

Downloaded from www.Manualslib.com manuals search engine

6. Next, select the one or more memory modules for reading and recording debug information. Press “5859”.

   Under “5859” press the appropriate key item for the module that you want to record.

   Enter the appropriate 4-digit number, then press #.

   NOTE: Refer to the two tables below for the 4-digit numbers to enter for each key.

   The example below shows “Key 1” with “2222” entered.

```
COPY : SP-5-859-001
 Debug Save Key No.
 Key 1
              2222
```

   The following keys can be set with the corresponding numbers. (The initials in parentheses indicate the names of the modules.)

4-Digit Entries for Keys 1 to 10

KEY NO.	COPY	PRINTER	SCANNER	WEB
1	2222 (SCS)			
2	2223 (SRM)			
3	256 (IMH)			
4	1000 (ECS)			
5	1025 (MCS)			
6	4848 (COPY)	4400 (GPS)	5375 (Scan)	5682 (NFA)
7	2224 (BICU)	4500 (PDL)	5682 (NFA)	6600 (WebDB)
8		4600 (GPS-PM)	3000 (NCS)	3300 (PTS)
9		2000 (NCS)	2000 (NCS)	6666 (WebSys)
10		2224 (BICU)		2000 (NCS)

NOTE: The default settings for Keys 1 to 10 are all zero (“0”).

Key to Acronyms

Acronym	Meaning	Acronym	Meaning
ECS	Engine Control Service	NFA	Net File Application
GPS	GW Print Service	PDL	Printer Design Language
GSP-PM	GW Print Service – Print Module	PTS	Print Server
IMH	Image Memory Handler	SCS	System Control Service
MCS	Memory Control Service	SRM	System Resource Management
NCS	Network Control Service	WebDB	Web Document Box (Document Server)

   The machine is now set to record the debugging information automatically on the HDD (the target selected with SP5857-002) for the events that you selected SP5858 and the memory modules selected with SP5859.

Downloaded from www.Manualslib.com manuals search engine

Please keep the following important points in mind when you are doing this setting:

- Note that the number entries for Keys 1 to 5 are the same for the Copy, Printer, Scanner, and Web memory modules.
- The initial settings are all zero.
- These settings remain in effect until you change them. Be sure to check all the settings, especially the settings for Keys 6 to 10. To switch off a key setting, enter a zero for that key.
- You can select any number of keys from 1 to 10 (or all) by entering the corresponding 4-digit numbers from the table.
- You cannot mix settings for the groups (COPY, PRINTER, etc.) for 006 to 010. For example, if you want to create a PRINTER debug log you must select the settings from the 9 available selections for the “PRINTER” column only.
- One area of the disk is reserved to store the debug log. The size of this area is limited to 4 MB.

5.10.2 RETRIEVING THE DEBUG LOG FROM THE HDD

Retrieve the debug log by copying it from the hard disk to an SD card.

1. Insert the SD card into the service slot of the copier.
2. Enter the SP mode and execute SP5857-009 (Copy HDD to SD Card (Latest 4 MB)) to write the debugging data to the SD card.
3. After you return to the service center, use a card reader to copy the file and send it for analysis to Ricoh by email, or just send the SD card by mail.

Downloaded from www.Manualslib.com manuals search engine

5.10.3 RECORDING ERRORS MANUALLY

Since only SC errors and jams are recorded to the debug log automatically, for any other errors that occur while the service engineer is not on site, please instruct customers to perform the following immediately after occurrence to save the debug data. Such problems would include a controller or panel freeze.

NOTE: In order to use this feature, the service engineer must have previously switched on the Save Debug Feature (SP5857-001) and selected the hard disk as the save destination (SP5857-002).

1. When the error occurs, on the operation panel, press Clear Modes (Clear Modes).

2. On the operationl panel, enter “01” then hold down C/⊽ for at least 3 sec. until the machine beeps then release. This saves the debug log to the hard disk for later retrieval with an SD card by the service representatives.

3. Switch the machine off and on to resume operation.

   The debug information for the error is saved on the hard disk so the service representatives can retrieve it on their next visit by copying it from the HDD to an SD card.

Downloaded from www.Manualslib.com manuals search engine

5.10.4 NEW DEBUG LOG CODES

SP5857-015 Copy SD Card-to-SD Card: Any Desired Key

This SP copies the log on an SD card (the file that contains the information written directly from shared memory) to a log specified by key number. The copy operation is executed in the log directory of the SD card inserted in the same slot. (This function does not copy from one slot to another.) Each SD card can hold up to 4 MB of file data. Unique file names are created for the data during the copy operation to prevent overwriting files of the same name. This means that log data from more than one machine can be copied onto the same SC card. This command does not execute if there is no log on the HDD for the name of the specified key.

SP5857-016 Create a File on HDD to Store a Log

This SP creates a 32 MB file to store a log on the HDD. However, this is not a completely empty file. The created file will hold the number “2225” as the SCS key number and other non-volatile information. Even if this SP is not executed, a file is created on the HDD when the first log is stored on the HDD, but this operation takes time. This creates the possibility that the machine may be switched off and on before the log can be created completely. If you execute this SP to create the log file beforehand, this will greatly reduce the amount of time required to acquire the log information and save onto the HDD. With the file already created on the HDD for the log file, the data only needs to be recorded; a new log file does not require creation. To create a new log file, execute SP5857-011 to delete the debug log data from the HDD and then execute this SP (SP5857-016).

SP5857-017 Create a File on SD Card to Store a Log

This SP creates a 4 MB file to store a log on an SD card. However, this is not a completely empty file. The created file will hold the number “2225” as the SCS key number and other non-volatile information. Even if this SP is not executed, a file is created on the SD card when the first log is stored on the SD card, but this operation takes time. This creates the possibility that the machine may be switched off and on before the log can be created completely. If you execute this SP to create the log file beforehand, this will greatly reduce the amount of time required to acquire the log information and save onto the SD card. With the file already created on the SD card for the log file, the data only needs to be recorded; a new log file does not require creation. To create a new log file, execute SP5857-012 to delete the debug log data from the SD card and then execute this SP (SP5857-017).

Downloaded from www.Manualslib.com manuals search engine

5.11 USER TOOLS

5.11.1 OVERVIEW

This section is a summary of the user tools. Refer to the operator's manual for more details.

1. On the operation panel, press the User Tools button.
2. Press the appropriate key, then access the following items:
   - System Settings
   - Maintenance
   - Copier/Document Server Features
   - Printer Features
   - Scanner Features
   - Inquiry
   - Counter

You can use these tools while the machine is operating, during a jam, or even when a warning is displayed. However, you cannot move to the user screen while in the SP mode, but you can easily switch between the SP mode screen and the operation screen by pressing Copy Window.

During machine operation, in the jam mode, or while a warning message is displayed, the display language can be changed and the counters can be displayed. However, the counters cannot be printed.

Downloaded from www.Manualslib.com manuals search engine

5.11.2 SYSTEM SETTINGS

Key press: [User Tools]> "System Settings"

System Settings Map

General Features
Panel Tone
Warm Up Notice
Copy Count Display
Function Priority
Print Priority
Function Reset Timer
Interleave Print
Output Copier
Output: Document Server
Output: Printer
ADF Original Table Elevation
Job List Display Time
Tray Paper Settings
Paper Tray Priority: Copier
Paper Tray Priority: Printer
Tray Paper Size: Tray 2
Tray Paper Size: Tray 3
Paper Type: Bypass Tray
Paper Type: Tray 1
Paper Type: Tray 2
Paper Type: Tray 3
Paper Type: LCT
Front Cover Select Tray
Back Cover Select Tray
Slip Sheet Tray
Designation Sheet Tray 1
Designation Sheet Tray 2
Printer Bypass Paper Size
Paper Type Detect
Double Feed Detect

Downloaded from www.Manualslib.com manuals search engine

System Settings Map (Continued)

Timer Settings
Auto Off Timer
Energy Saver Timer
Panel Off Timer
System Reset Timer
Copier/Document Server Auto Reset Timer
Printer Auto Reset Timer
Scanner Auto Reset Timer
Set Date
Set Time
Weekly Timer Code
Auto Logout Timer
Weekly Timer: Monday
Weekly Timer: Tuesday
Weekly Timer: Wednesday
Weekly Timer: Thursday
Weekly Timer: Friday
Weekly Timer: Saturday
Weekly Timer: Sunday
Interface Settings
Network
IP Address
Gateway Address
DNS Configuration
DDNS Configuration
Domain Name
WINS Configuration
Effective Protocol
NW Frame Type
SMB Computer Name
SMB Work Group
Ethernet Speed
Ping Command
Permit SNMP V3 Communication
Permit SSL/TLS Communication
Host Name
Machine Name
File Transfer
Delivery Option
SMTP Server
SMTP Authentication
POP Before SMTP
POP3 Setting
Administrator's E-mail Address
E-mail Communication Report
Default User Name/Password (Send)
Program/Change/Delete E-mail Message
Program/Change/Delete Subject
Scanner Recall Interval Time
Number of Scanner Recalls
Auto Specify Sender Name

Downloaded from www.Manualslib.com manuals search engine

System Settings Map (Continued)

Administrator Tools
User Authentication Management
Administrator Authentication Management
Program/Change Administrator
Key Counter Management
External Charge Unit Management
Extended Security
Extend Change Unit Management
Enhanced Extend Change Unit Management
Display Print Counter
Display/Clear/Print Counter Per User
Address Book Management
Address Book: Program/Change/Delete/Delete Group
Address Book: Edit Title
Address Book: Change Order
Print Address Book: Destination List
Address Book: Select Title
Auto Delete File
Delete All Files
Program/Change/Delete LDAP Server
Use LDAP Server
AOF (Always ON)
Service Test Call

5.11.3 MAINTENANCE

Key press: [User Tools]> "Maintenance"

Maintenance Map

Auto Color Calibration
Color Registration

Downloaded from www.Manualslib.com manuals search engine

5.11.4 COPIER/DOCUMENT SERVER FEATURES

Key press: [User Tools]> "Copier/Document Server Features"

Copier/Document Server Features Map

General Features
Auto Paper Select Priority
Paper Display
Original Type Display
Original Type Priority
Original Photo Type Priority
Auto Tray Switching
Duplex Mode Priority
Copy Orientation in Duplex Mode
Original Orientation in Duplex Mode
Max. Copy Quantity
Change Initial Mode
Tone: Original Remains
Job End Call
Copy Function Key: F1
Copy Function Key: F2
Copy Function Key: F3
Copy Function Key: F4
Copy Function Key: F5
Document Server Storage Key: F1
Document Server Storage Key: F2
Document Server Storage Key: F3
Document Server Storage Key: F4
Document Server Storage Key: F5
Document Server Print Key 1: F1
Document Server Print Key 1: F2
Document Server Print Key 1: F3
Document Server Print Key 1: F4
Document Server Print Key 1: F5
Reproduction Ratio
Shortcut R/E 1
Shortcut R/E 2
Shortcut R/E 3
Enlarge 1
Enlarge 2
Enlarge 3
Enlarge 4
Enlarge 5
Priority Setting: Enlarge
Reduce 1
Reduce 2
Reduce 3
Reduce 4
Reduce 5
Reduce 6
Priority Setting: Reduce
Ratio for Create Margin
R/E Priority

Downloaded from www.Manualslib.com manuals search engine

Copier/Document Server Features Map (Continued)

Edit
Front Margin: Left/Right
Back Margin: Left/Right
Front Margin: Top/Bottom
Back Margin: Top/Bottom
1-Sided → 2-Sided Auto Margin: T to T
1-Sided → 2-Sided Auto Margin: T to B
Erase Border Width
Erase Original Shadow in Combine
Erase Center Width
Copy Back Cover
Front Cover Copy in Combine
Orientation: Booklet, Magazine
Copy Order in Combine
Image Repeat Separation Line
Double Copies Separation Line
Separation Line in Combine
Stamp
Background Numbering
Size
Density
Stamp Color
Preset Stamp
Stamp Priority
Stamp Language
Stamp Position: COPY
Stamp Position: URGENT
Stamp Position: PRIORITY
Stamp Position: For Your Info.
Stamp Position: PRELIMINARY
Stamp Position: For Internal Use Only
Stamp Position: CONFIDENTIAL
Stamp Position: DRAFT
Stamp Format: COPY
Stamp Format: URGENT
Stamp Format: PRIORITY
Stamp Format: For Your Info.
Stamp Format: PRELIMINARY
Stamp Format: For Internal Use Only
Stamp Format: CONFIDENTIAL
Stamp Format: DRAFT

Downloaded from www.Manualslib.com manuals search engine

Copier/Document Server Features Map (Continued)

User Stamp
Program/Delete Stamp
Stamp Position: 1
Stamp Position: 2
Stamp Position: 3
Stamp Position: 4
Stamp Format: 1
Stamp Format: 2
Stamp Format: 3
Stamp Format: 4
Stamp Color: 1
Stamp Color: 2
Stamp Color: 3
Stamp Color: 4
Date Stamp
Format
Font
Stamp Position
Stamp Setting
Size
Superimpose
Stamp Color
Page Numbering
Stamp Format
Font
Size
Duplex Back Page Stamping Position
Page Numbering in Combine
Stamp on Designating Slip Sheet
Stamp Position P1, P2
Stamp Position: 1/5 …
Stamp Position: -1-, -2- …
Stamp Position: P.1, P.2 …
Stamp Position: 1, 2, …
Stamp Position: 1-1, 1-2 …
Superimpose
Input/Output
Switch to Batch
SADF Auto Reset
Rotate Sort: Auto Paper Continue
Auto Sort
Memory Full Auto Scan Restart
Select Stapling Position (Top Left)
Select Stapling Position (Bottom Left)
Select Stapling Position (Top Right)
Select Stapling Position (Bottom Right)
Select Stack Position
Select Punch Type
Letterhead Setting
Eject Copy Face Up/Down in Glass Mode
Eject Copy Face Up/Down in Bypass Mode

Downloaded from www.Manualslib.com manuals search engine

5.11.5 PRINTER FEATURES

Key press: [User Tools]> "Printer Features"

Printer Features Map

List/Test Print
Multiple Lists
Config. Page
Error Log
Menu List
PCL Config./Font Page
PS Config./Font Page
PDF Config./Font Page
Hex Dump
Maintenance
4 Color Graphic Mode
System
Print Error Report
Auto Continue
Memory Overflow
Job Separation
Memory Usage
Duplex
Copies
Blank Page Print
B&W Page Detect
Spool Image
Reserved Job Waiting
Printer Language
Sub Paper Size
Page Size
Letterhead Setting
Bypass Tray Setting Priority
Edge to Edge Printing
Default Printer Language
Host Intervace
I/O Buffer
I/O Timeout

Downloaded from www.Manualslib.com manuals search engine

Printer Features Map (Continued)

PCL Menu
Orientation
Form Lines
Font Source
Font Number
Point Size
Font Pitch
Symbol Set
Courier Font
Extend A4 Width
Append CR to LF
Resolution
PS Menu
Data Format
Resolution
Color Setting
Color Profile

Downloaded from www.Manualslib.com manuals search engine

5.11.6 SCANNER FEATURES

Key press: [User Tools]> "Scanner Features"

Scanner Features Map

Scan Settings
Default Scan Settings
Wait Time for Next Orig.: Exposure Glass
Wait Time for Next Orignals: SADF
Original Setting
Switch to Batch
Mixed Original Sizes Priority
Change Initial Mode
Background Density of ADS (Full Color)
Destination List Settings
Destination List Display Priority 2
Select Title
Send Settings
TWAIN Standby Time
File Type Priority
Compression (Black & White)
Compression (Gray Scale/Full Color)
Print & Delete Scanner Journal
Print Scanner Journal
Max. E-Mail Size
Divide & Send E-Mail
E-Mail Information Language
Store File Priority
Administrator Tools

Downloaded from www.Manualslib.com manuals search engine

5.11.7 INQUIRY

Key press: [User Tools]> "Inquiry"

Consumables		**Machine Maintenance/Repair**	
Toner <Black>		Telephone No.	
Toner <Yellow>		Serial No. of Machine	
Toner <Magenata>		Sales Representative	
Toner <Cyan>		Telephone No.	

Print Inquiry List

To print the Inquiry List, press "Print Inquiry List", read the displayed message then press [Start] on the operation panel.

5.11.8 COUNTER

Total Counter
Print Counter List

Downloaded from www.Manualslib.com manuals search engine

6. DETAILS

6.1 GENERAL OVERVIEW

6.1.1 MAIN MACHINE

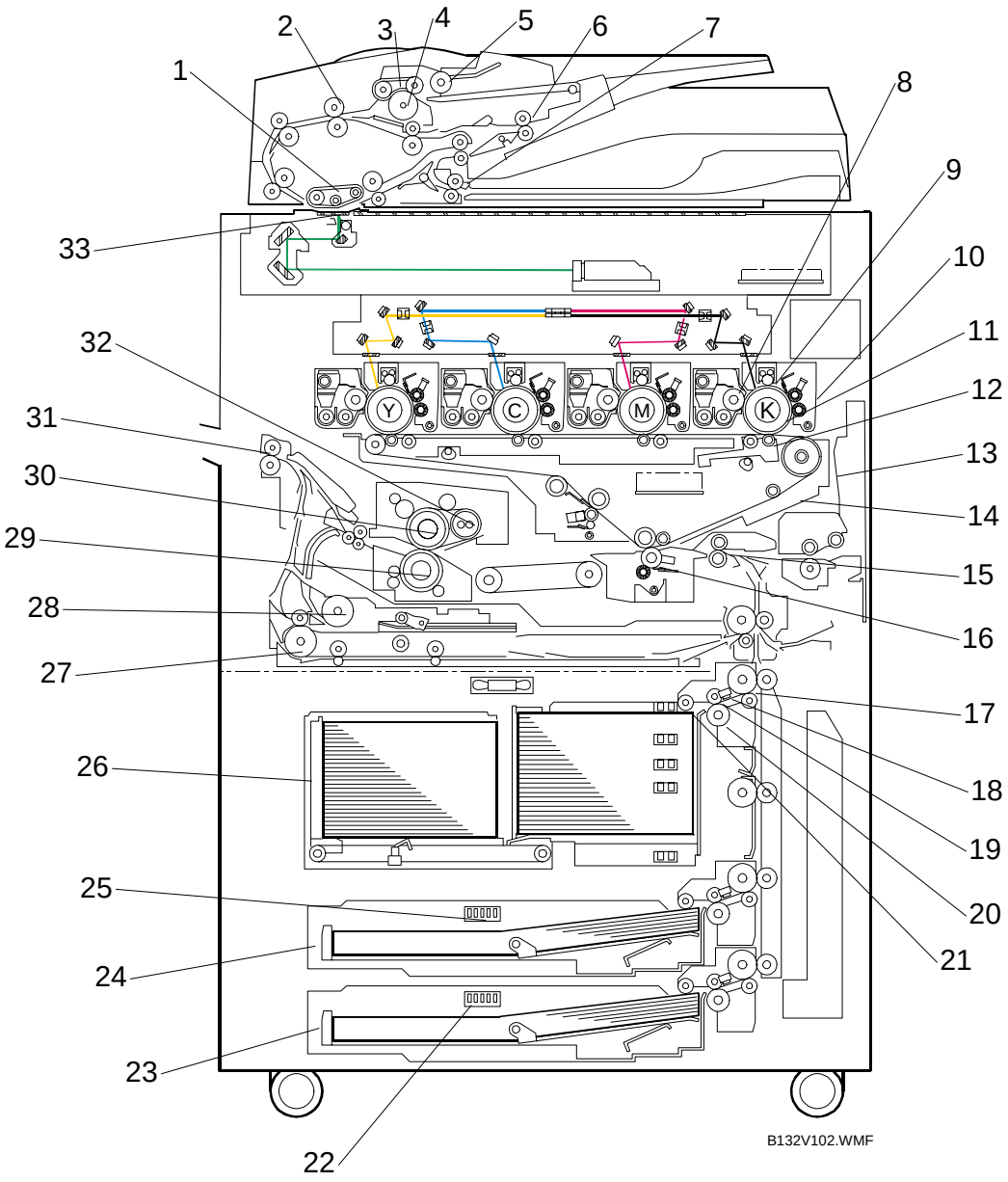

Downloaded from www.Manualslib.com manuals search engine

1. Transport Belt (ARDF)
2. Entrance Roller (ARDF)
3. Feed Belt (ARDF)
4. Separation Roller (ARDF)
5. Pick-up Roller (ARDF)
6. Upper Inverter Roller (ARDF)
7. Lower Inverter Roller (ARDF)
8. Development Roller
9. Charge Roller
10. PCU
11. OPC Drum
12. Image Transfer Roller
13. ITB Unit
14. Transfer Belt
15. Registration Roller
16. PTR Roller
17. Grip Roller
18. Feed Sensor (Paper Tray)
19. Feed Roller (Paper Tray)
20. Separation Roller (Paper Tray)
21. Pick-up Roller (Paper Tray)
22. Paper Size Switch (Tray 3)
23. Universal Tray (Tray 3)
24. Universal Tray (Tray 2)
25. Paper Size Switch (Tray 2)
26. Tandem Tray (Tray 1)
27. Inverter Exit Roller
28. Inverter Entrance Roller
29. Pressure Roller
30. Hot Roller
31. Exit Roller
32. Heating Roller
33. ARDF Exposure Glass

Downloaded from www.Manualslib.com manuals search engine

6.1.2 PAPER PATH: COVER INTERPOSER TRAY

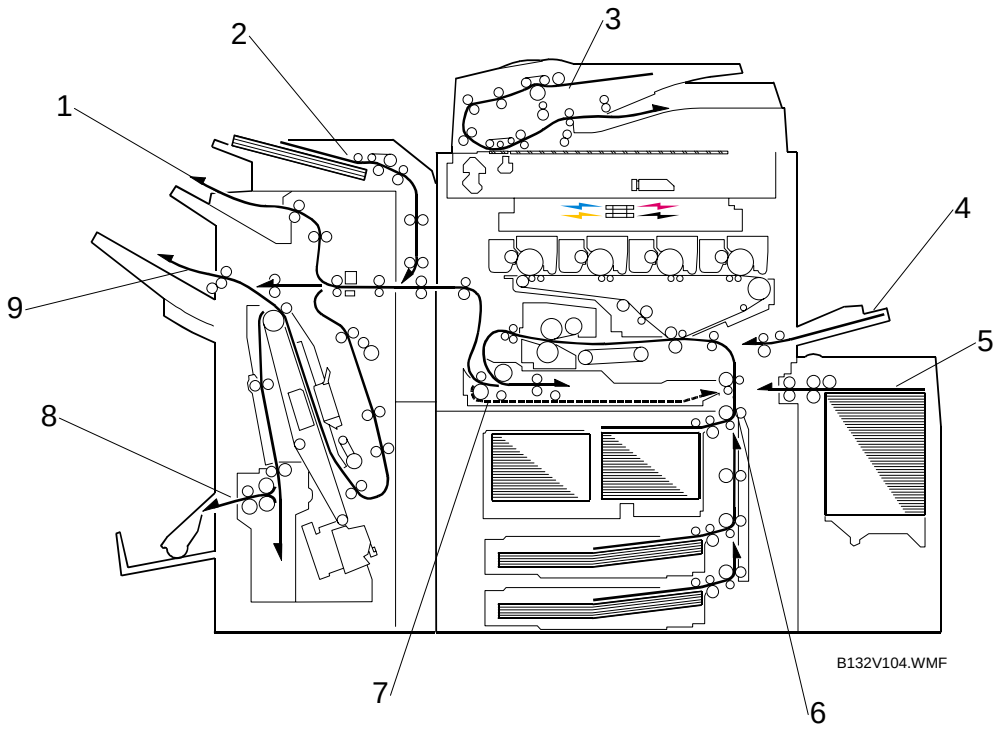

1. Proof Tray
2. Cover Sheet Path
3. Original Path
4. Bypass Tray
5. LCT Feed
6. Vertical Transport Path
7. Duplex Transport Path
8. Finisher Lower Tray (Booklet)
9. Finisher Upper Tray 1 (Shift)

Downloaded from www.Manualslib.com manuals search engine

6.1.3 PAPER PATH: 9-BIN MAILBOX

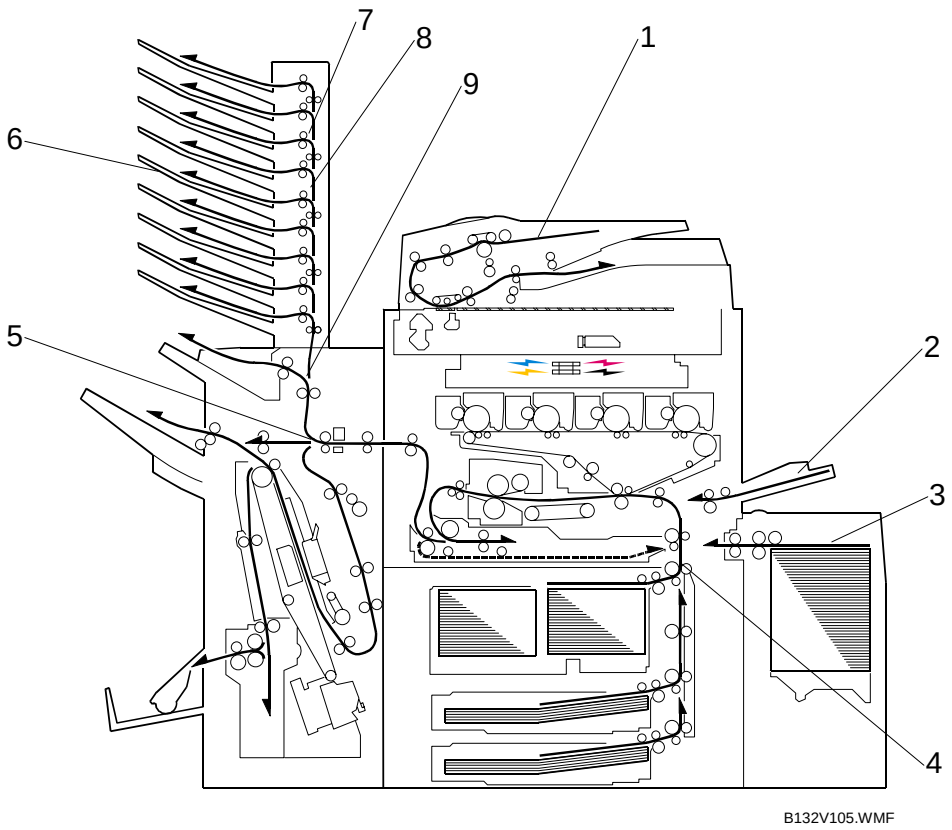

1. Original Paper Path
2. Bypass Feed
3. LCT Feed
4. Vertical Transport Path
5. Junction Gate
   (Paper goes up to the mailbox or out to the finisher's proof tray)
6. Selected Trays
7. Turn Gates
8. Mailbox Paper Path
9. Junction Gates
   (Two junction gates control the paper path inside the finisher)

Downloaded from www.Manualslib.com manuals search engine

6.1.4 DRIVE LAYOUT

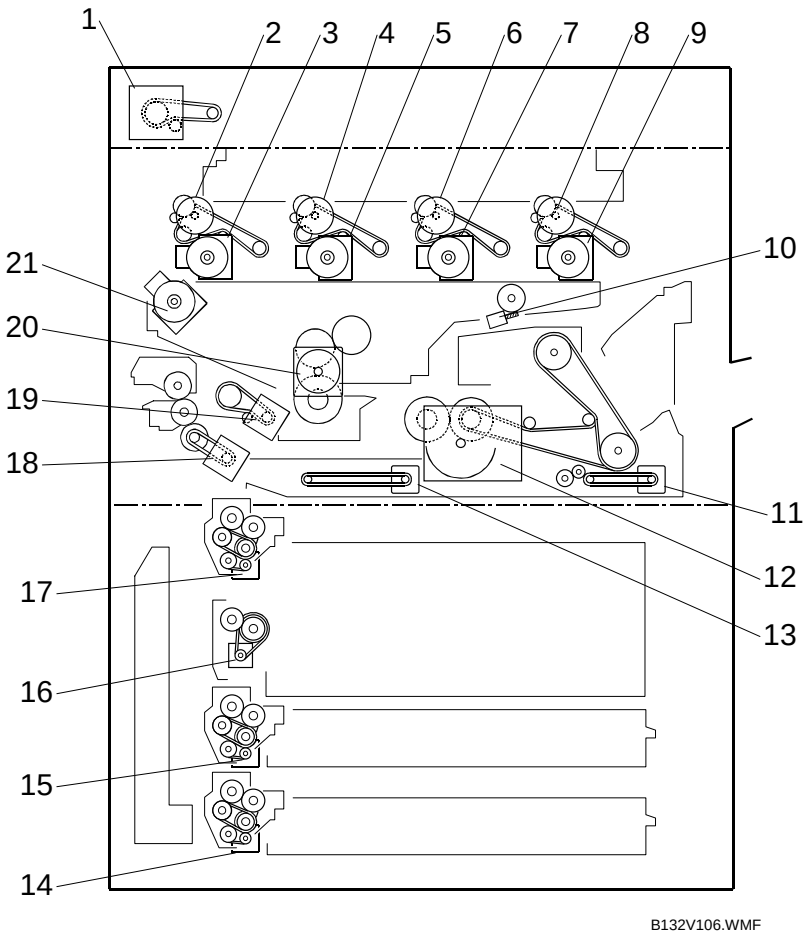

1. Scanner Motor
2. PCU Motor – K
3. Drum Motor – K
4. PCU Motor – M
5. Drum Motor – M
6. PCU Motor – C
7. Drum Motor – C
8. PCU Motor – Y
9. Drum Motor – Y
10. ITB Lift Motor
11. Duplex Inverter Motor
12. Fusing Exit Motor
13. Duplex Transport Motor
14. Paper Feed Motor 3
15. Paper Feed Motor 2
16. Lower Relay Motor
17. Paper Feed Motor 1
18. Bypass Feed Motor
19. Registration Motor
20. PTR Motor
21. ITB Drive Motor

Downloaded from www.Manualslib.com manuals search engine

6.2 BOARDS

6.2.1 BLOCK DIAGRAM

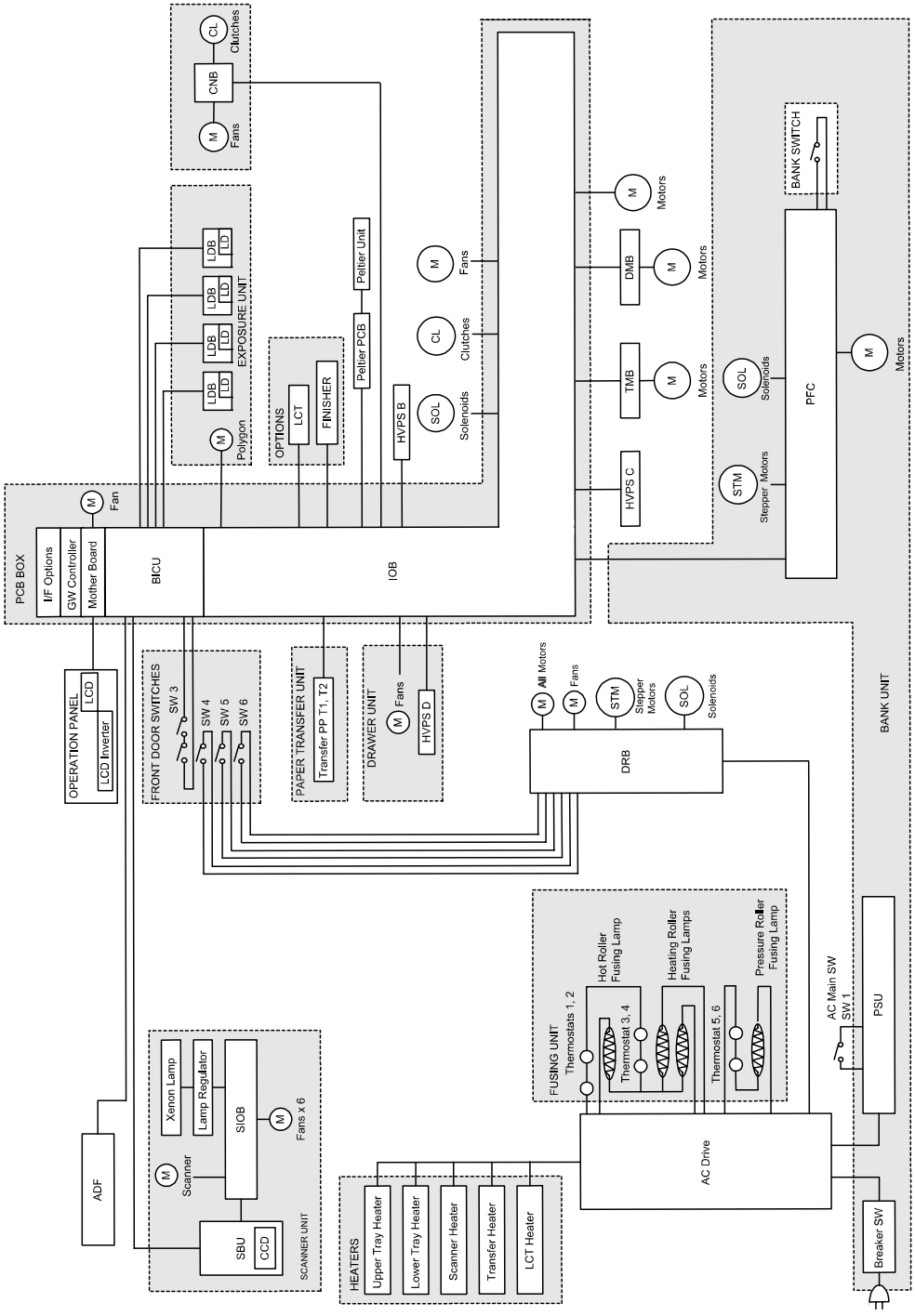

B132D981.WMF

Downloaded from www.Manualslib.com manuals search engine

6.2.2 COMPONENT DESCRIPTIONS

BICU (Base Engine and Image Control Unit)

The BICU is the main control board and controls these functions:

- Engine sequence control (all sensors, motors, fusing temperature control circuits)
- Image processing control (on the IPU)
- Scanning control
- GW controller interface
- Peripheral timing control

GW Controller and Mother Board

The controller board controls all the options. It contains the GW architecture ASICs, and connects to the BICU and PCI interface. During copying, the mother board stores compressed data, and controls these items:

- Operation panel interface
- Storage of SC information in NVRAM.

The controller board also has SD card sockets. These are used for these functions:

- Download firmware for updates
- Copy optional firmware onto one SD card. (Copied from Slot 3 to Slot 2.)
- Hold the firmware for the printer or printer/scanner option. (The firmware is stored on the SD card in Slot 2.)
- Hold the machine system firmware (this is on the SD card in Slot 1, which must never be removed.

IOB (I/O Control Board)

The I/O control board controls these items:

- Input and output ports for all sensors, motors, solenoids
- All drivers
- High voltage power supply
- Analog input signals. Converts analog data to 10-bit digital data. The CPU on the BICU reads this data.

Downloaded from www.Manualslib.com manuals search engine

SBU (Sensor Board Unit)

The SBU does the following:

- Takes the analog signals from the CCD and converts them to digital.
- Sends serial data to the BICU.
- Sends signals from the main CPU to the SIOB, to control the scanner components.

SIOB (Scanner I/O Board)

This board controls all the sensors in the scanner unit and the scanner motor. The CPU controls this board through the interfaces on the SBU and the BICU.

LDB (Laser Diode Drive Board)

This board contains the driver for the laser diodes.

DRB (Drive Board)

This board contains the circuits for the stepper motors that drive the printer engine, and distributes electrical power to all the other PCBs.

HDD (Hard Disk Drives)

This board stores all the temporary files for job processing and all permanent files for the document server.

PSU (Power Supply Unit)

Supplies DC to the machine, and contains the AC supply that controls the power to the fusing lamps.

Downloaded from www.Manualslib.com manuals search engine

6.2.3 CONTROLLER BOX VENTILATION

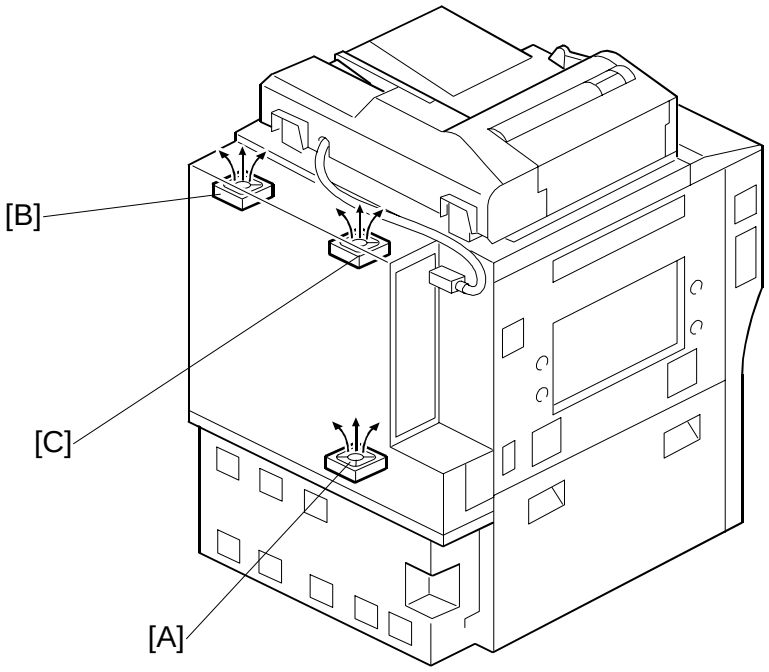

B132D968.WMF

[A]: HDD cooling fan
[B]: Controller box exhaust fan 1
[C]: Controller box exhaust fan 2

Three fans cool the PCBs in the controller box.

The HDD cooling fan [A] pulls cool air into the bottom of the PCB box.

The controller box exhaust fans [B] and [C] pull the hot air out of the top of the controller box.

Downloaded from www.Manualslib.com manuals search engine

6.3 COPY PROCESS OVERVIEW

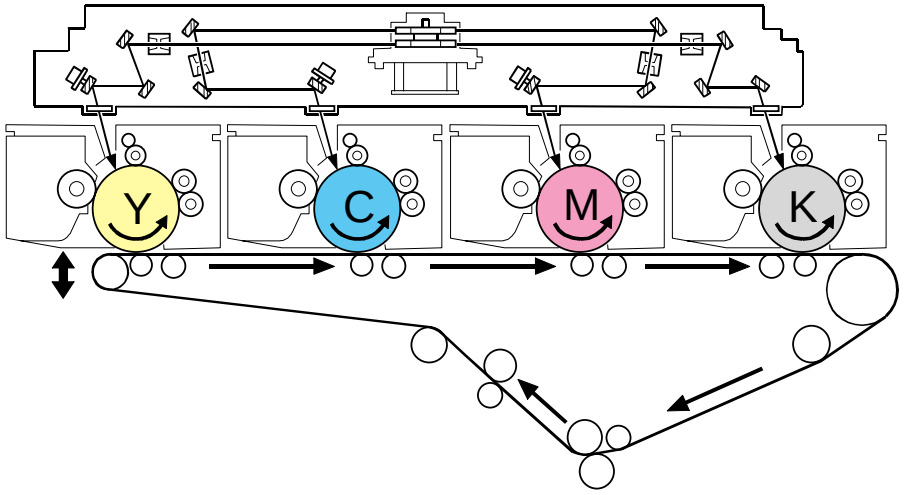

B132D001.WMF

This machine has four PCUs in a straight line: Y, M, C, K.

- The ITB lift motor raises and lowers the ITB unit.
- The ITB lift motor raises ITB for full-color copying. The drum of every PCU contacts the ITB below.
- The ITB lift motor lowers the ITB for black-and-white copying. Only the black PCU (on the far right) contacts the ITB below.
- During black-and-white copying, the drums of the other PCUs (Y, M, C) are separated from the ITB and do not rotate. This reduces wear on the moving parts of these PCUs during black-and-white copying.
- If a job contains black-and-white pages and full-color pages, the action of the ITB is controlled by **SP5880 001**. See section 6.12.3

Downloaded from www.Manualslib.com manuals search engine

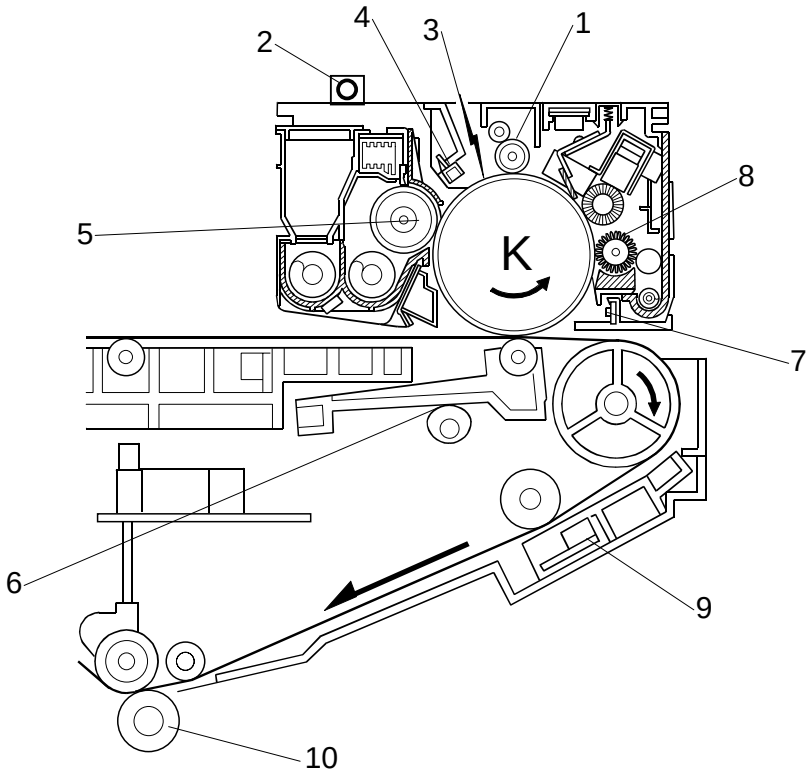

Here is a general description of the copy process in the black PCU. These mechanisms are identical in each PCU (Y, C, M, K).

1. **DRUM CHARGE**
   In the dark, the charge roller gives a negative charge to the drum. The charge stays on the surface of the drum because the OPC layer has a high electrical resistance in the dark.

2. **EXPOSURE**
   A xenon lamp exposes the original. Light reflected from the original passes to the CCD, where it is converted into an analog data signal. This data is converted to a digital signal, processed, and stored in the memory. At the time of printing, the data is taken from the memory and sent to the laser diode. For multi-copy runs, the original is scanned once and stored in a temporary file on the hard disk.

3. **LASER EXPOSURE**
   The processed image data from the scanned original is taken from the hard disk and two laser beams send it to the drum. The lasers write an electrostatic latent image on the drum surface. The amount of charge remaining as a latent image on the drum depends on the laser beam pulse duration and the laser power (controlled by the BICU).

Downloaded from www.Manualslib.com manuals search engine

4. **DRUM POTENTIAL SENSOR**
The drum potential sensor in each PCU detects the drum potential. Changes in conditions near the drum (heat, humidity, drum condition) change the drum potential. The machine uses the output from this sensor to adjust the voltages that are used during auto process control.

5. DEVELOPMENT
The magnetic developer brush of the development roller contacts the latent image on the drum surface. Toner particles are electrostatically attracted to the areas of the drum surface where the laser reduced the negative charge on the drum.

6. IMAGE TRANSFER
The developed toner images are transferred from the drums to the ITB. Rollers inside the ITB apply a high positive charge to the reverse side of the ITB. This positive charge pulls the toner particles from the drum to the ITB.

7. QUENCHING
The light from the quenching lamp electrically neutralizes the charge on the drum surface. After cleaning and quenching, the drum surface is ready for the next cycle.

8. **DRUM CLEANING**
First, a soft cleaning brush roller removes toner from the drum. Next, a lubrication roller, with a lubricant bar behind it, cleans the drum. Finally, an opposing cleaning blade removes remaining toner.

9. **ID SENSORS, MUSIC SENSORS**
Two ID sensors and three MUSIC sensors are in a straight line across the ITB. At fixed intervals, the laser in each PCU writes an ID sensor pattern on each drum surface (Y, M, C, K). These patterns are transferred to the ITB. The two ID sensors above the ITB (one for black and one for Y, M, C) measure the light reflected from each of the four patterns and output this data (Vsp) to the CPU. This Vsp is used for toner supply control. The MUSIC sensors read a different set of patterns to make adjustments to the laser main scan start timing, angle of the 3rd mirror, and the drum drive speeds. The MUSIC sensors ensure that the alignment of the images on the ITB is correct.

10. PAPER TRANSFER AND SEPARATION
A strong negative charge applied to the PTR idle roller repulses the image from the ITB onto the paper. A paper discharge plate neutralizes the charge on the paper and ITB. Then the curvature of the feed path allows the paper to separate from the ITB.

Downloaded from www.Manualslib.com manuals search engine

6.4 ARDF

6.4.1 OVERVIEW

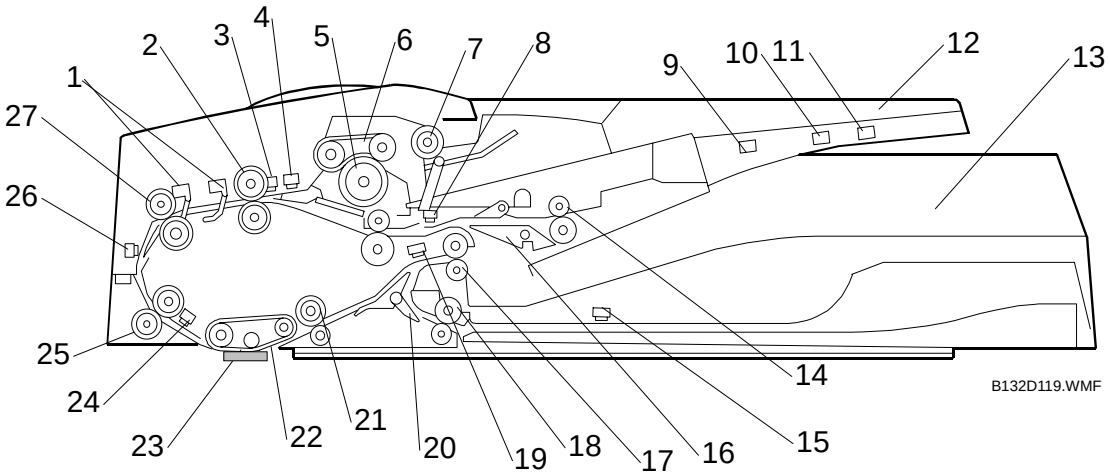

1. Original Width Sensors (x 5)
2. Entrance Roller
3. Skew Correction Sensor
4. Separation Sensor
5. Separation Roller
6. Feed Belt
7. Pick-up Roller
8. Upper inverter sensor
9. Original Length Sensor 1
10. Original Length Sensor 2
11. Original Length Sensor 3
12. Original Tray
13. Exit Tray
14. Upper Inverter Roller
15. Lower Inverter Sensor
16. Upper Junction Gate
17. Exit Roller
18. Lower Inverter Roller
19. Exit Sensor
20. Lower Junction Gate
21. Scanning Exit Roller
22. ARDF Transport Belt
23. ARDF Exposure Glass
24. Registration Sensor
25. Scanning Entrance Roller
26. Interval Sensor
27. 1st Transport Roller

Original Separation and Feed. The standard FRR system for paper separation and feed. (CT Handling Paper> Handling Originals> Document Feed> **FRR with Feed Belt**

Original Size Detection. The combinations of 3 original length sensors on the original tray and 5 original width sensors in the paper feed path are used to detect the size of originals. (CT Handling Paper> Handling Originals> Original Size Detection> **Dynamic Original Size Detection**)

Duplex Scanning. Two junction gates (16, 20) control the direction of the original in the paper path for duplex scanning. (☛6.4.10)

Detailed Descriptions

Downloaded from www.Manualslib.com manuals search engine

6.4.2 ARDF ELECTRICAL COMPONENTS

Components View 1: Sensors

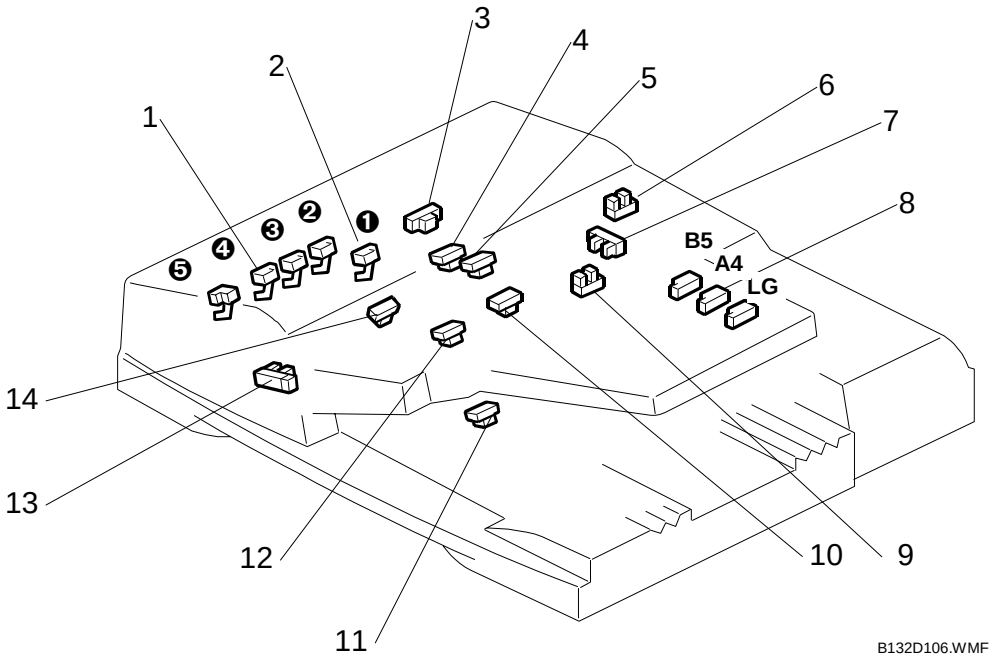

1. Original Width Sensors (❷ to ❺)
2. Original Width Sensor 1 (for B6 SEF)
3. Interval Sensor
4. Skew Correction Sensor
5. Separation Sensor
6. Feed Cover Open Sensor
7. Bottom Plate Position Sensor
8. Original Length Sensors (x3)
9. Original Set Sensor
10. Upper Inverter Sensor
11. Lower Inverter Sensor
12. Exit Sensor
13. Bottom Plate HP Sensor
14. Registration Sensor

Downloaded from www.Manualslib.com manuals search engine

Components View 2: Motors, Sensors, Other

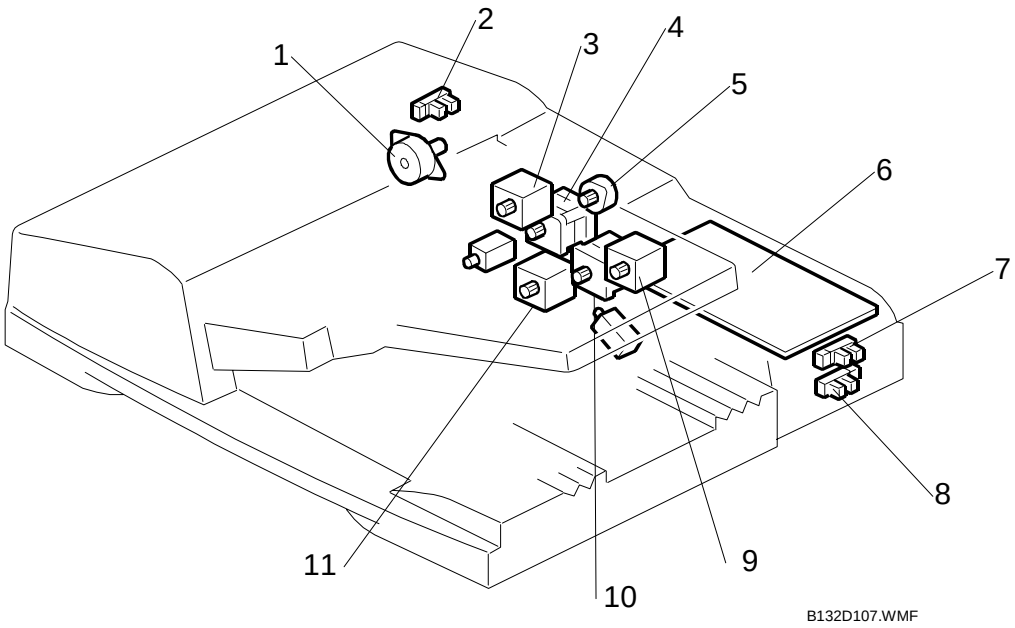

1. Pick-up Motor
2. Pick-up Roller HP Sensor
3. Exit Motor
4. Feed Motor
5. Bottom Plate Lift Motor
6. ARDF Main Board
7. ARDF Position Sensor
8. APS Start Sensor
9. Upper Inverter Motor
10. ARDF Transport Motor
11. Lower Inverter Motor

Downloaded from www.Manualslib.com manuals search engine

ARDF Components View 3: Drive Motors

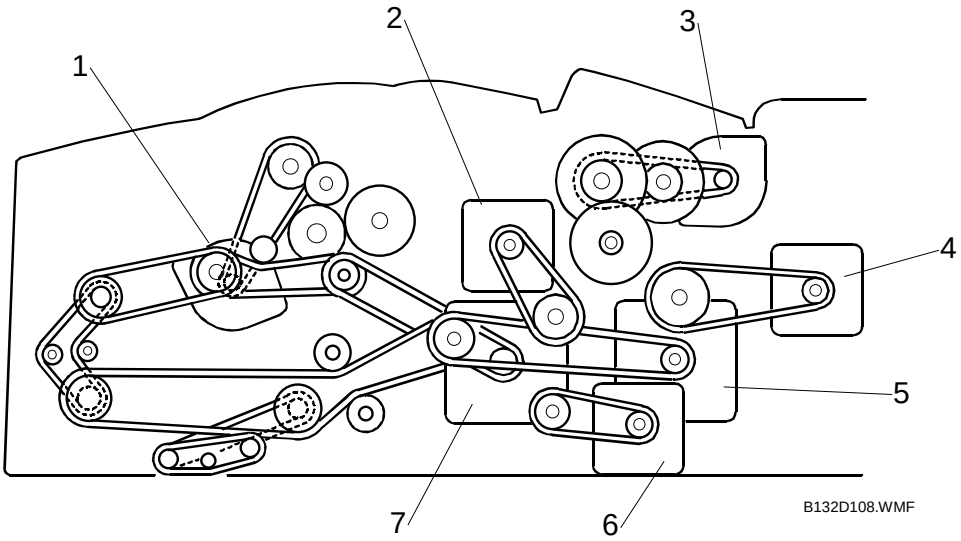

1. Pick-up Motor
2. Exit Motor
3. Bottom Plate Lift Motor
4. Upper Inverter Motor
5. ARDF Transport Motor
6. Lower Inverter Motor
7. Feed Motor

Downloaded from www.Manualslib.com manuals search engine

6.4.3 ORIGINAL SIZE DETECTION

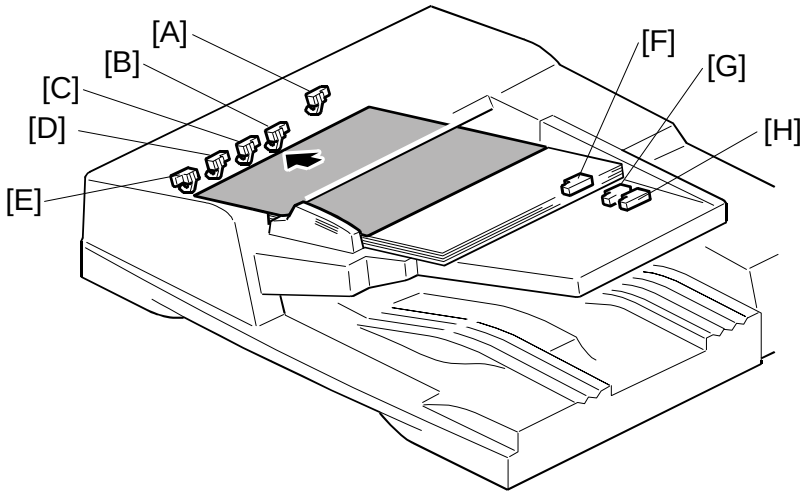

B132D110.WMF

The original size is detected by 5 width sensors and 3 length sensors.

When the leading edge of the paper passes the skew correction sensor, the CPU reads the outputs from the original width sensors.

[A]: Original width sensor 1
[B]: Original width sensor 2
[C]: Original width sensor 3
[D]: Original width sensor 4
[E]: Original width sensor 5
[F]: B5 length sensor
[G]: A4 length sensor
[H]: LG length sensor

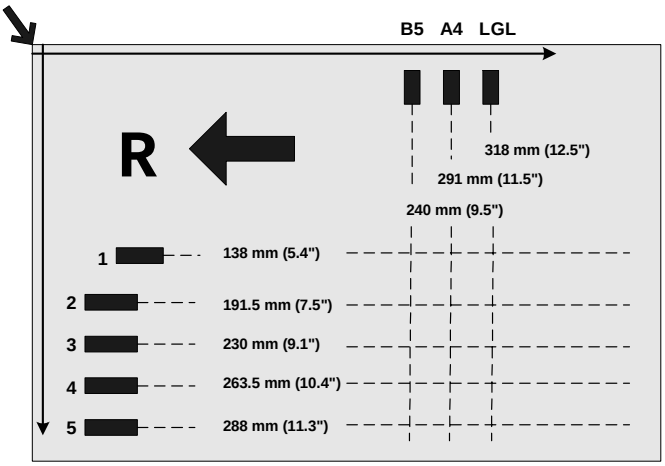

B132D971.WMF

Downloaded from www.Manualslib.com manuals search engine

Original Size Detection Table

Size (W x L)	Original Width Sensors					Original Length Sensors			Region	
	1	2	3	4	5	B5	A4	LG	NA	EU
A3 SEF (297 x 420 mm)	1	1	1	1	1	1	1	1	❍	❍
B4 SEF (257 x 364 mm)	1	1	1	0	0	1	1	1	x	❍
A4 SEF (210 x 297 mm)	1	1	0	0	0	1	1	0	❍	❍
A4 LEF (297 x 210 mm)	1	1	1	1	1	0	0	0	❍	❍
B5 SEF (182 x 257 mm)	1	0	0	0	0	1	0	0	x	❍
B5 LEF (257 x 182 mm)	1	1	1	0	0	0	0	0	x	❍
A5 SEF (148 x 210 mm) *1	1	0	0	0	0	0	0	0	x	❍
A5 LEF (210 x 148 mm)	1	1	0	0	0	0	0	0	x	❍
B6 SEF (128 x 182 mm) *1	0	0	0	0	0	0	0	0	x	❍
B6 LEF (182 x 128 mm) *1	1	0	0	0	0	0	0	0	x	❍
11" x 17" SEF (DLT)	1	1	1	1	–	1	1	1	❶	❺
11" x 15" SEF	1	1	1	1	–	1	1	1	❶	x
10" x 14" SEF	1	1	1	1	1	1	1	1	❍	❍
8 1/2" x 14" SEF (LG)	1	1	0	0	0	1	1	1	❹	x
8 1/2" x 13" SEF (F4)	1	1	0	0	0	1	1	1	❹	❍
8 1/4" x 13" SEF	1	1	0	0	0	1	1	1	(❹)	x
8" x 13" SEF (F)	1	1	0	0	0	1	1	1	(❹)	
8 1/2" x 11" SEF (LT)	1	1	0	0	0	1	0	0	❸	❻
11" x 8 1/2" LEF (LT)	1	1	1	1	0	0	0	0	❷	❼
7 1/4" x 10 1/2" SEF	1	1	0	0	0	1	0	0	❍	x
10 1/2" x 7 1/4" LEF	1	1	1	1	0	0	0	0	❷	x
8" x 10" SEF (F)	1	1	0	0	0	1	0	0	❸	x
5 1/2" x 8 1/2" SEF (HLT)	0	0	0	0	0	0	0	0	–	–
8 1/2" x 5 1/2" LEF (HLT)	1	1	0	0	0	0	0	0	❍	x
8 K SEF (267 x 390 mm)	1	1	1	1	0	1	1	1	x	❺
16 K SEF (195 x 267 mm)	1	1	0	0	0	1	0	0	x	❻
16 K LEF (267 x 195 mm)	1	1	1	1	0	0	0	0	x	❼

1: Actuated (ON)
0: Not actuated (OFF)
❍: Yes. Size detected.
x: No. Size not detected.
❶ NA: Detected paper size is set with Bit 0 of SP 6016
❷ NA: Detected paper size is set with Bit 1 of SP 6016
❸ NA: Detected paper size is set with Bit 2 of SP 6016
❹ NA: Detected paper size is set with Bit 3 of SP 6016. (❹): This size can be selected with SP 5126 (the default for this SP is F4).
❺ EU: Detected paper size is set with Bit 0 of SP 6016
❻ EU: Detected paper size is set with Bit 1 of SP 6016
❼ EU: Detected paper size is set with Bit 2 of SP 6016

Downloaded from www.Manualslib.com manuals search engine

Changing the Default Selection with SP6016 and SP5126

Some original sizes are almost the same. The machine cannot detect a difference between these sizes. Because of this, you can force the machine to detect one size or the other size with **SP6016**.

1. Enter the SP mode.
2. Select **SP6016**.

   On the screen you will see an 8-digit binary setting bar: **00000000**

   The default settings are all "0".

   In North America, the size recognition is changed with Bits 3 to 0 (other bits are ignored):

Bit7	Bit6	Bit5	Bit4	Bit3	Bit2	Bit1	Bit0
---	---	---	---	**0 = LG SEF**	**0 = LT SEF**	**0 = LT LEF**	**0 = DLT SEF**
---	---	---	---	1 = SP 5126 (default = F4 SEF)	1 = 8" x 10" SEF	1 = EXE LEF	1 = 11" x 15" SEF

   In Europe, the size recognition is changed with Bits 2 to 0 (other bits are ignored):

Bit7	Bit6	Bit5	Bit4	Bit3	Bit2	Bit1	Bit0
---	---	---	---	---	**0 = LT LEF**	**0 = LT SEF**	**0 = DLT SEF**
---	---	---	---	---	1 = 16 Kai LEF	1 = 16 Kai SEF	1 = 8 Kai SEF

Downloaded from www.Manualslib.com manuals search engine

6.4.4 PICK-UP ROLLER

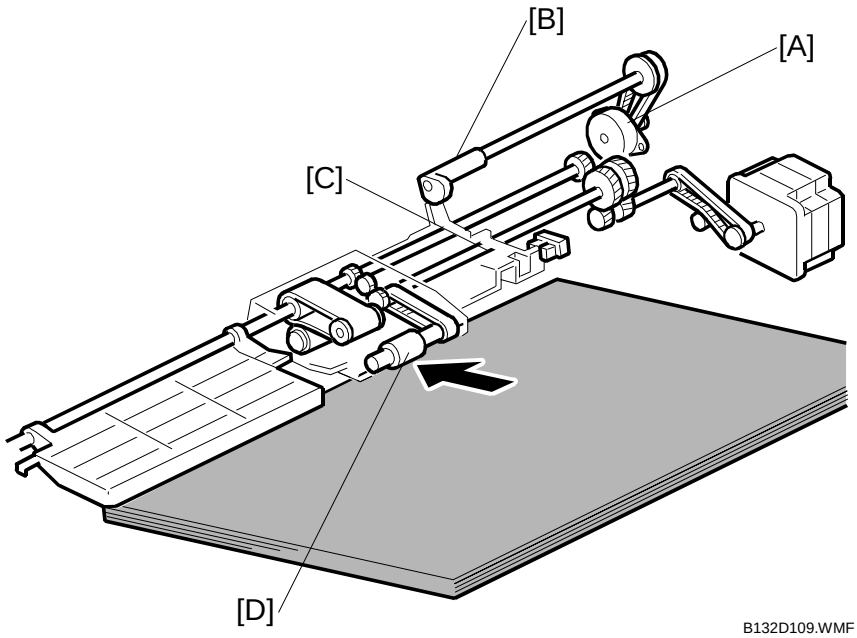

[A]: Pick-up roller lift motor
[B]: Cam
[C]: Pick-up roller release lever
[D]: Pick-up roller
[E]: Bottom plate position sensor

When there are no originals, the pick-up roller [D] stays up at the home position.

When an original is put on the tray:

- Original set sensor → On → Pick-up motor [A] → On.
- Cam [B] releases lever [C] then pick-up roller [D] drops onto the paper.
- Pick-up roller [D] feeds an original → feed belt and separation roller.

The pick-up roller lowers when:

- An original is put on the tray.
- The trailing edge of the original passes the skew correction sensor, if there are originals in the ARDF entrance for scanning.

The pick-up roller rises when:

- The leading edge of the original passes the skew correction sensor
- Power is turned on
- The feed cover is opened
- An original jam occurs

Downloaded from www.Manualslib.com manuals search engine

6.4.5 BOTTOM PLATE LIFT

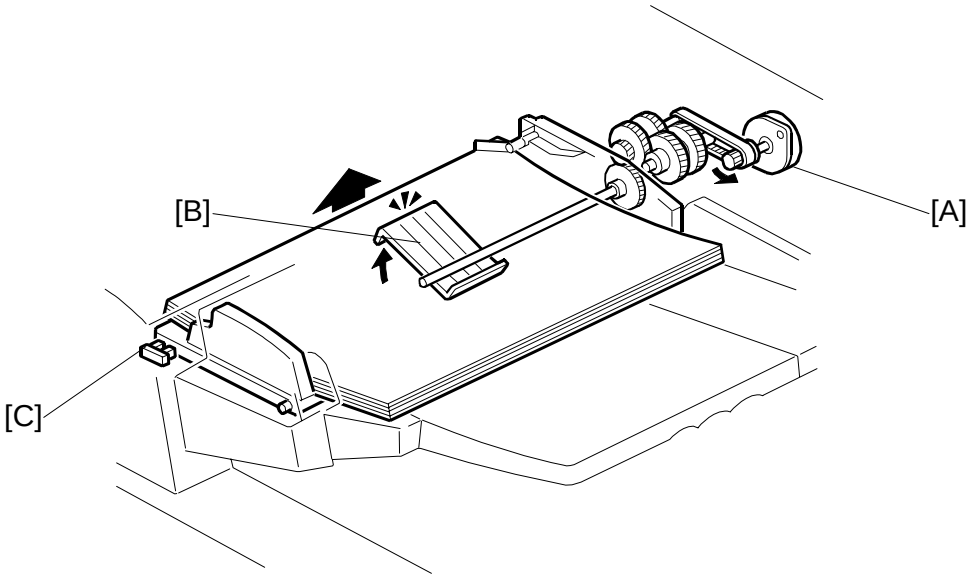

B132D111.WMF

[A]: Bottom plate lift motor
[B]: Lift lever
[C]: Bottom plate HP sensor

When an original is placed on the original tray:

- Original set sensor → On → pick-up roller drops
- Bottom plate position sensor ([E] on the previous page) → Off.
- Motor [A] lifts lever [B] and raises the bottom plate.

When the bottom plate reaches the correct feed height for feeding:

- Bottom plate position sensor ([E] on the previous page) → On → Stops bottom plate lift.
- Motor [A] stops

During original feeding:

- Pick-up roller descends as the top of the stack lowers
- The descended pick-up roller → bottom plate position sensor ([E] on the previous page) → Off
- Bottom plate lift motor [A] → On → motor [A] raises the stack to the correct height for feeding
- Bottom plate position sensor ([E] on the previous page) → On
- Bottom plate lift motor [A] stops

Downloaded from www.Manualslib.com manuals search engine

6.4.6 ORIGINAL FEED AND SEPARATION

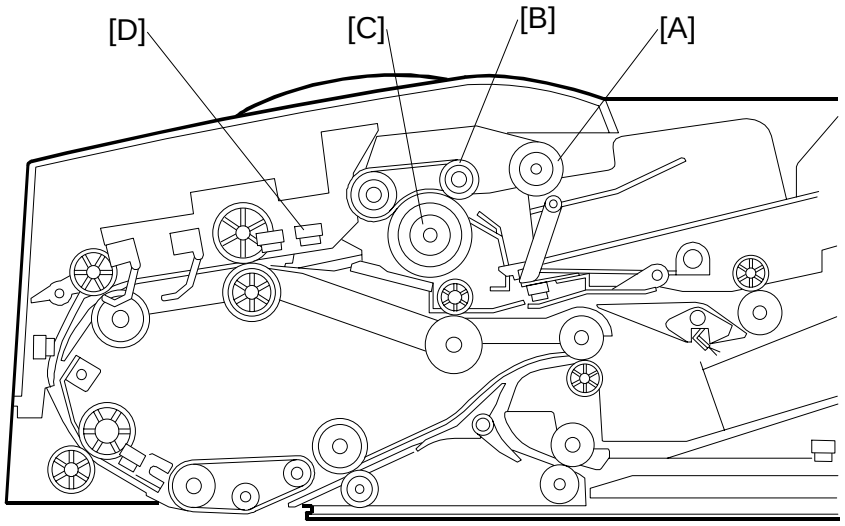

B132D120.WMF

[A]: Pick-up roller
[B]: Feed belt
[C]: Separation roller
[D]: Separation sensor

Because of this mechanism, the machine does not feed more than one sheet at a time.

(CT Handling Paper> Handling Originals> Document Feed> **FRR with Feed Belt)**

Downloaded from www.Manualslib.com manuals search engine

6.4.7 ORIGINAL FEED AND SKEW CORRECTION

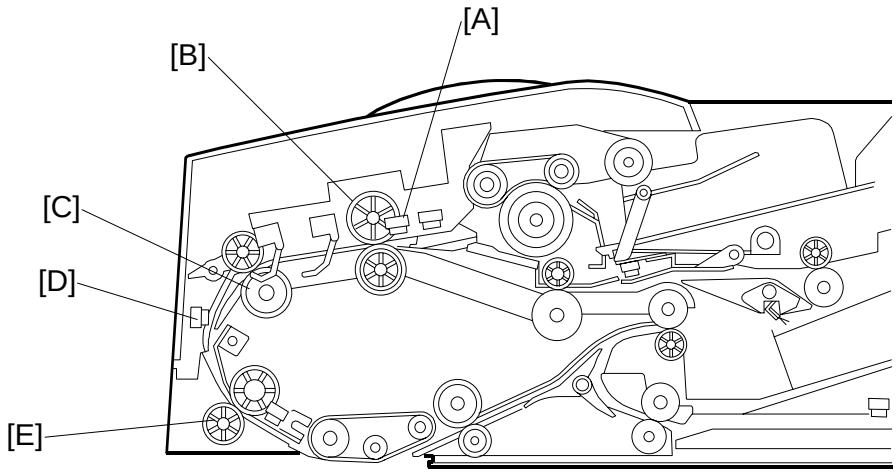

B132D120.WMF

[A]: Skew correction sensor
[B]: Entrance roller
[C]: Feed roller (Transport Roller 1)
[D]: Interval sensor
[E]: Scanning entrance roller

After pick-up and separation:

- Skew correction sensor [A] detects the leading edge of the original
- The detection signal stops the entrance roller [B] for a set number of pulses to buckle the original and correct skew.

If the originals are small (B6, A5, or HLT) (because small sizes skew easily), and during duplex scanning for all original sizes:

- Interval sensor [D] detects the leading edge of the original
- Scanning entrance roller [E] is stopped for the set number of pulses to buckle the original and correct skew.

Important

- The roller [E] stops when B6, A5, or HLT paper is fed.
- However, you can use **SP6020** to make the roller stop for other paper sizes to correct skew at this position.

Downloaded from www.Manualslib.com manuals search engine

6.4.8 SLIP DETECTION

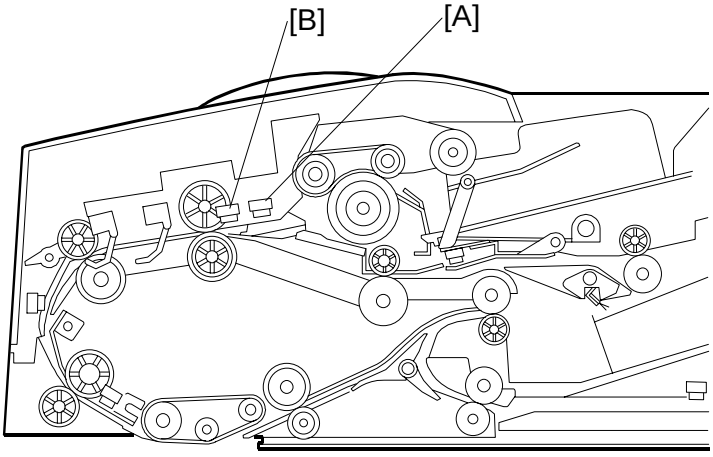

B132D120.WMF

[A]: Separation sensor
[B]: Skew correction sensor

These two sensors are used to measure the amount of slippage and to correct for this.

The machine measures the time it takes for the original to get to the separation sensor [A] after the [Start] key is pressed.

- If the original arrives at the correct time, it feeds normally.
- If the original arrives late, the machine enters the slip mode.

In the slip mode, the machine measures the time for the leading edge of the original to move from the separation sensor to the skew correction sensor [B].

The machine uses this time to adjust the length of time that the entrance roller stays off to correct skew. This stops feed for enough time for the original to be in the correct position for feeding.

Downloaded from www.Manualslib.com manuals search engine

6.4.9 ORIGINAL TRANSPORT (ONE-SIDED)

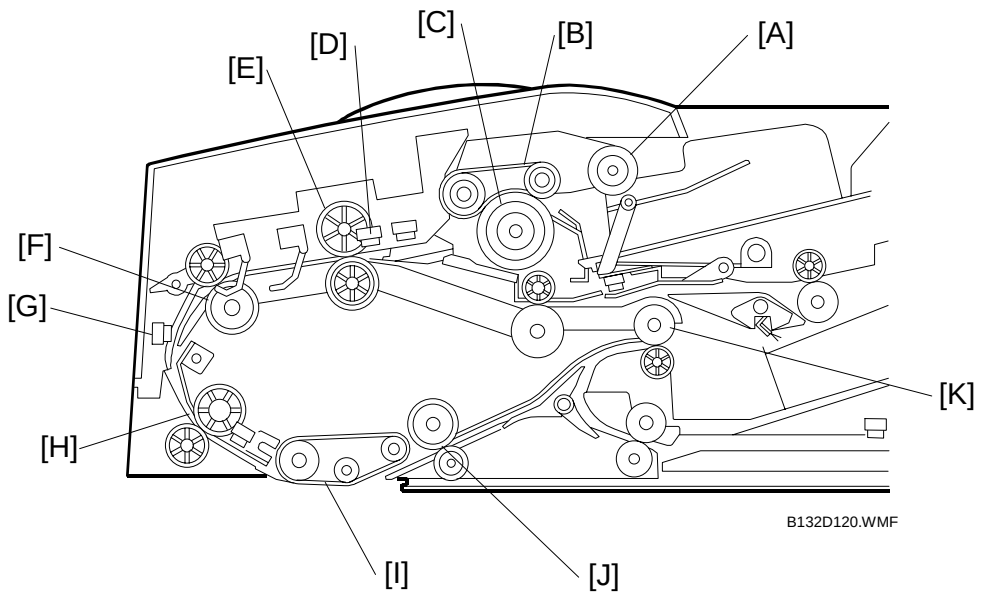

The pick-up roller [A] feeds the original to the feed belt [B] and separation roller [C].

When the skew correction sensor [D] detects the leading edge of the original, it stops the feed motor for a set number of pulses to stop the entrance roller [E]. This buckles the leading edge of the original against the entrance roller to correct skew.

The feed motor increases the speed of 1st transport roller [F] to feed the paper faster and reduce the interval between the original that was just fed and the original ahead that is now being scanned.

When the interval sensor [G] detects the leading edge of the original approaching the scanning entrance roller [H], it slows the rotation of the scanning entrance roller [H]. To this point the rate of feed is high. The interval sensor slows the paper so it does not collide with the trailing edge of the paper ahead of it in the paper path.

Next, the transport belt [I] pulls the original across the ARDF scanning glass.

The 2nd transport roller [J] feeds the paper to the exit rollers [K]. The exit rollers feed to paper out onto the original exit table.

Downloaded from www.Manualslib.com manuals search engine

6.4.10 DUPLEX SCANNING

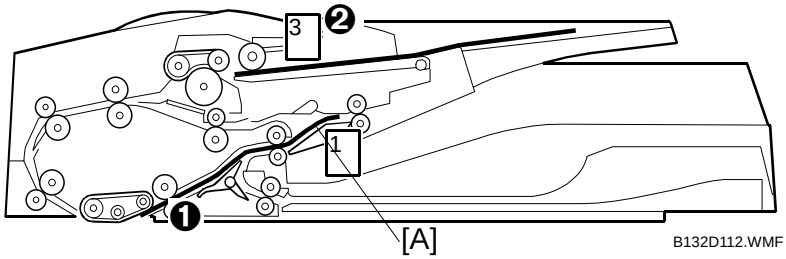

1. Side 1 of original ❶ is scanned, original ❷ waits. Upper junction gate [A] opens and sends ❶ to the upper inverter rollers.

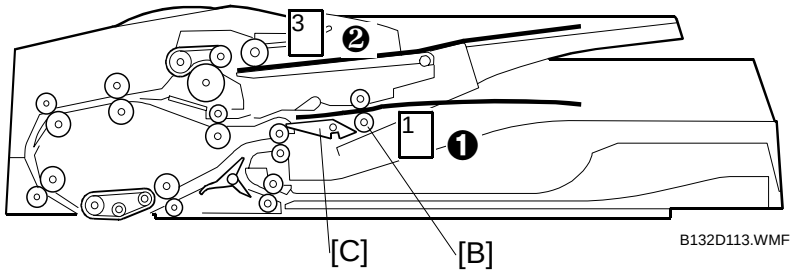

2. Original ❶ feeds past the upper inverter rollers [B] and stops. Upper inverter junction gate [C] closes. The upper inverter rollers reverse and feed the original ❶ into the feed path.

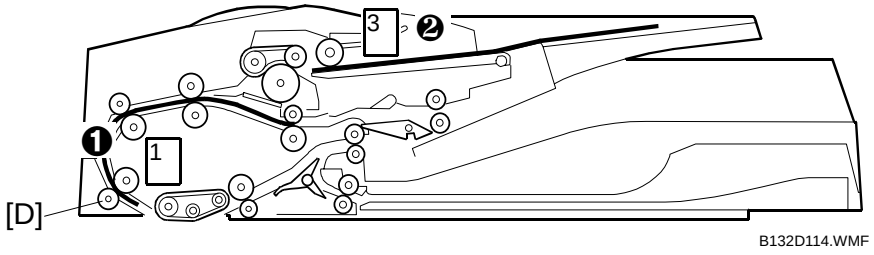

3. Original ❶ feeds to rollers [D], where skew is corrected. (☛6.4.7) Skew is corrected only for small paper sizes (B6, A5, HLT). Other sizes can be selected for this function with **SP6020**.

Downloaded from www.Manualslib.com manuals search engine

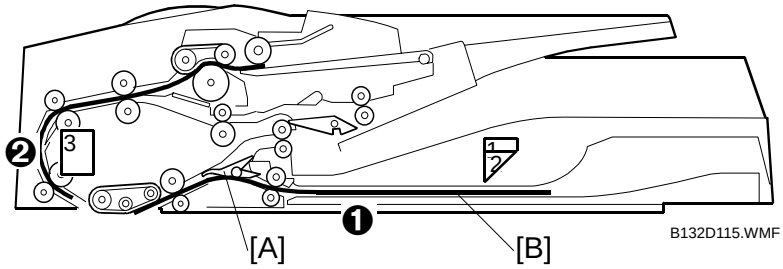

4. Side 2 of original ❶ is scanned, lower inverter junction gate [A] opens and directs ❶ to lower inverter table [B]. Original ❷ feeds.

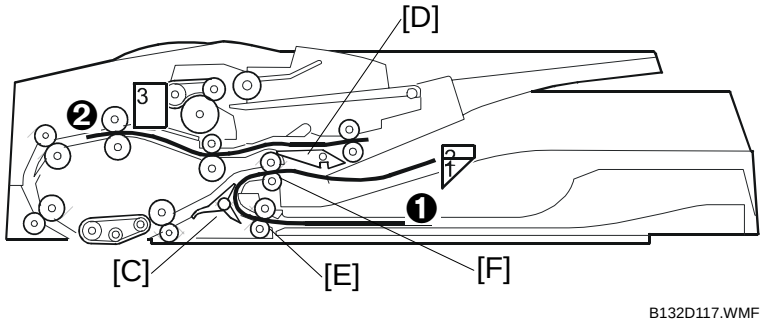

5. Steps 1, 2, 3 repeat for original ❷. Lower inverter junction gate [C] and upper inverter junction gate [D] remain closed. Lower inverter rollers [E] feed original ❶ to exit rollers [F]

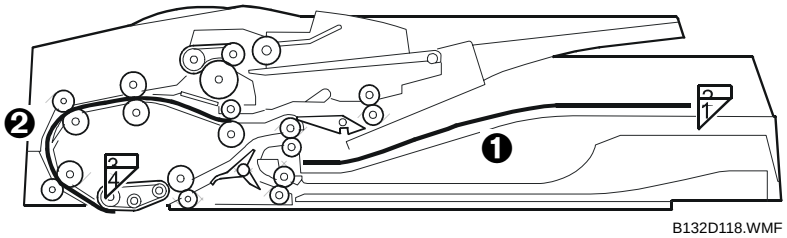

6. The exit rollers feed original ❶ to the original exit tray. Original ❷ is corrected for skew and is scanned. Skew is corrected only for small paper sizes (B6, A5, HLT). Other sizes can be selected for this function with **SP6020**.

Downloaded from www.Manualslib.com manuals search engine

6.4.11 ARDF JAM DETECTION

Jam Detection Sensor Layout

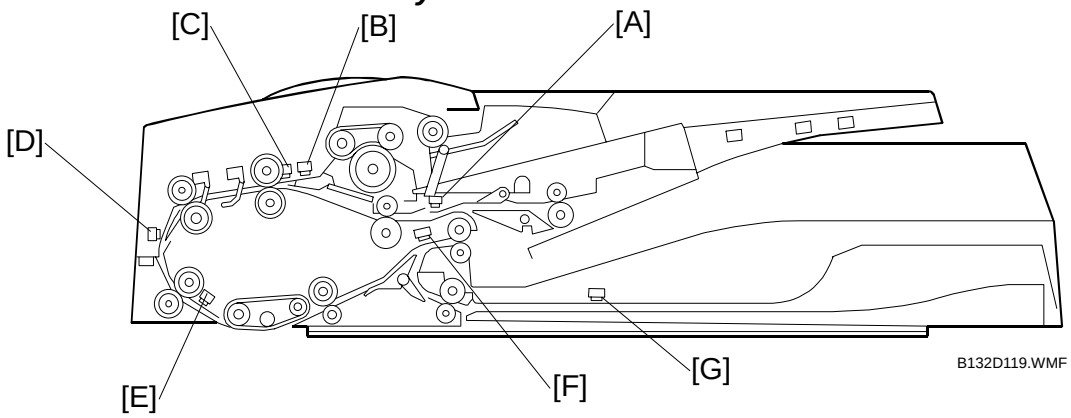

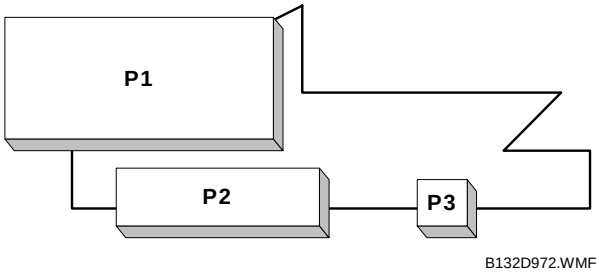

Seven sensors detect jams in the original path at **P1**, **P2**, and **P3** (These notations appear on the operation panel display when a jam occurs):

[A]: Upper Inverter Sensor
[B]: Separation Sensor
[C]: Skew Correction Sensor
[D]: Interval Sensor
[E]: Registration Sensor
[F]: Exit Sensor
[G]: Lower Inverter Sensor

Downloaded from www.Manualslib.com manuals search engine

Jam Detection Table

The following notations are used in the table below:

- **Orig. late**: Leading edge not detected. The original fails to arrive at the sensor site at the correct time.
- **Orig. lag**: Trailing edge not detected. The original fails to leave the sensor site at the correct time.

Area	Sensor	Jam Type
P1	Separation sensor	Orig. late
	Skew correction sensor	Orig. late
	Interval sensor	Orig. late
	Upper inverter sensor	Orig. late
	Registration sensor	Orig. late
	Skew correction sensor	Orig. lag
	Interval sensor	Orig. lag
	Upper inverter sensor	Orig. lag
P2	Exit sensor	Orig. late
	Lower inverter sensor	Orig. late
	Registration sensor	Orig. lag
	Exit sensor	Orig. lag
P3	Lower inverter sensor	Orig. lag

If a problem occurs in the ARDF, either SC701 or SC705 will be issued. For details on SCs, please refer to Section 4 of this manual.

Downloaded from www.Manualslib.com manuals search engine

6.5 SCANNER UNIT

6.5.1 OVERVIEW

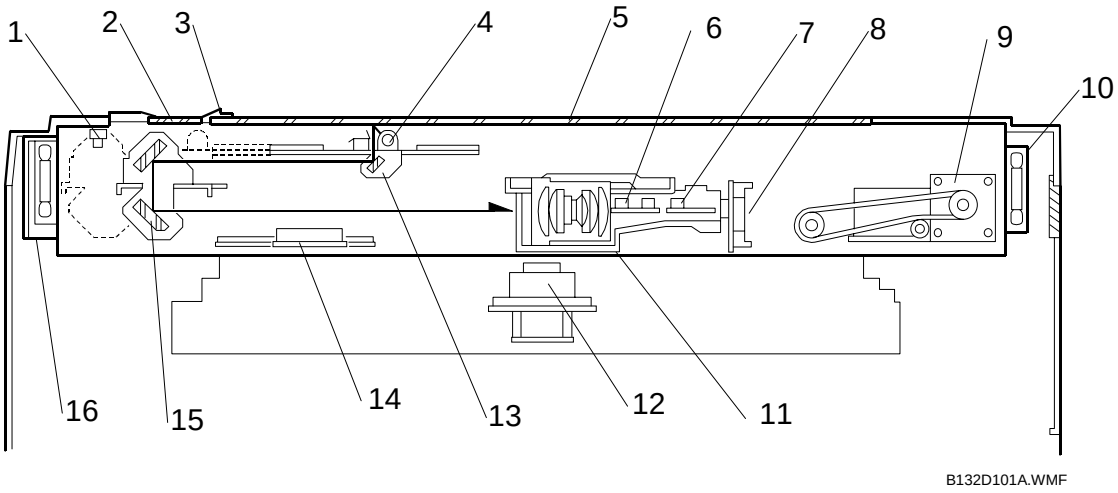

1. Scanner HP Sensor
2. ARDF Exposure Glass
3. White Plate
4. Exposure Lamp (Xenon)
5. Exposure Glass
6. APS2 (Org. Length Sensors 1, 2)
7. APS3 (Org. Length Sensor 3)
8. SBU (CCD: 600 dpi)
9. Scanner Motor
10. Scanner Fan Motor - Right
11. Lens Block
12. Polygon Motor
13. 1st Scanner
14. APS1 (Org. Width Sensors 1, 2)
15. 2nd Scanner
16. Scanner Fan Motor - Left

The light reflected from the original is sent to the CCD:

1st Mirror> 2nd Mirror> 3rd Mirror> Lens Block> CCD

The lens block consists of the scanner lens and SBU (CCD).

The CCD converts the light that was reflected from the original and converts it to three color analog signals (R, G, B).

The SBU converts the analog signals to digital signals, then sends the digital signals to the BICU.

NOTE: The lens block is replaced as a unit and requires no adjustment in the field.

Downloaded from www.Manualslib.com manuals search engine

6.5.2 ORIGINAL SIZE DETECTION

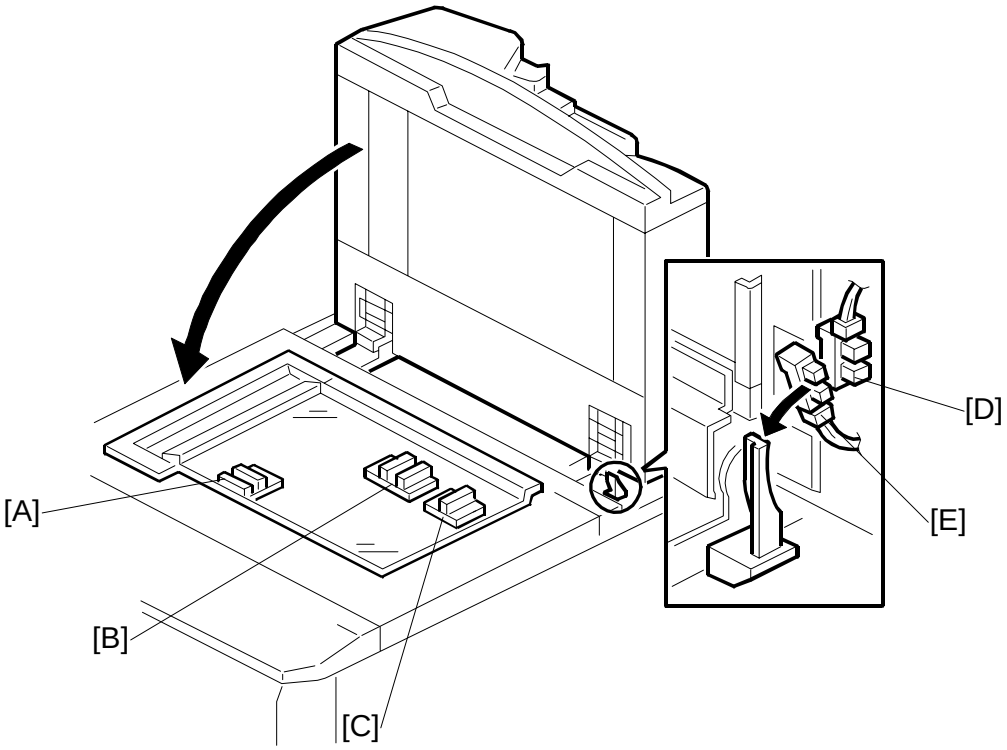

B132D102.WMF

The machine uses five sensors on three APS boards to detect the size of the original on the exposure glass.

[A]: APS1. (W1 and W2) detects original width
[B]: APS2. (L1 and L2) detects original length
[C]: APS3. (L3) detects original length
[D]: ARDF position sensor. Detects whether the ARDF is open or closed.
[E]: APS start sensor. Triggers automatic paper size detection.

Downloaded from www.Manualslib.com manuals search engine

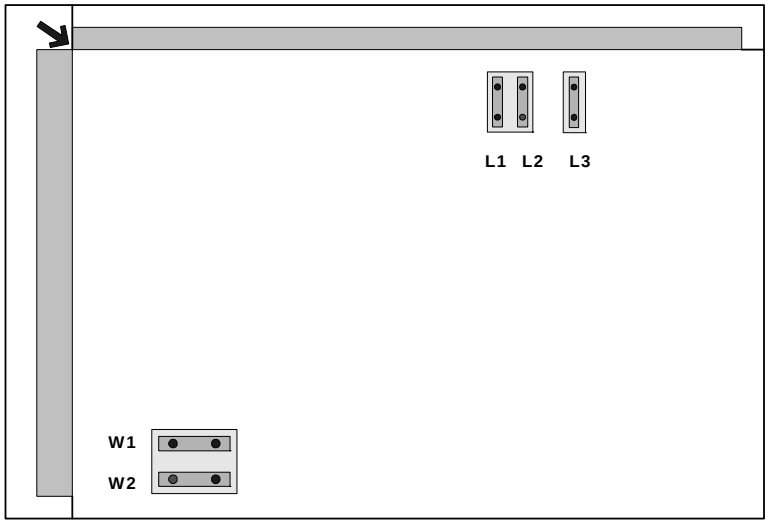

B132D973.WMF

The table shows the sensor output for each paper size.

If an original is on the exposure glass, you can check the sensor output with **SP4301** (APS Confirm).

A4/A3	LT/DLT	L3	L2	L1	W1	W2	SP4301 Display
A3	11" x 17"	1	1	1	1	1	000 11111
B4	—	1	1	1	1	0	000 11110
A4 SEF	8 1/2" x 11"	0	1	1	0	0	000 01100
—	8½ x 14"	1	1	1	0	0	000 11100
A4 LEF	11" x 8 1/2"	0	0	0	1	1	000 00011
B5 SEF	—	0	0	1	0	0	000 00100
B5 LEF	—	0	0	0	1	0	000 00010
A5 SEF	5 1/2" x 8 1/2"	0	0	0	0	0	000 00000
A5 LEF	8 1/2" x 5 1/2"	0	0	0	0	0	000 00000

1: On (Paper Detected), 0: Off (Paper Not Detected)

NOTE: If the original is small (such as A5-LEF), all sensors are off and the machine shows that the original size cannot be detected. However, you can force the machine to detect A5/HLT in this situation if you adjust **SP4303** (there are settings for A5/HLT SEF and A5/HLT LEF).

Downloaded from www.Manualslib.com manuals search engine

Detection Timing

When the power is on, the APS sensors are always active, but the CPU checks their signals only after the platen is lowered.

Book Mode

In the Book mode (when the ARDF is open), the CPU checks the APS sensors and determines the original size after [Start] is pressed.

ARDF Mode

The CPU checks the APS sensors after the platen is lowered.

Bypass Mode

The APS sensors are ignored when copy paper is fed from the bypass tray, but the bypass tray can handle a variety of sizes and orientations. To accomplish this:

- The machine always assumes short-edge feed for paper on the bypass tray.
- Width is measured by a sensor inside the bypass tray.
- The bypass tray cannot measure length, so the registration sensor determines the length of the paper using clock pulses.

Downloaded from www.Manualslib.com manuals search engine

6.5.3 SCANNER DRIVE

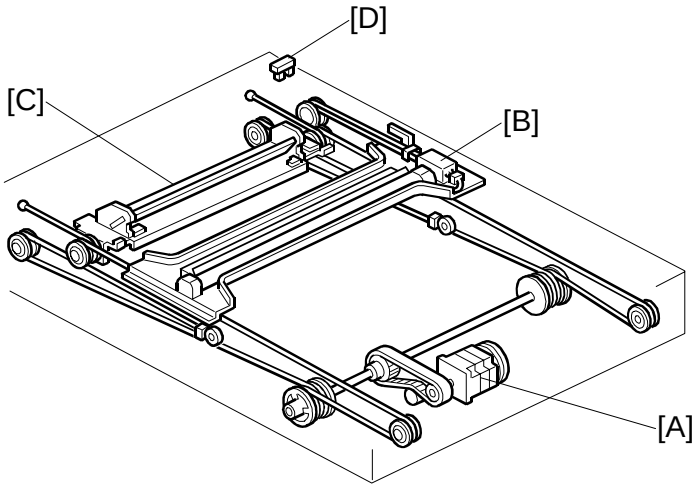

B132D103.WMF

[A]: Scanner motor (a dc stepper motor) drives the 1st and 2nd scanner with wires and pulleys.
[B]: 1st scanner
[C]: 2nd scanner
[D]: Scanner HP sensor. Stops and reverses the scanner motor when the scanner reaches the home position. The machine measures distance from home position by counting scanner motor pulses.

Downloaded from www.Manualslib.com manuals search engine

6.5.4 SCANNER UNIT FANS AND ANTI-CONDENSATION HEATER

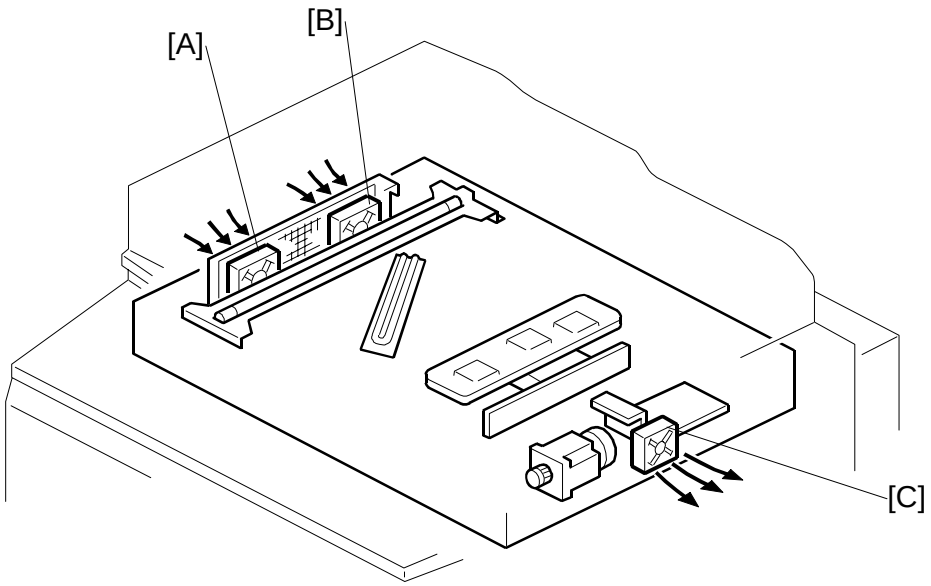

B132D104.WMF

[A]: Scanner cooling fan (front)
[B]: Scanner cooling fan (rear)
[C]: Scanner exhaust fan

Condensation on the mirrors can cause:

- Running, smearing and image borders
- Printing completely black or gray pages

Fans

- The scanner cooling fans (front, rear) pull cool air into the scanner unit.
- The scanner exhaust fan expels hot air from the scanner unit

Detailed Descriptions

Downloaded from www.Manualslib.com manuals search engine

6.5.5 DUST DETECTION

Overview

When an original is put on the original feed table of the ARDF, the ARDF exposure glass is checked for dust.

The dust check is done before the first original is scanned. This is done only once at the beginning of a job. The check is not done for originals added during a long scanning job.

The ARDF transport belt turns with no paper fed across the ARDF scanning glass. The surface (white) of the ARDF transport belt is scanned. The IPU checks if dust is present.

- If dust is detected, the scanner carriage position for ARDF scanning is moved by 0.7 mm.
- The next time that dust is detected, the scanning position is moved again by 0.7 mm.
- The third time that dust is detected, the scanning position is not moved. An alert message is displayed but the job does not stop.
- Then, at the start of the next job, the procedure starts again, but the scanner does not go back to home position.

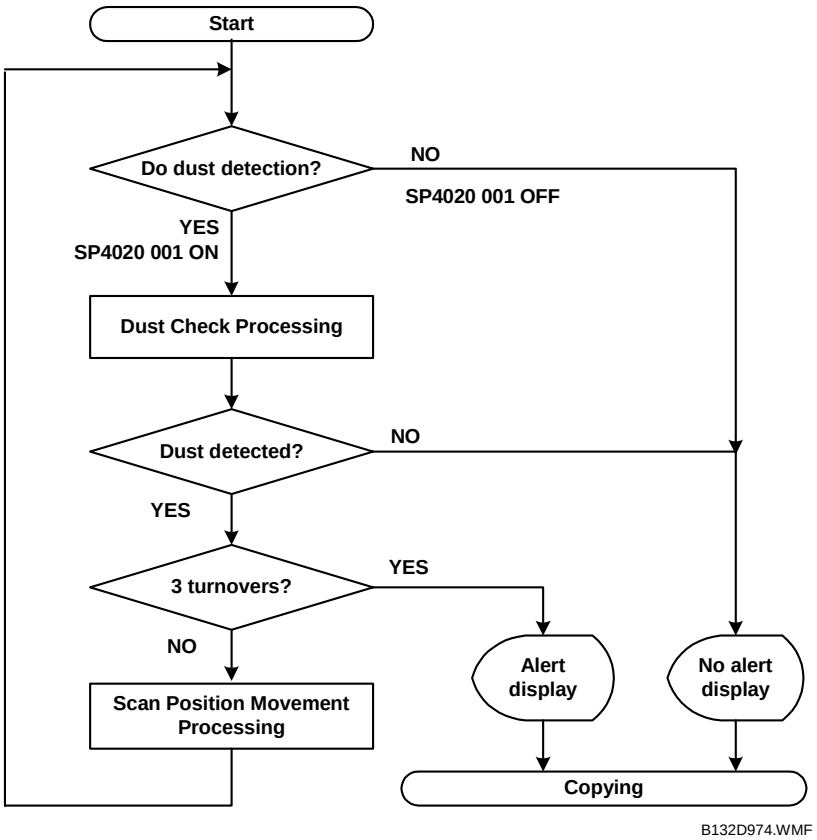

Downloaded from www.Manualslib.com manuals search engine

What Happens if Dust is Detected?

If dust is detected, the position where the scanner stops below the ARDF exposure glass to scan the original is moved by 0.7 mm.

The scanning position can be shifted two times in 0.7 mm increments, towards the scanning reference point at the upper left corner of the exposure glass.

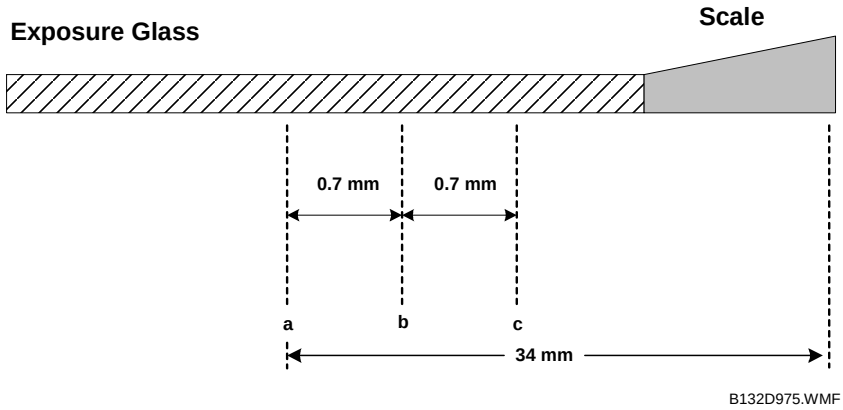

Home Position	**a**
From Book Read Position:	34 mm
Shift Direction:	**a → b → c**

If dust is detected after the scanner has been moved two times, an alert is displayed, but the job does not stop.

Then, at the start of the next job, the scanner stays at position (c). But if dust is detected at (c), the scanner goes back to home position (a) and the dust detection process starts again.

Downloaded from www.Manualslib.com manuals search engine

How is the Dust Detected?

To detect dust on the ARDF exposure glass, the ARDF transport belt turns and the CCD scans this belt.

The ARDF transport belt has four grooves cut across it in the main scan direction.

These grooves are recessed. Because of this, they are not easily contaminated with dust, and they are used as reference points during dust detection. Another part of the belt could have dust on it, and give an incorrect reference.

NOTE: The illustration shows the belt if it were a perfect circle.

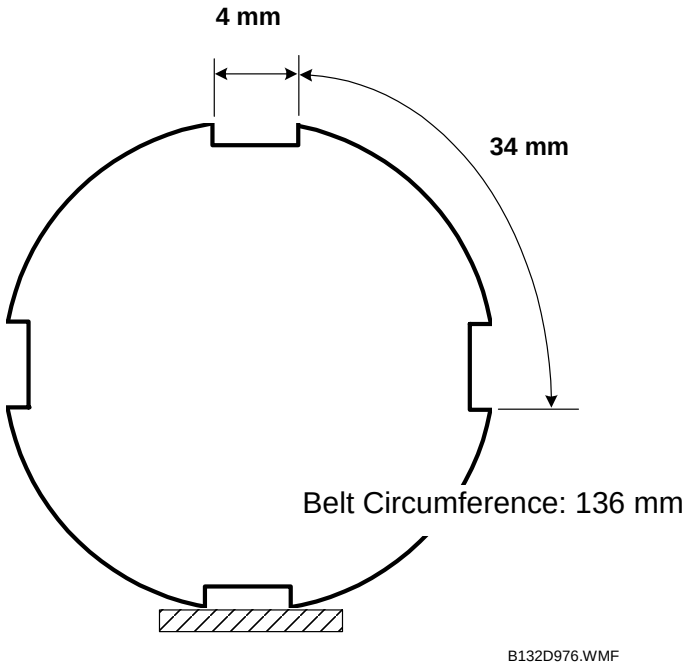

To detect dust, the belt turns one time. The IPU (through the CCD) checks for dust. If a dark spot is detected for 96% of this rotation, the IPU determines that dust is present on the ARDF exposure glass.

Downloaded from www.Manualslib.com manuals search engine

The Effects of SP Mode Settings on Dust Detection

The settings of some SP codes control how dust detection is done.

- **SP4020 001**. Switches the dust warning on and off (default: off). When this SP is on, a warning is issued if the check detects dust on the ARDF exposure glass or the white plate above the exposure glass. Always clean the ARDF exposure glass and white plate before turning this SP on.
- **SP4020 002**. Adjusts the sensitivity of the check. If you see black streaks in copies when no warning has been issued, raise the setting to increase the level of sensitivity. If warnings are issued when you see no black streaks in copies, lower the setting.
- **SP4020 003**. Sets the level for vertical line correction caused by dust. A high setting can eliminate unwanted vertical lines caused by dust but it can also thin vertical lines of the original.
- **SP7852**. Displays the count for the number of times the machine has detected dust on the ARDF exposure glass at the beginning of copy jobs. This SP operates only after **SP4020 001** has been turned on.

NOTE: Dust that triggers a warning could be removed from the glass by the originals in the feed path. If the dust is removed by passing originals, this is not detected and the warning remains on.

Downloaded from www.Manualslib.com manuals search engine

6.6 IMAGE PROCESSING

6.6.1 OVERVIEW

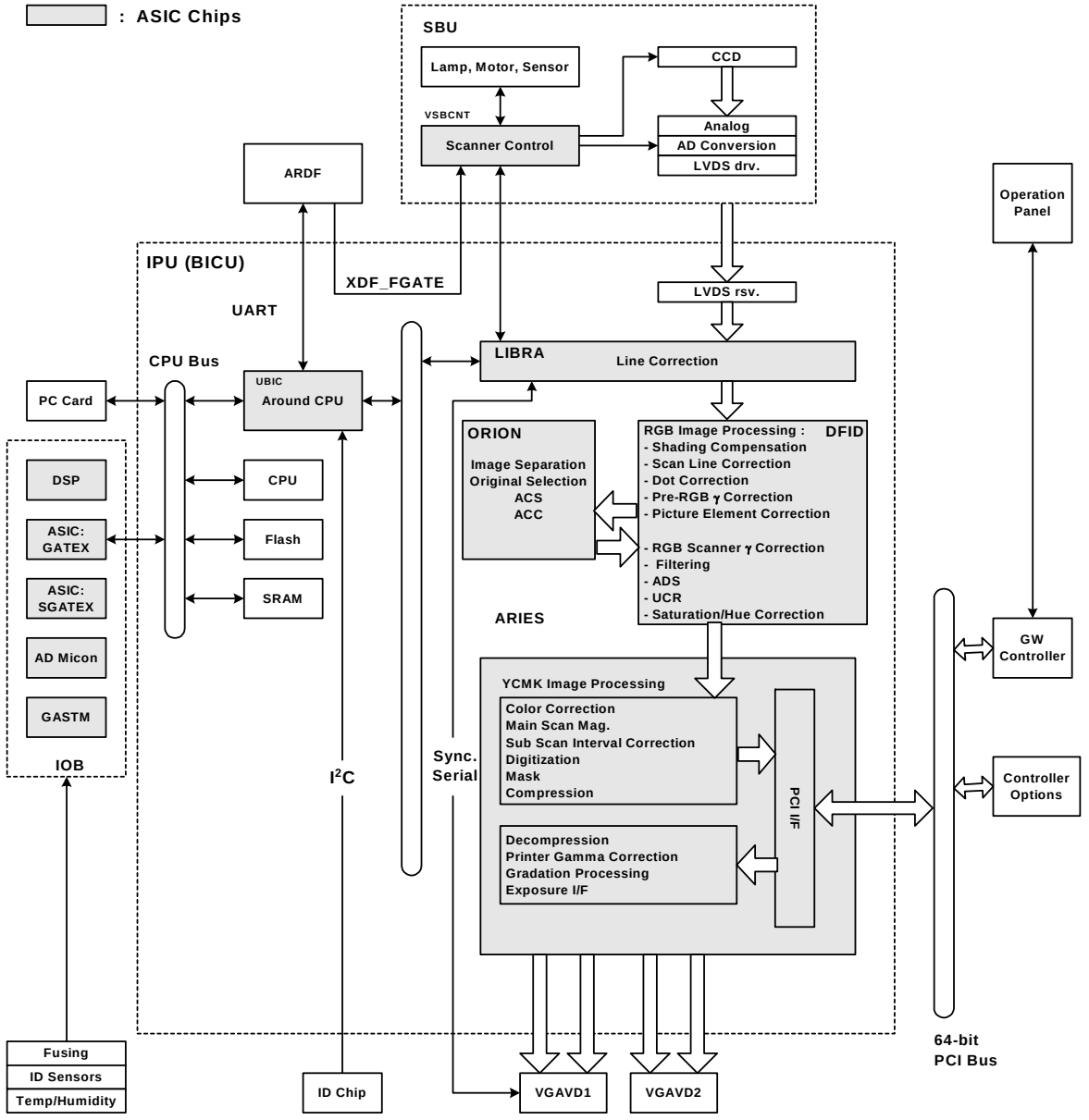

B132D982.WMF

Downloaded from www.Manualslib.com manuals search engine

6.6.2 SBU (SENSOR BOARD UNIT)

SBU

The VPU (Video Processor Unit) does the following functions:

- Black level correction
- White level correction
- Gradation calibration
- ADS control (Background Density) (*ADS: Auto image Density Selection)
- Creating the SBU test pattern

Operation Summary

The signals from the 3-line CCD, one line for each color (R, G, B) and 2 analog signals per line (ODD, EVEN), are sampled by the ASIC and converted to digital signals in the 10-bit A/D converter. This is the first phase of processing the data scanned from the original.

Storing Operation Settings

The controller stores the SBU settings. These values must be restored after the lens block is replaced:

SP4008 001	Sub Scan Mag	Sub Scan Magnification Adjustment
SP4010 001	Sub Scan Reg	Sub Scan Registration Adjustment
SP4011 001	Main Scan Reg	Main Scan Registration Adjustment

Also, before lens block replacement, enter the SP mode and note the settings of **SP4800 001** to **003** (ARDF density adjustments for R, G, B). After lens block replacement, do some copy samples with the ARDF, then check the copies. If the copies have background, change **SP4800 001** to **003** to their previous settings, or adjust until the background is acceptable. These SP codes are also used to adjust the ARDF scanning density, if the scanning densities of the ARDF and the platen mode are not the same.

SBU Test Mode

There are two SP codes to create a test pattern which can be used as a diagnostic tool to troubleshoot problems in the SBU:

- **SP4907 001** SBU Pattern - Test Pattern
- **SP4907 002** SBU Pattern - Select Fixed Pattern

To print the pattern:

- Select the pattern to print.
- Touch "Copy Window" then press the Start key twice.

Downloaded from www.Manualslib.com manuals search engine

6.6.3 IPU (IMAGE PROCESSING UNIT)

The IPU does the following:

- Controls the scanner
- Processes the image signals from the SBU and sends them over the PCI bus to the controller memory
- Receives the image processing signals sent over the PCI bus from the controller memory, processes them, then outputs them to the VGAVD.
- Outputs the control signals for the ARDF
- Controls the relay of power and signals

Image processing, ADS (Auto image Density Selection) correction, and line width correction are done on the BICU board for all the digital data sent from the SBU. Finally, the processed data is sent to the printer as digital signals (2 bits/pixel).

Downloaded from www.Manualslib.com manuals search engine

6.7 LASER UNIT

6.7.1 OVERVIEW

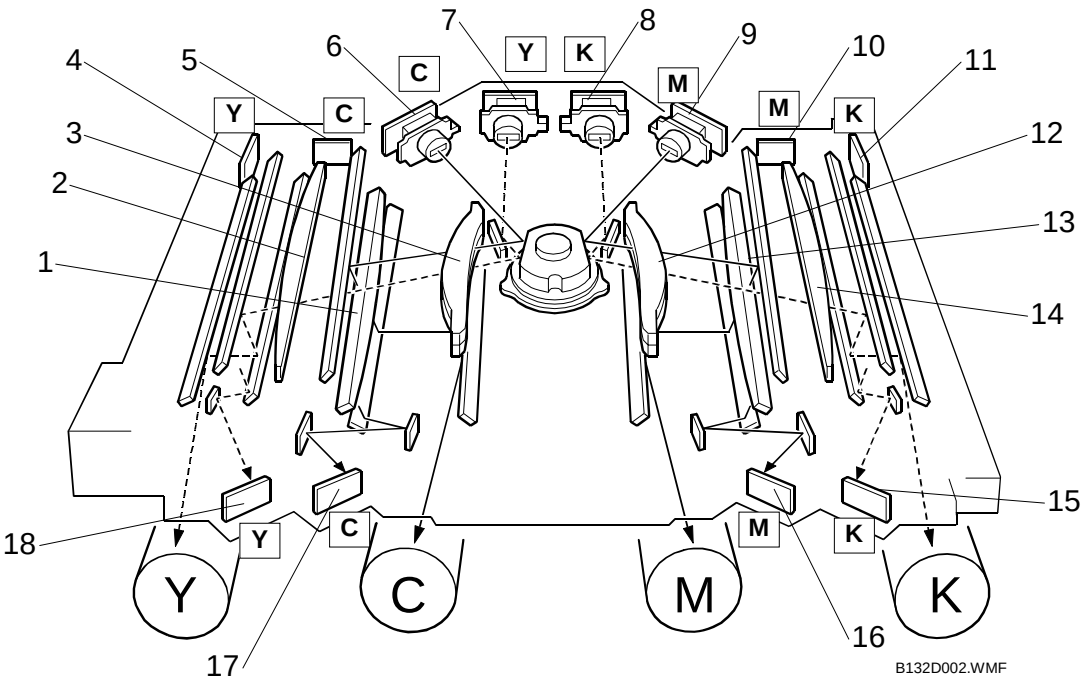

NOTE: LSDB = Laser Synchronization Detection Board

1. WTL Lens (C)
2. WTL Lens (Y)
3. Dual-Layer fθ Lens (C, Y)
4. LSDB (Y Front)
5. LSDB (C Front)
6. LD Unit (C)
7. LD Unit (Y)
8. LD Unit (K)
9. LD Unit (M)
10. LSDB (M Rear)
11. LSDB (K Rear)
12. Dual-Layer fθ Lens (M, K)
13. WTL Lens (M)
14. WTL Lens (K)
15. LSDB (K Front)
16. LSDB (M Front)
17. LSDB (C Rear)
18. LSDB (Y Rear)

LD Units	4, One two-beam LD unit for each color (C, M, Y, K)
Line Scan Mechanism	Main scanning with polygon mirror
Image Position Correction	MUSIC sensor patterns read from ITB with MUSIC sensors

Detailed Descriptions

Downloaded from www.Manualslib.com manuals search engine

6.7.2 LD UNIT

There is an LD unit for each color, and each LD unit uses a two-beam system. A photo diode (PD) in each LD unit detects the light emitted from the LD unit. The output of the PD is fed back to the LD control board. The LD control board uses this information to control the amount of light to make sure that it remains at the correct level.

Dual Beam Writing

In each LD unit, two beams move across the drum in the main scan direction.

The use of two beams does the following:

- Lets the machine print quickly
- Reduces the number of turns of the polygon mirror for a page, which gives the motor a longer life.
- Reduces the amount of noise from the motor.

The beam pitch is fixed at 600 dpi and is not adjustable.

LD Safety Switches

To ensure the safety of customers and service engineers, two switches inside the cover prevent the laser beams from switching on accidentally. When the front door is open, the 5V line connecting each LD driver on the LD control board is disconnected.

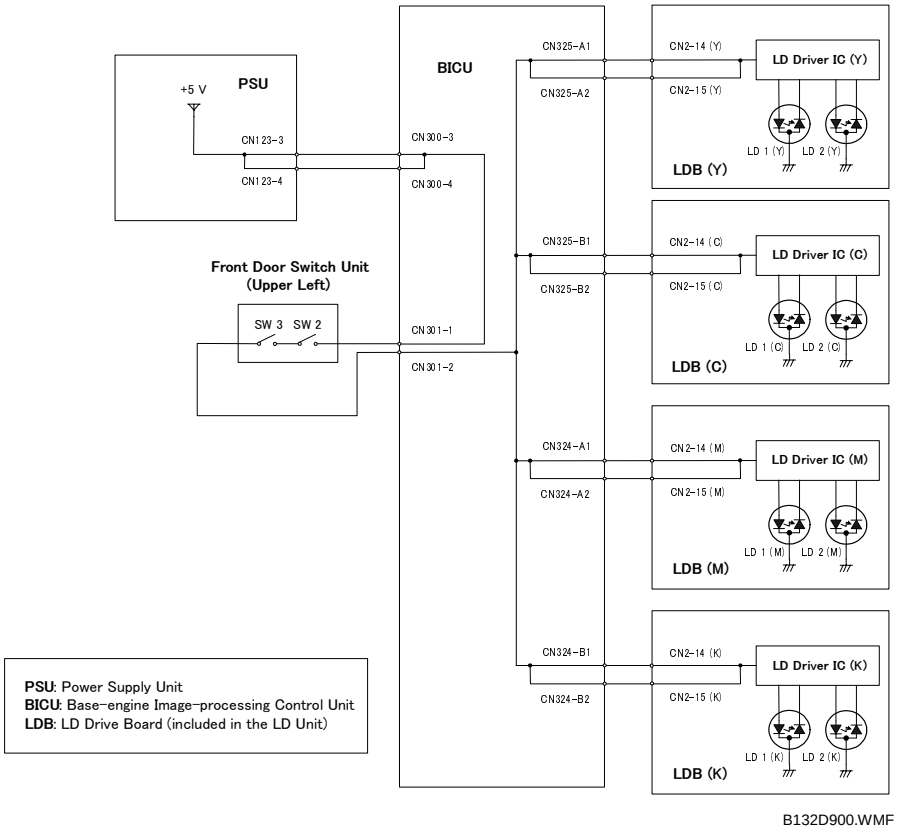

B132D900.WMF

Downloaded from www.Manualslib.com manuals search engine

6.7.3 OPTICAL PATHS

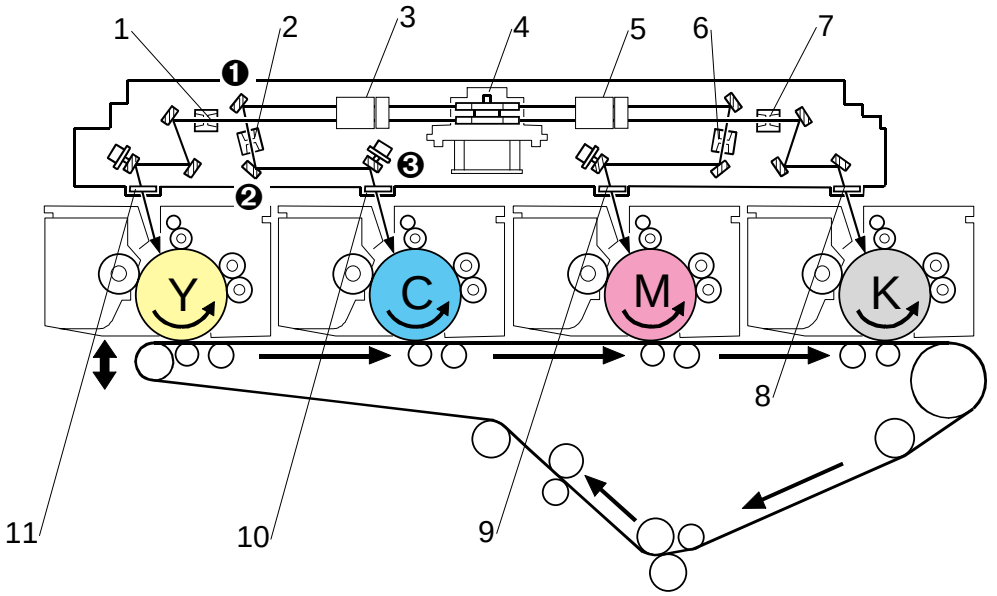

B132D001.WMF

1. WTL Lens (Y)
2. WTL Lens (C)
3. Dual-layer fθ Lens (C, Y)
4. Polygon Motor
5. Dual-layer fθ Lens (M, K)
6. WTL Lens (M)
7. WTL Lens (K)
8. Dust-shield Glass
9. Dust-shield Glass
10. Dust-shield Glass
11. Dust-shield Glass

Downloaded from www.Manualslib.com manuals search engine

Optical Path

All four latent images (C, M, Y, K) are written at approximately the same time. The laser diode turn-on times for each color are timed with drum rotation and paper feed. Refer to the illustration on the previous page. The optical path for each color is as follows:

Cylindrical lens (laser beam correction in each LD unit)	(Not shown)
↓	
Polygon mirror (main scanning line)	4
↓	
Fθ lens (dot position correction)	3
↓	
1st Mirror	❶
↓	
WTL lens (surface distortion correction)	2
↓	
2nd Mirror	❷
↓	
3rd Mirror	❸
↓	
Dust-shield Glass	10
↓	
Drum	

Each fθ lens has two layers. Because of this, it can correct both beams from the LD units. Each WTL lens corrects for image distortion.

The polygon mirror turns at high speed. The laser beams are reflected from the polygon mirror to a pair of mirrors (upper and lower), then to one more mirror and out to the drum through the dust-shield glass. The polygon mirror has six faces.

The polygon motor rotates at 33,307 rpm for full-color and for black-and-white copying.

Important: Because of its high rotation speed, the mirror continues to turn for about 3 minutes after the machine is turned off. Allow enough time for the mirror to stop before you start to remove the polygon motor.

Downloaded from www.Manualslib.com manuals search engine

6.7.4 IMAGE POSITION CORRECTION (MUSIC)

What does MUSIC do?

MUSIC is the *Mirror Unit for Skew and Interval Correction*. Three MUSIC sensors above the ITB read three MUSIC sensor patterns made by the machine on the ITB.

The machine uses the results to adjust:

- The machine adjusts the start timing for the laser at the start of the main scan. This adjusts the main scan. If skew is detected in the main scan direction, the machine adjusts the angles of the 3rd mirrors (C, M, and Y only).
- The speed of the drum motors to correct the intervals between the patterns. This adjusts the sub scan.

If the vertical alignment of the patterns is not correct, or if the intervals are not correct, this causes color registration errors.

The MUSIC adjustment is done for each color (Y, M, C and K).

When is MUSIC done?

Normally, MUSIC executes automatically:

- Immediately after the machine is turned on or returns from an energy save mode.
- At the start of a job, if the temperature in the laser exposure unit changed since the end of the job by the amount set with **SP2153 012** (Default: 1.5 ºC)
- If the cover is open for longer than the time set with **SP2153 015** (Default: 8 min.)
- After process control (enable/disable with **SP2153 002**).
- Every 100 pages during a long color job (you can change the interval with **SP2153 010**) if the temperature in the laser exposure unit has changed since the end of the most recent MUSIC adjustment by the amount set with **SP2153 012** (Default: 1.5^{o}C)
- Forced MUSIC (manually by the user or a technician)
  - User Tools – Maintenance – Color Registration
  - SP 2111 001

Important

- Immediately after the machine is turned on, MUSIC requires time to complete processing. But you can do a black-and-white job immediately.
- If a job is started before the MUSIC process has completed, a message ("Now Self Checking") will appear on the operation panel display.
- The job will not be done until the MUSIC process is finished. Wait for MUSIC to complete.

NOTE: MUSIC: Mirror Unit Skew Interval Correction

Downloaded from www.Manualslib.com manuals search engine

Location of the MUSIC Sensors

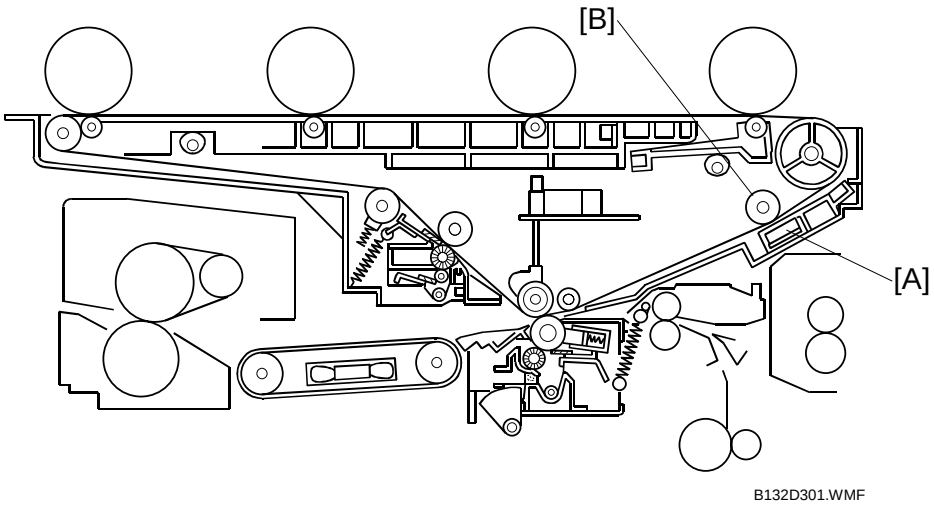

The sensors [A] are below the ITB.

A roller [B] opposite the sensors pushes the transfer belt against the sensors. This makes sure that the sensors read the patterns accurately.

Downloaded from www.Manualslib.com manuals search engine

How is MUSIC Done?

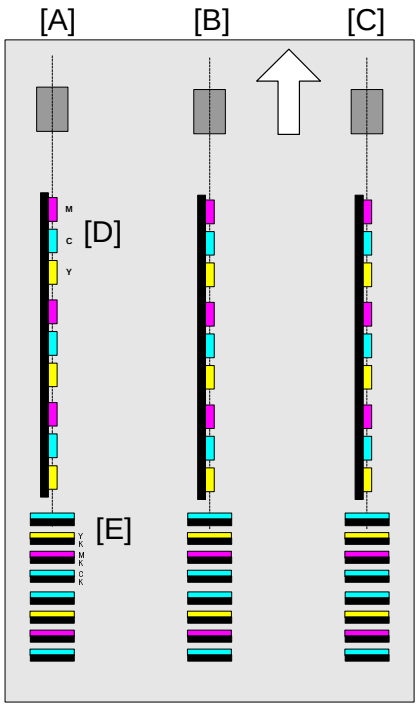

B132D969.WMF

[A]: Rear MUSIC sensor
[B]: Center MUSIC sensor
[C]: Front MUSIC sensor
[D]: Main scan MUSIC patterns
[E]: Sub scan MUSIC patterns

The MUSIC sensors [A], [B], and [C] read the MUSIC patterns from the ITB.

The main scan MUSIC sensor pattern [D] consists of patches for each color (M, C, Y) beside the black (K) color patch.

The sub scan MUSIC sensor pattern [E] consists of patches for each color (M, C, Y) above a black (K) patch.

This diagram shows a close-up view of the main-scan test pattern.

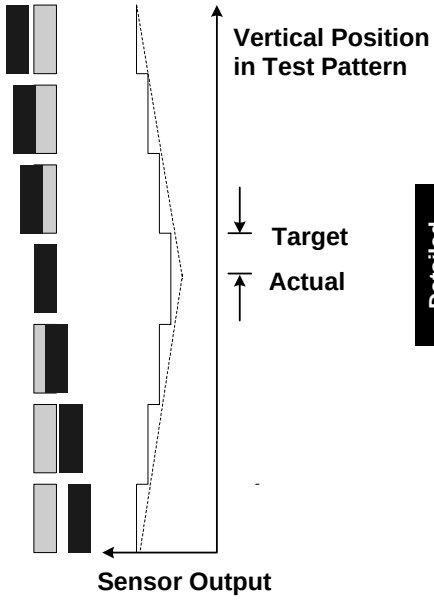

B132D969A.WMF

K is the reference, and the positions of CMY are adjusted with reference to the K pattern.

The CMY patterns are vertical (shown in grey in the diagram), but the K pattern overlaps the CMY patterns as shown.

The MUSIC sensor response is measured. The output is the lowest when the K pattern fully overlaps the color pattern (the dotted lines in the diagram cross at this point). This is the “Actual” position as shown in the diagram. But there is a “Target” value in the machine’s software (an example is shown on the diagram; this is not the real target, it is just an example to explain the process). The machine compares the “Actual” and “Target” values, and adjusts the laser timing in response to the results of this comparison.

Skew is also measured in the main scan direction using the patterns at the left and right of the ITB. If skew is detected, the machine adjusts the angle of the 3rd mirrors.

Downloaded from www.Manualslib.com manuals search engine

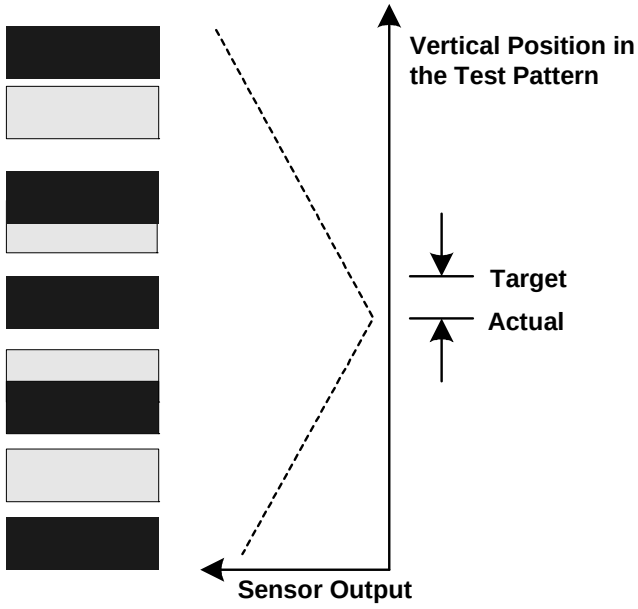

This diagram shows a close-up view of the sub-scan test pattern.

K is the reference, and the positions of CMY are adjusted with reference to the K pattern.

The CMY patterns are at constant intervals, but the K pattern overlaps the CMY patterns as shown.

The MUSIC sensor response is measured. The output is the lowest when the K pattern fully overlaps the color pattern (the dotted lines in the diagram cross at this point). This is the “Actual” position as shown in the diagram. But there is a “Target” value in the machine’s software (an example is shown on the diagram; this is not the real target, it is just an example to explain the process). The machine compares the “Actual” and “Target” values, and adjusts the main motor speed in response to the results of this comparison.

Downloaded from www.Manualslib.com manuals search engine

3rd Mirror Position Adjustment

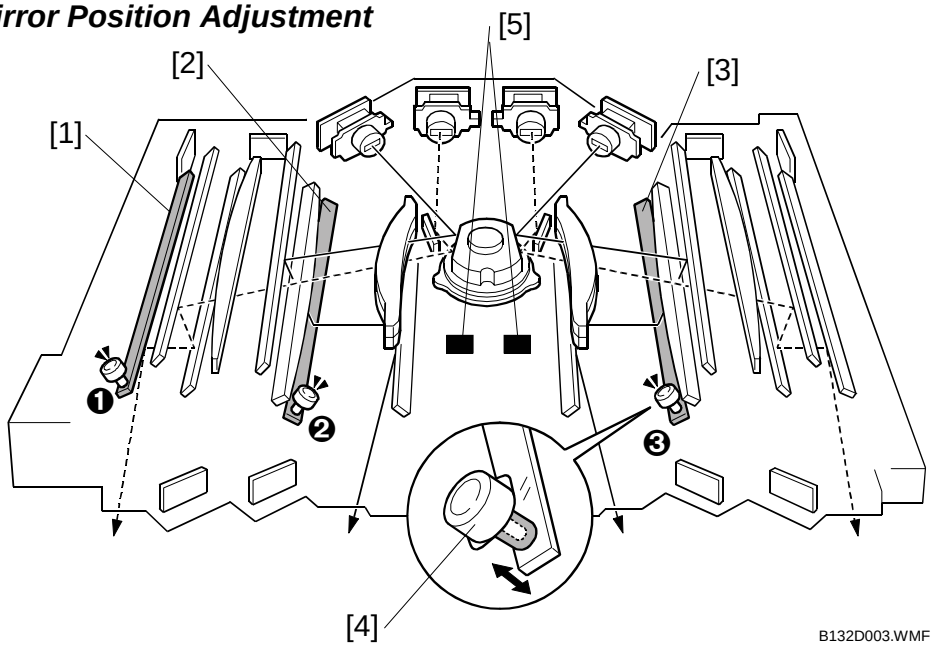

[1]: 3rd Mirror (Y)
[2]: 3rd Mirror (C)
[3]: 3rd Mirror (M)
[4]: Mirror Adjustment Motors (❶❷❸)
[5]: Temperature Sensors

Each color Yellow [1], Cyan [2], Magenta [3] has a mirror. The machine uses the mirror motors (❶❷❸) to adjust the position of each mirror to correct color registration errors on the ITB in the main scan direction. Color registration errors occur if all four color-toner images do not cover each other exactly on the ITB.

The 3rd mirror for black (K) does not have an adjustment motor. (The position of black toner on the ITB is used as a reference point to adjust the positions of the other colors.)

Exposure Unit Temperature Sensors

There are temperature sensors [5] near the fθ lenses to monitor the temperature inside the exposure unit.

The fθ lenses are made of plastic. The magnification ratio of plastic lenses may vary slightly with temperature. The CPU uses the feedback from these temperature sensors to adjust the mirror positions during MUSIC calibration. This corrects color registration errors on the ITB.

Downloaded from www.Manualslib.com manuals search engine

6.8 PHOTOCONDUCTOR UNITS (PCU)

6.8.1 OVERVIEW OF TANDEM PCU

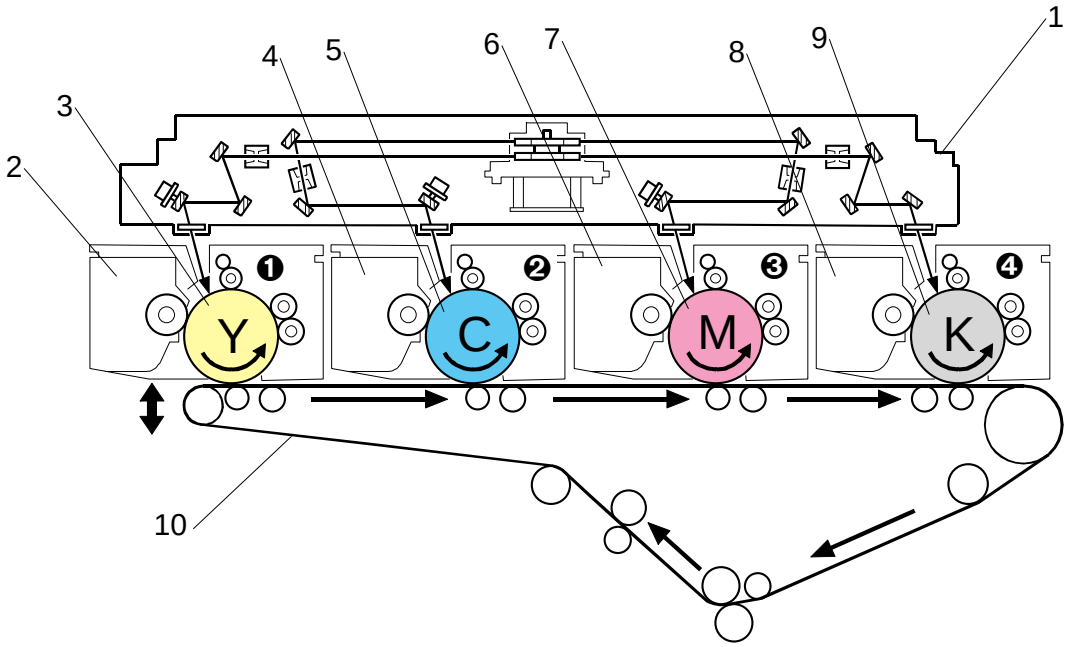

B132D001.WMF

1. Laser Unit
2. Development Unit (Y)
3. Drum (Y)
4. Development Unit (C)
5. Drum (C)
6. Development Unit (M)
7. Drum (M)
8. Development Unit (K)
9. Drum (K)
10. ITB

Four PCUs ❶ ❷ ❸ ❹ (Y, C, M, K) are arranged in tandem. There is one PCU for each color. The image that is developed on the drum transfers to the ITB (10). All four colors transfer during the same rotation of the ITB. Then the color images transfer to the paper. The color images are transferred from the PCUs to the ITB in the order Y, C, M, K.

Each PCU contains identical components. The only difference is that the K PCU has a temperature sensor that is used to correct process control parameters (charge roller voltage, for example).

Downloaded from www.Manualslib.com manuals search engine

6.8.2 AROUND THE DRUM

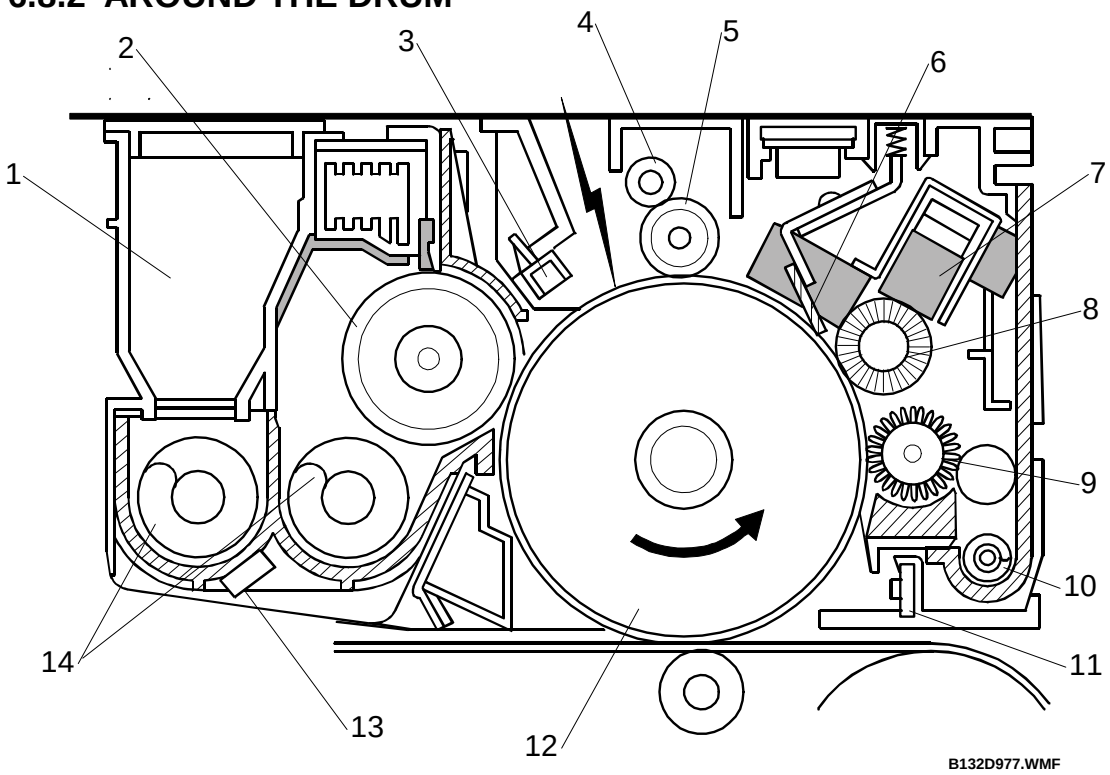

1. Developer Cartridge
2. Development Roller
3. Potential Sensor
4. Charge Roller Cleaning Roller
5. Charge Roller
6. Cleaning Blade
7. Lubricant Bar
8. Lubricant Brush Roller
9. Cleaning Brush Roller
10. Waste Toner Collection Coil
11. Quenching Lamp (QL)
12. Drum
13. TD Sensor
14. Developer Augers

Drum dimensions:	ϕ60 mm
Drum drive:	Drum motor. An independent drum motor for each PCU drives the drum for each color.
Drum charge:	Charge roller method with charge cleaning roller
Drum cleaning:	Cleaning brush roller and cleaning blade mounted opposite to direction of drum rotation
Waste toner:	Transported away from the drum by a waste toner collection coil.

NOTE: The drum unit does not contain an ID sensor.

Downloaded from www.Manualslib.com manuals search engine

Drum Drive

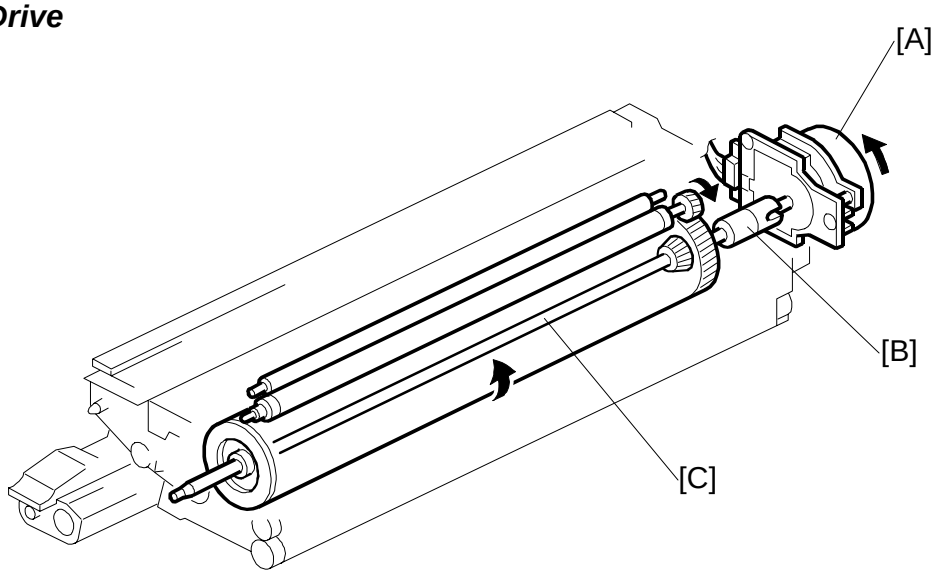

B132D204.WMF

[A]: Drum motor
[B]: Drum motor coupling
[C]: Drum shaft

Each PCU (Y, C, M, K) has an independent drum motor.

The drum motor [A] rotates the drum motor coupling [B] and drum motor shaft [C].

- During black-and-white copying and printing, only the black drum (K) rotates. The other color drums (Y, M, C) do not rotate.
- The drum shaft must be locked with a special tool attached to the front end of the shaft in order to remove the drum motor. The special tool is attached to the bottom of the PCU stand. For more, please refer to Section "3. Removal and Replacement".

Downloaded from www.Manualslib.com manuals search engine

Drum Charge

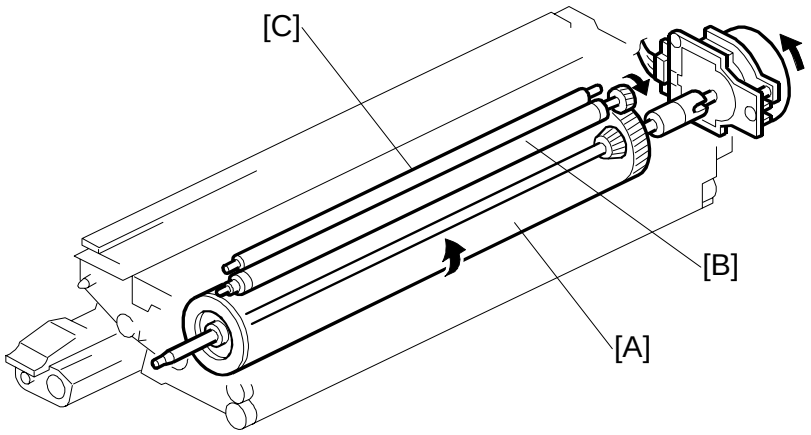

B132D204.WMF

[A]: Drum
[B]: Charge roller
[C]: Charge roller cleaning roller

The charger roller [B] above the drum [A] charges the drum.

The charge roller cleaning roller [C] touches the charge roller and cleans it.

- A gear on the rear of the drum shaft turns the charge roller in the opposite direction of the drum.
- The gap between drum and charge roller is 0.05 mm.
- The charge roller is the same length as the drum to ensure an even charge along the entire length of the drum.
- The charge roller receives its charge from the charge roller power pack. The power pack is connected at a receptacle attached to the rear end of the charge roller shaft.

Downloaded from www.Manualslib.com manuals search engine

Drum Cleaning

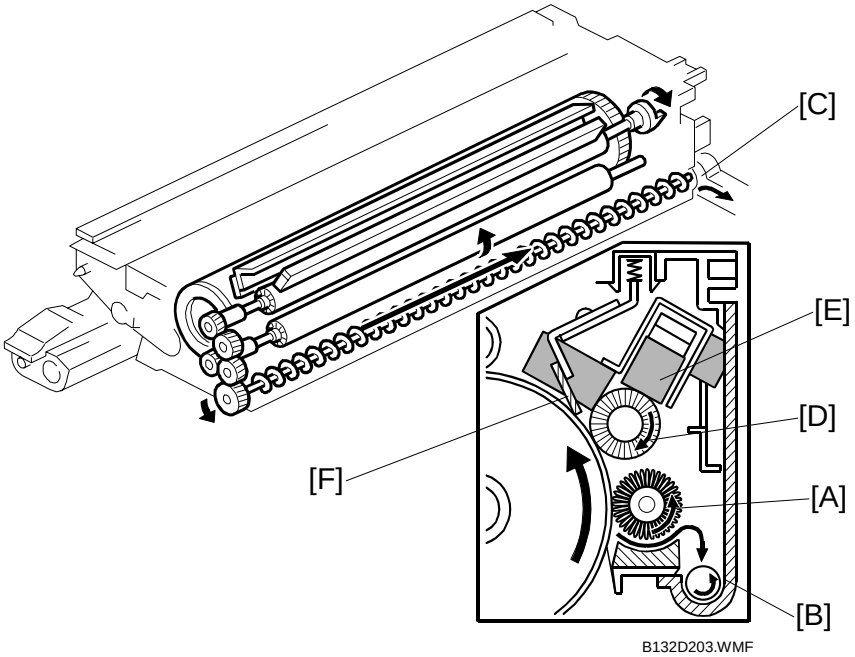

Each drum unit has a cleaning brush roller [A] and a cleaning blade [F] to remove toner from the drum after image transfer.

[A]: Cleaning brush roller
Turns counter-clockwise, brushes unused toner from the drum surface, and pushes the toner into a well where it is caught by the waste toner collection coil

[B]: Waste toner collection coil
The rotation of this spiral coil moves the waste toner away from the drum toward the waste toner port

[C]: Waste toner port
The toner is moved away from this port to the waste toner bottle. (☛6.10)

[D]: Lubricant brush roller
To improve the efficiency of cleaning, the rotating lubricant brush roller lubricates the surface of the drum.

[E]: Lubricant bar
Provides the lubricant transferred to the drum surface by the lubricant brush roller.

[F]: Cleaning blade
A counter blade in direct contact with the drum surface, gently scrapes away remaining toner from the surface of the drum after the lubricant brush roller cleaning and lubrication.

Downloaded from www.Manualslib.com manuals search engine

Drum Ventilation

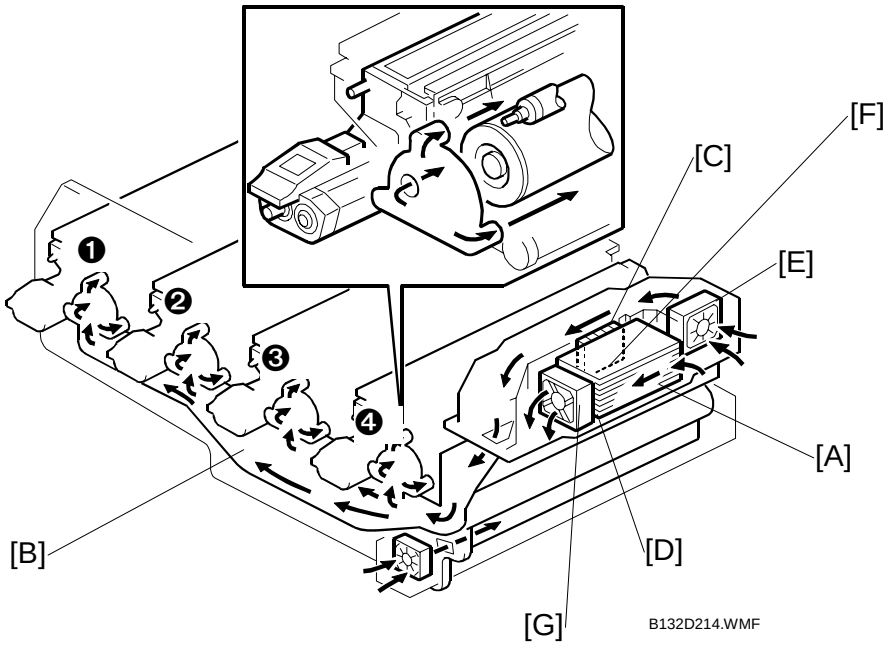

A Peltier unit [A] on the right side of the copier dries air before it is sent through a common duct [B] to the PCUs. This prevents condensation around the drums.

The polarity of this Peltier is set so the left side [C] is the cold side and the right [D] is the hot side.

The Peltier cooling fan [E] pulls air into the machine. The air passes through the cold side where the moisture condenses and drains into a small reservoir [F]. The four PCU fan motors ❶, ❷, ❸, ❹ (Y, M, C, K). pull the dried air from the common duct into the PCUs to keep dry the air around the drums.

The moisture is absorbed by an absorbent pad (not shown) below the Peltier unit.

The hot laminated plates on the right side of the Peltier unit evaporate the moisture. The Peltier circulation fan [G] sends the hot air out of the machine.

Downloaded from www.Manualslib.com manuals search engine

The temperature/humidity sensor at the black PCU detects the relative humidity inside the machine.

When the relative humidity stays at 60% for 10 minutes:

1) The Peltier unit turns ON.
2) The Peltier circulation fan and PCU fans turn on together and run at half-speed.
3) The Peltier cooling fan turns on and runs at full speed.

The operation changes when the relative humidity goes below 50% for 5 minutes:

1) The Peltier unit turns OFF.
2) The Peltier circulation fan turns OFF.

When the humidity stays below 50% for another 5 minutes:

1) The Peltier cooling fan turns OFF.
2) The PCU fans turn OFF.

Downloaded from www.Manualslib.com manuals search engine

Ozone Ventilation

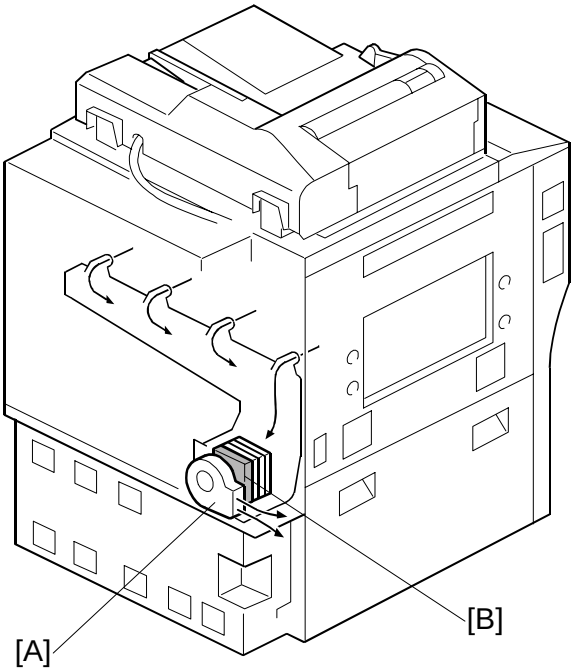

The ozone fan [A] pulls air from around the drums through the ozone filter [B] and then expels the filtered air from the machine.

Downloaded from www.Manualslib.com manuals search engine

6.8.3 DEVELOPMENT UNIT

Overview

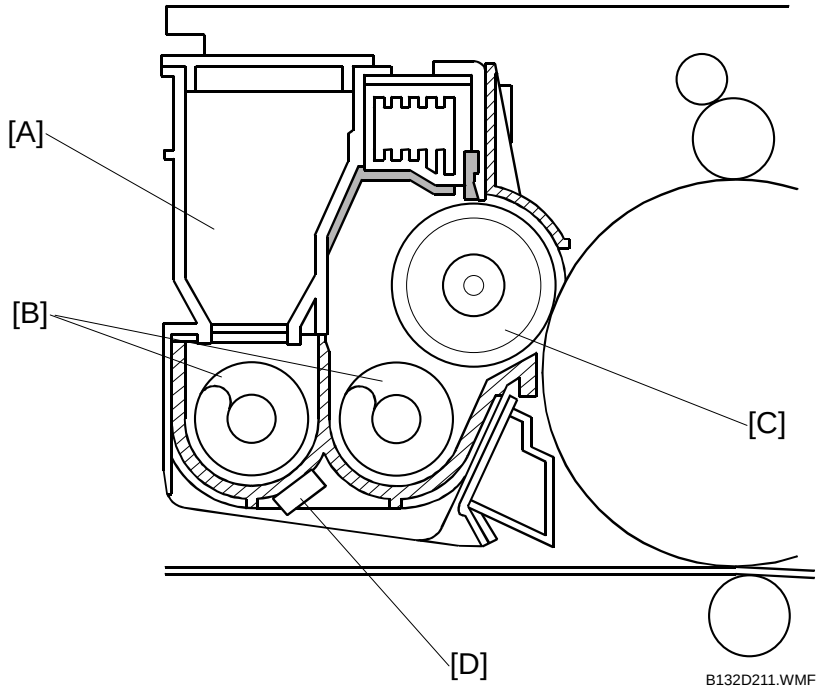

[A]: Developer Cartridge
[B]: Developer Augers
[C]: Development Roller
[D]: TD Sensor

Development method:	Dual-component development
Agitation:	Two augers
Development unit drive:	PCU motor, 1 motor for each PCU (Y, C, M, K)
Development bias:	Development bias power pack

Downloaded from www.Manualslib.com manuals search engine

Development Unit Operation

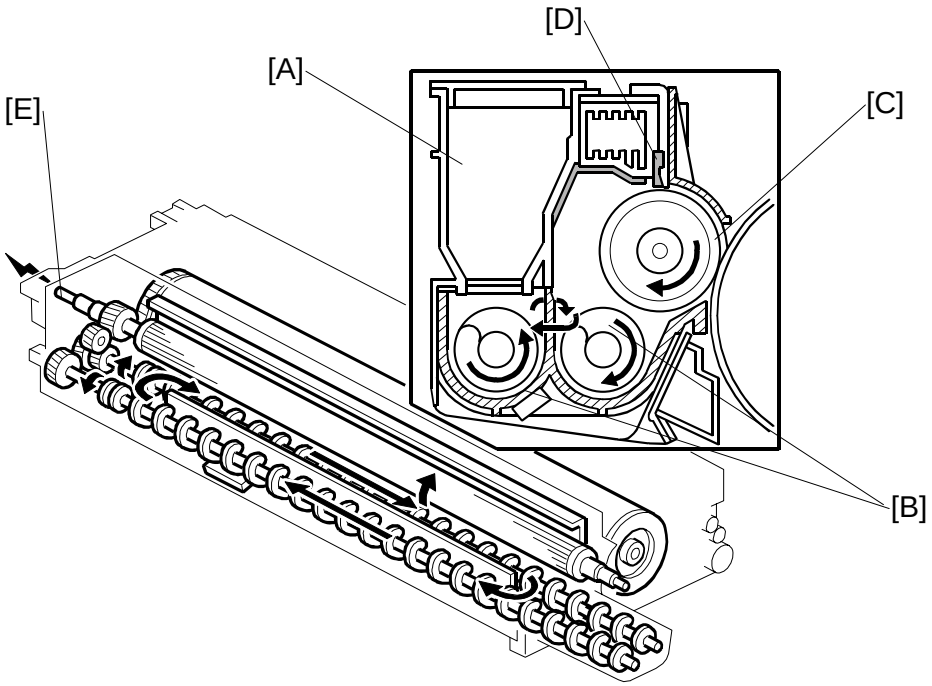

B132D212.WMF

[A]: Developer Cartridge
[B]: Developer Augers
[C]: Development Roller
[D]: Doctor Blade
[E]: Development Bias Terminal

Each PCU is supplied by a separate developer cartridge [A] (Y, C, M, K). When a new developer cartridge is installed and the tape is removed, all the developer falls into the development unit, across the full width of the development unit. Toner is supplied through a small square port at the front of the development unit (see section 6.9).

Two development augers [B] cross-mix the toner from the toner cartridge with the developer and then send the mixture to the development roller.

The magnetic development roller [C] pulls the developer-toner mixture onto its surface as it rotates.

Near the top of the development unit, the doctor blade [D] cuts and smoothes the developer-toner mixture to the correct thickness.

The bias from the development bias power pack is applied to the development bias terminal [E] that is attached to the shaft of the development roller

Downloaded from www.Manualslib.com manuals search engine

Development, PCU Drive

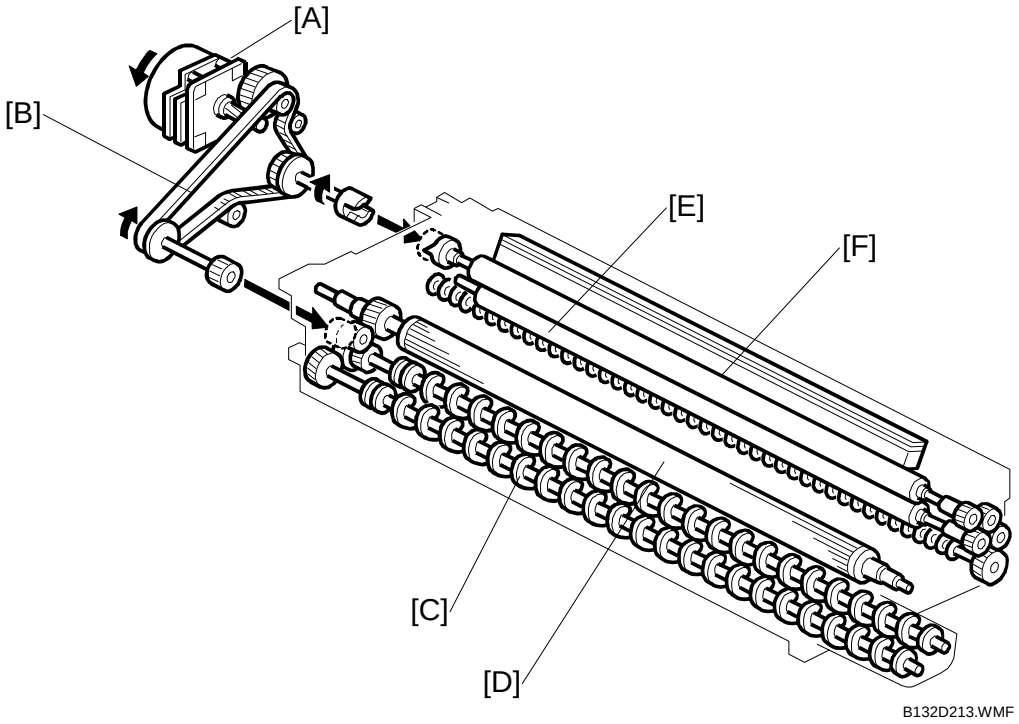

[A]: PCU Motor
A motor and timing belt behind each PCU drives all the rollers in the PCU. (The drum is driven by the drum motor.)
[B]: Timing Belt
[C]: Developer Augers
[D]: Development Roller
[E]: Cleaning Brush Roller
[F]: Lubricant Brush Roller

Downloaded from www.Manualslib.com manuals search engine

6.9 TONER SUPPLY

6.9.1 OVERVIEW

Each PCU has a toner supply unit.

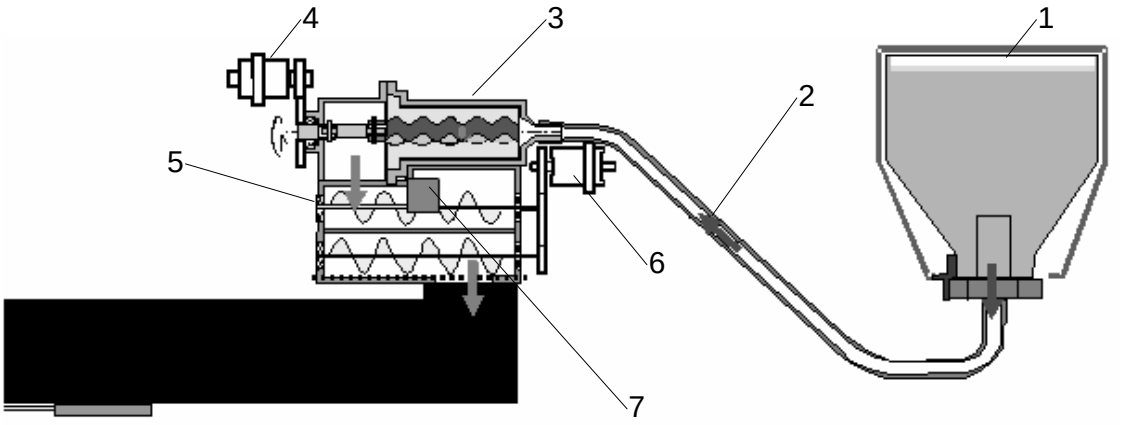

B132D906.BMP

1. Soft Toner Cartridge (STC)
2. Flexible Tubing
3. Toner Pump
4. Toner Pump Clutch
5. Sub Hopper
6. Toner Supply Clutch
7. Toner End Sensor

Toner supply:	Sub hopper, toner supply clutch
Toner transport:	Toner pump, toner pump clutch
Toner container	Soft Toner Cartridge (STC), sides collapse automatically as toner is pumped from each cartridge
Toner level detection:	Toner end sensor
Toner cartridge ID:	Built-in chip identifies color and type of cartridge, to prevent installation at incorrect location.

Downloaded from www.Manualslib.com manuals search engine

1. Soft Toner Cartridge (STC)
   Four toner cartridges are set in the toner hopper. They are inserted left to right in this order Y, C, M and K.
2. Flexible Tubing
   A flexible tube connects the toner cartridge to the toner pump.
3. Toner Pump
   Consists of a rotor mounted on a drive shaft that creates a vacuum between itself and the toner cartridge. The rotor is idle until it is engaged by the toner pump clutch.
4. Toner Pump Clutch
   The toner pump clutch is driven by the toner hopper motor. This clutch engages the drive shaft and rotor of the toner pump when more toner is needed.
5. Sub Hopper
   Receives the toner from the toner pump. The sub hopper functions as a reserve tank for the development unit.
6. Toner Supply Clutch
   The toner supply clutch is driven by the toner hopper motor. Engages the toner supply auger in the sub hopper to send the toner from the sub hopper into the development unit below.
7. Toner End Sensor
   This sensor is on the sub hopper, and detects toner end. The number of pages that can be printed is based on page count or pixel count, whichever limit is exceeded first.
8. Toner Hopper Motor
   The toner hopper motor is on the right side of the toner hopper. This motor drives all the toner pump clutches and toner supply clutches in each toner hopper (Y, M, C, K).

Downloaded from www.Manualslib.com manuals search engine

6.9.2 TONER SUPPLY MECHANISM

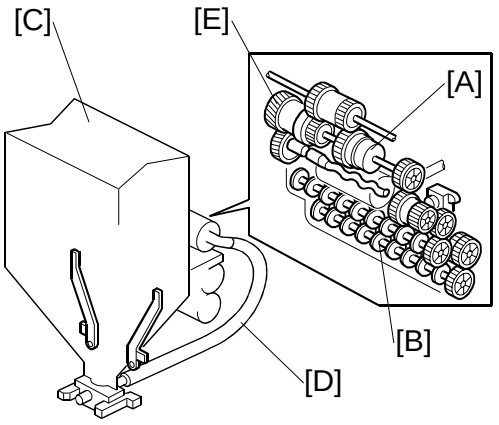

B132D216.WMF

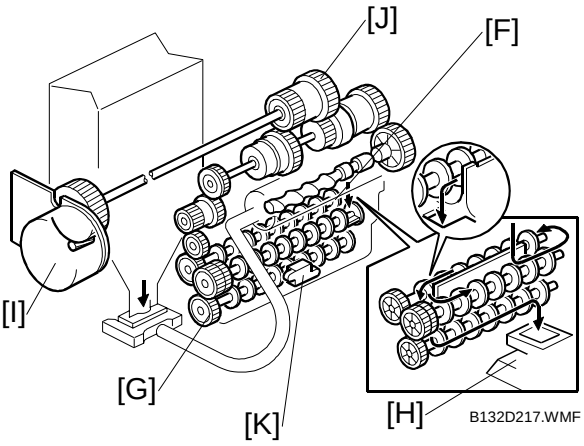

B132D217.WMF

The toner pump [A] pulls toner into the sub hopper [B] from the toner cartridge [C], through the flexible tube [D]. The toner hopper motor controls the mechanism, through the toner pump clutch [E].

Toner cartridge → sub hopper

The toner pump supplies toner to the sub hopper. If the toner end sensor [K] output detects "No Toner", the toner pump switches on for 2 seconds, and pumps toner from the toner cartridge to the sub hopper.

Sub hopper → development unit

Based on the toner coverage of the previous print (detected by the TD sensor) the machine determines how much toner was consumed, compares it with the amount remaining, and then switches on the toner supply clutch for the correct time to increase the amount of toner in the development unit.

The toner supply augers [F] move toner from the hopper [G] into the development unit [H]. The toner hopper motor [I] controls the mechanism through the toner supply clutch [J].

Downloaded from www.Manualslib.com manuals search engine

6.9.3 TONER CARTRIDGE

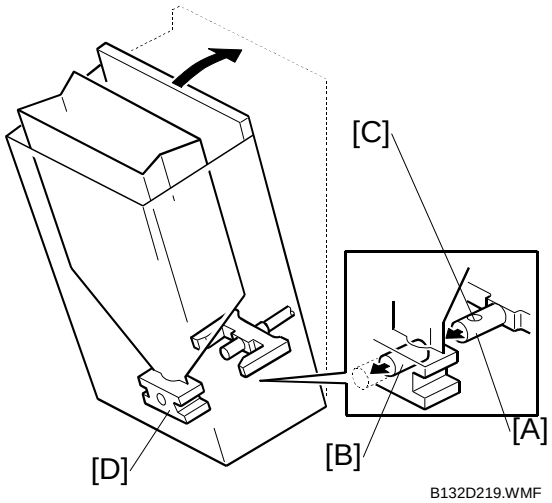

B132D219.WMF

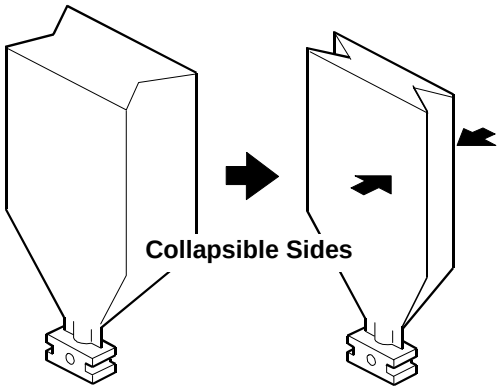

B132D218.WMF

[A]: Shutter pin
[B]: Toner supply port plug
[C]: Toner supply port
[D]: ID chip

Each toner cartridge is installed in a bin of the toner hopper.

When the bin door is closed, a shutter pin [A] forces open a plug [B]. This opens the toner supply port [C] and toner can flow from the cartridge.

When the cartridge is removed from the machine, the plug [B] moves to its original position and covers the toner supply port of the toner cartridge. This prevents toner leakage from the bottom of the toner cartridge (STC) when the toner cartridge (STC) is removed.

The sides of a toner cartridge gradually collapse as toner is pulled out of the cartridge by the toner pump.

The built-in ID chip [D] near the toner supply port holds information about the color and type of toner, the location of the factory where it was produced, and other information.

Downloaded from www.Manualslib.com manuals search engine

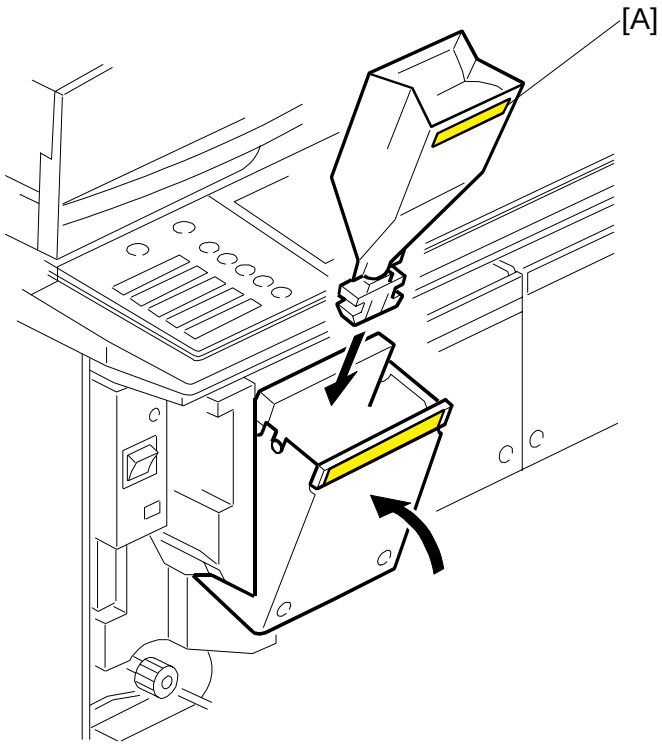

B132I108A.WMF

A toner cartridge (STC) must be set with its color ID label [A] facing out.

If a toner cartridge (STC) is inserted with its label facing into the machine, this will cause a "Toner Cartridge Setting Error".

Important

- At elevations 1,000 meters (3,280 ft.) above sea level, the toner cartridge packs may expand due to the difference in air pressure, preventing them from being installed in their bins.
- After approximately 24 hours, the cartridges should shrink to normal size.
- If the customer cannot wait for the toner cartridges (STCs) to collapse naturally, the STC Air Release Kit is available as a service part. For more, contact your technical supervisor.

Downloaded from www.Manualslib.com manuals search engine

6.9.4 TONER END SENSORS

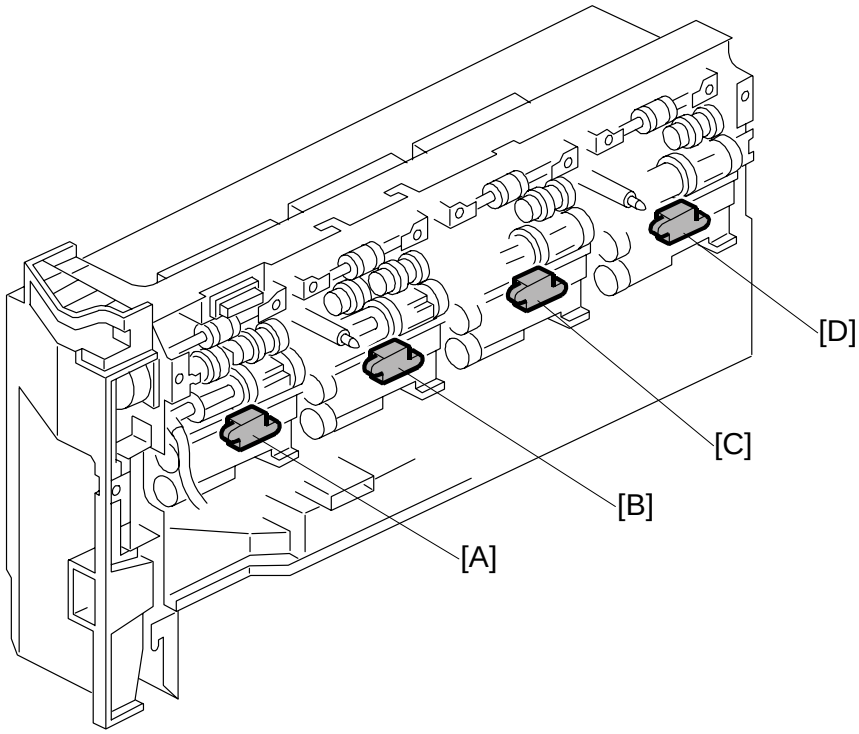

B132D217A.WMF

The toner end sensors are below the sub hoppers for each color

[A]: K (Black)
[B]: M (Magenta)
[C]: C (Cyan)
[D]: Y (Yellow)

The toner end sensor monitors the amount of toner in the sub hopper and issues the near-end alert when toner runs low in the sub hopper.

Toner near-end

When a toner end sensor detects no toner in a sub hopper, the toner supply clutch in that sub hopper engages and operates the toner pump for 2 seconds to supply more toner from the toner cartridge (STC) to the sub hopper.

If the toner end sensor cannot detect toner in a sub hopper after 10 consecutive readings, this triggers the toner near-end alert (this number of readings can be adjusted with **SP3411 007-008**).

Downloaded from www.Manualslib.com manuals search engine

Toner end

After a toner near-end alert is output, the number of pages that can be printed until toner end is determined by the amount of toner that remains in the sub hopper. After the toner near-end alert has been issued, the toner end alert is issued by one of two counters, whichever goes over the limit first:

- **Page count**. After the near-end alert, the number of pages that can be printed is based on page count regardless of coverage. The default is 600 (this can be adjusted with **SP3411 003 to 004**). Up to 10 A4/DLT pages at 5% coverage can be printed (**SP 3411 001-002**).
- **Pixel count (coverage**). The number of pages that can be printed is determined by a calculation of the coverage (30 A4/DLT pages at 100% coverage). The default setting can be adjusted with **SP3411 005 to 006**.

Important

- The number of pages that actually print after the toner near-end alert is issued varies, of course, with paper size and amount of coverage on each page.

Toner End Recovery

After a new cartridge is installed, the machine supplies toner from the new cartridge to the sub hopper. If the toner end sensor detects that toner was supplied, the machine goes out of the toner end condition.

Downloaded from www.Manualslib.com manuals search engine

6.10 WASTE TONER COLLECTION

6.10.1 WASTE TONER PATH

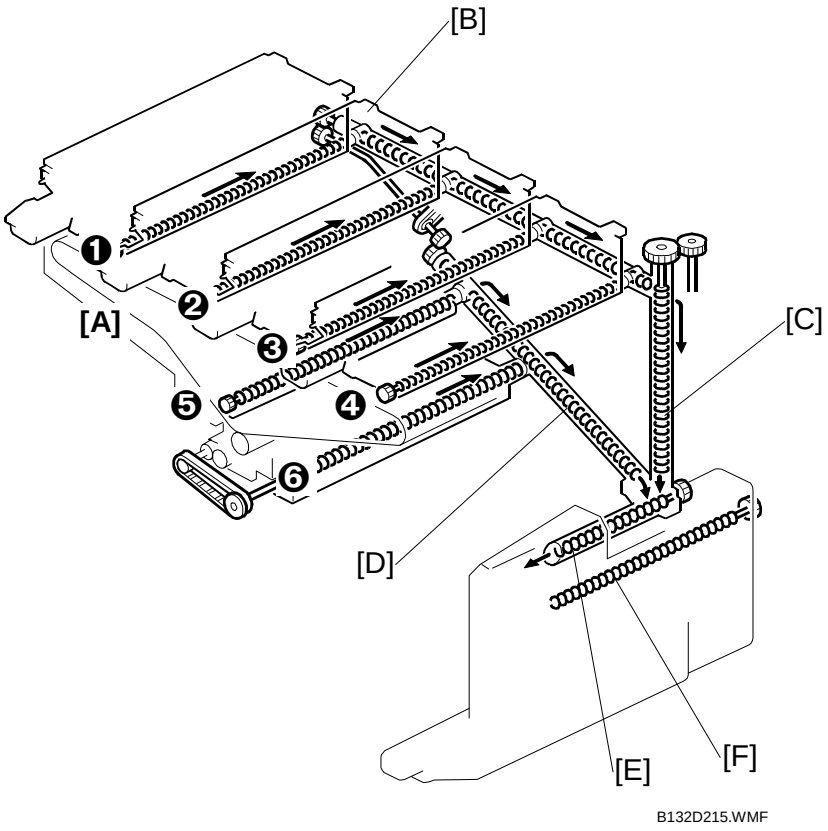

[A]: Waste Toner Collection Coils
- ❶ PCU (Y)
- ❷ PCU (C)
- ❸ PCU (M)
- ❹ PCU (K)
- ❺ ITB Unit
- ❻ PTR Unit

[B]: Horizontal Waste Toner Transport Coil
[C]: Vertical Waste Toner Transport Coil
[D]: Diagonal Waste Toner Transport Coil
[E]: Waste Toner Bottle Transport Coil
[F]: Waste Toner Bottle Distribution Coil

Downloaded from www.Manualslib.com manuals search engine

[A]: Waste Toner Collection Coils
Six waste toner collection coils (1 for each PCU and 1 each for the ITB and transfer roller) transport waste toner away from these components after cleaning. The PCU motors drive coils ❶ to ❹. The PTR motor drives coils ❺ and ❻.

❶ PCU (Y)
❷ PCU (C)
❸ PCU (M)
❹ PCU (K)
❺ ITB Unit
❻ PTR Unit

[B]: Horizontal Waste Toner Transport Coil
Driven by the PTR motor, this transports waste toner from the PCU waste toner collection coils to the vertical waste toner transport coil.

[C]: Vertical Waste Toner Transport Coil
Driven by a parallel vertical shaft connected to the waste toner bottle transport motor, this transports waste toner from the horizontal waste toner collection coil to the central collection point above the waste toner bottle.

[D]: Diagonal Waste Toner Transport Coil
Driven by the PTR motor, this transports waste toner from the ITB unit and PTR unit waste toner collection coils to the central collection point above the waste toner bottle.

[E]: Waste Toner Bottle Transport Coil
Driven by the waste toner bottle transport motor, this transports waste toner from the central collection point to entrance of the waste toner bottle.

[F]: Waste Toner Bottle Distribution Coil
This coil at the top of the waste toner bottle is driven by the waste toner distribution motor. The coil distributes the waste toner evenly across the length of the waste toner bottle.

Downloaded from www.Manualslib.com manuals search engine

6.10.2 WASTE TONER UNIT MOTORS

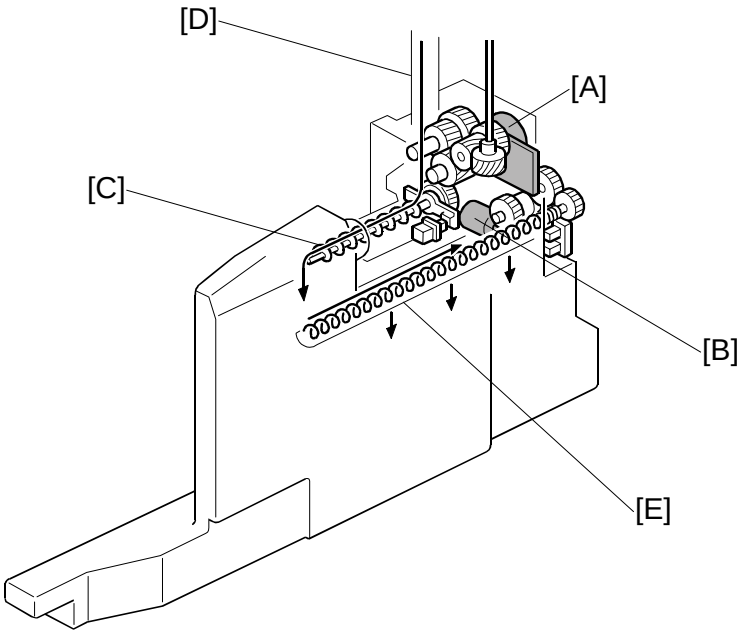

[A]: Waste Toner Transport Motor
Drives the waste toner bottle transport coil [C] and the vertical waste toner transport coil [D].

[B]: Waste Toner Distribution Motor
Drives the waste toner bottle distribution coil [E]. This motor does not constantly turn.

Downloaded from www.Manualslib.com manuals search engine

6.10.3 WASTE TONER COLLECTION UNIT SENSORS

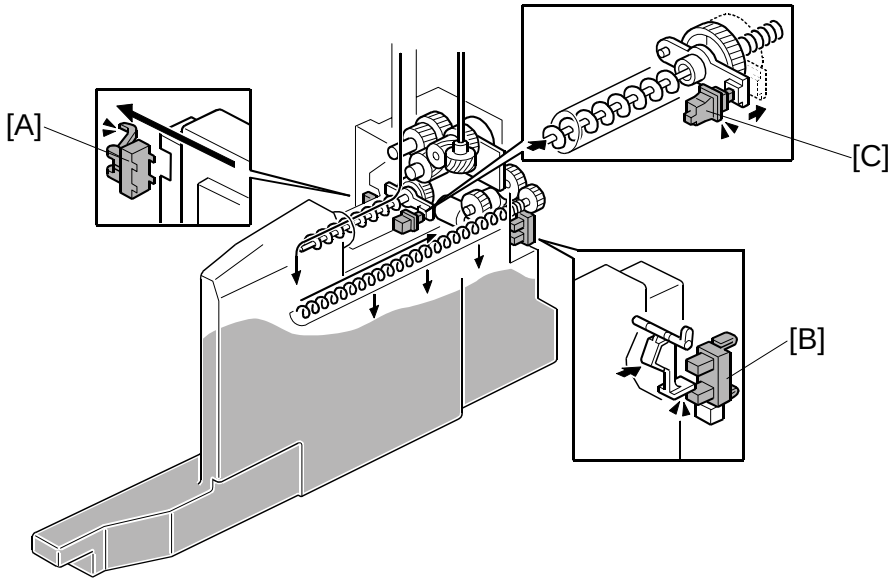

B132D221.WMF

Three sensors in the waste toner monitor the operation of waste toner collection and trigger an alert on the operation panel or issue an SC code.

[A]: Waste Toner Bottle Set Sensor
[B]: Waste Toner Bottle Near-Full Sensor
[C]: Waste Toner Bottle Full Sensor

Waste Toner Bottle Set Sensor

This sensor [A] detects the position of the waste toner bottle, and checks if it is set correctly. When the waste toner bottle is set in the machine, the bottle pushes the feeler of this sensor away from the sensor and turns the sensor on.

The machine issues SC487 if the waste toner bottle is not installed or if it is not installed correctly.

Downloaded from www.Manualslib.com manuals search engine

Waste Toner Bottle Near-Full Sensor

When the level of the waste toner rises high enough:

- The pressure of the top of the stack of waste toner pushes a piece of silicone rubber, then the film pushes a feeler into the gap of the sensor [B].
- The blocked sensor signals the machine that the waste toner bottle is nearly full.
- The machine issues a near-full alert and switches off the waste toner distribution motor.

Waste Toner Bottle Full Sensor

Monitors the level of the waste toner in the waste toner bottle. Signals an alert when the pressure of the waste toner releases the bottle full sensor [C].

After the alert is issued, the machine can print up to 100 additional copies. After 100 copies, the machine issues SC484.

Waste Toner Lock Sensor

This sensor is located on the PTR motor bracket. It detects when the waste toner bottle transport coil locks and stops rotating because of clogged toner in the waste toner transport path. The machine issues SC488 if there is no change 3 seconds after the lock occurs.

Waste Toner Transport Motor

If the waste toner transport motor does not turn for 600 ms, the motor control board sends a motor lock signal to the CPU and the machine issues SC485.

Downloaded from www.Manualslib.com manuals search engine

6.11 PROCESS CONTROL

6.11.1 OVERVIEW

In this machine, there are two processes.

- **Potential control**. Adjusts the image creation process (charge, development bias, and LD power) to achieve the target toner coverage. During potential control several series of patterns are created at prescribed times. The potential sensor and ID sensor read these patterns. The readings of these sensors are used to determine the development capacity (development gamma), and then adjust the conditions around the drum to reproduce the best possible images. Potential control also puts the machine in the best possible condition to begin toner supply control.
- **Toner supply control**. Detects the amount of toner applied to ID sensor patterns between pages and adjusts the amount of toner supplied to the development unit to maintain consistency in the amount of toner.

NOTE: MUSIC (Mirror Unit Skew Interval Correction) done to correct the horizontal and vertical skewing of the print images on the ITB is not part of process control.

Downloaded from www.Manualslib.com manuals search engine

6.11.2 COMPONENTS USED DURING PROCESS CONTROL

Potential Sensor

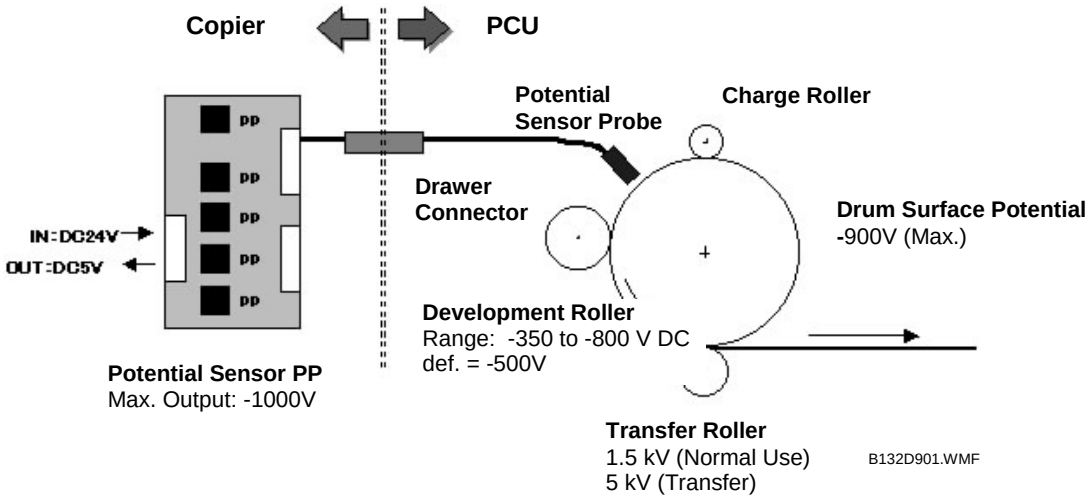

There is a potential sensor in each PCU above the surface of the drum.

Each potential sensor consists of a probe and small power pack. A drawer connector connects the probe and the power pack as shown above.

The potential sensor measures the potential of the drum immediately after it is charged by the charge roller. It also measures a series of patterns (undeveloped latent images) exposed on the drum by the laser diodes:

- A detector in the center of a very small window measures the strength of the electrostatic charge on the drum surface. The strengths of the charges vary, depending on the surface potential of the drum.
- A feedback circuit applies voltage to the probe until the strength of this charge equals (offsets) the strength of the charge on the drum.

Downloaded from www.Manualslib.com manuals search engine

ID Sensors

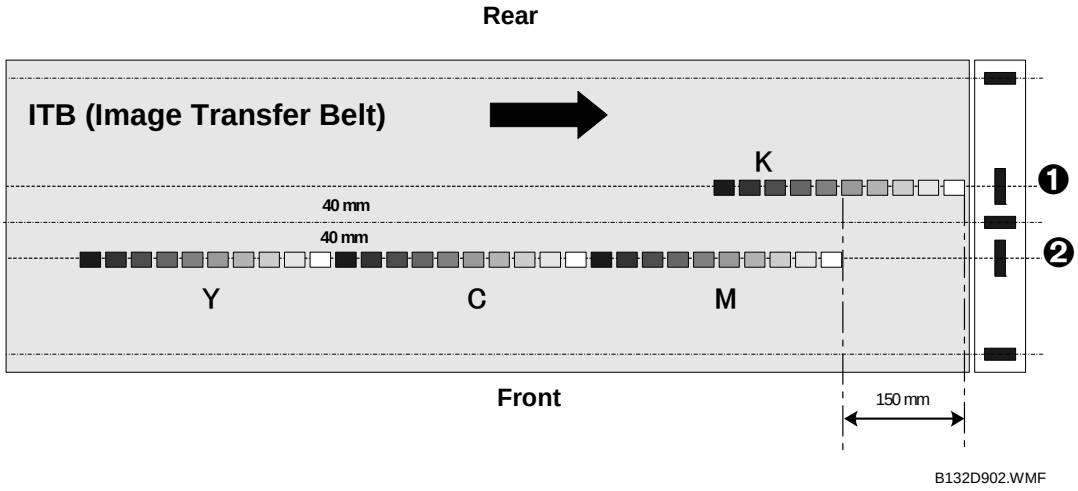

There are two ID sensors above the surface of the ITB:

- The black ID sensor ❶ (rear) detects the black ID sensor pattern (K).
- The color ID sensor ❷ (front) detects the three color ID sensor patterns (Y, C, M).

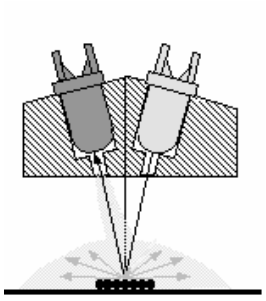

Black ID Sensor

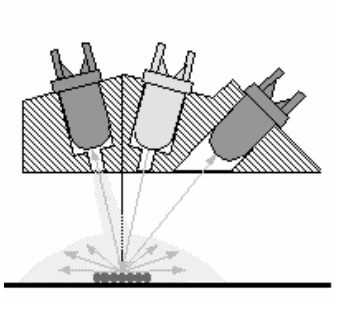

Color ID Sensor

The black ID sensor is a *direct reflection* sensor.

The color ID sensor is a combination of a direct reflection sensor and a *diffused reflection* sensor. This combination of a direct reflection sensor pair and an additional diffused reflection sensor achieves more accurate readings for Y, M, C colors.

Downloaded from www.Manualslib.com manuals search engine

During process control, the creation of the patterns is timed so the Magenta, Cyan and Yellow patterns are transferred to the ITB at approximately the same time. The color ID sensor ❷ then reads the color ID sensor patterns in the order M, C, Y.

Note that the K pattern is read by the black ID sensor ❶ at approximately the same time the Cyan pattern is being read.

These ID sensors read the following patterns from the ITB:

- 10-grade patterns (x4) during process control
- 16-grade patterns (x4) during process control gamma correction
- ID sensor patterns (x4) at 10 page (and other intervals) for toner supply control

Downloaded from www.Manualslib.com manuals search engine

TD Sensor

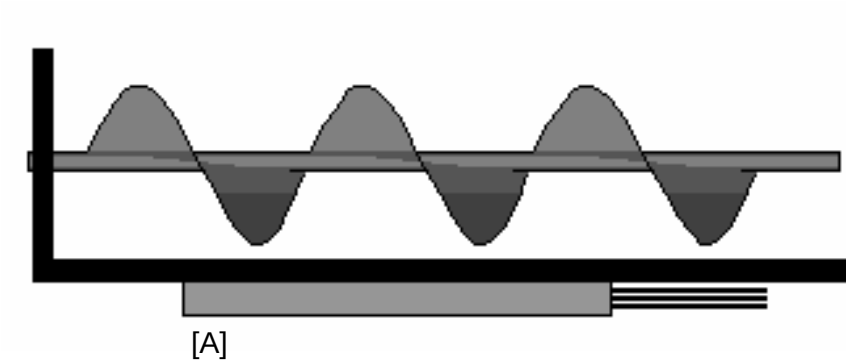

There is a TD sensor [A] below the development unit of each PCU.

The TD sensor directly measures the amount of toner in the developer/toner mixture. Unlike previous machines, this TD sensor is not in direct contact with the developer/toner mixture.

Vt is the output voltage of the TD sensor. When Vt goes high, toner is added to the developer to bring Vt back to the Vtref value.

Temperature/Humidity Sensors

Two temperature/humidity sensors are used for process control. One is above the black PCU, and one is below the waste toner bottle.

Temperature/humidity sensor – PCU K

This sensor is in the black PCU (the last PCU on the right).

The output of this sensor is used to:

- Set the level of the ac charge applied to the charge roller of each PCU
- Set the length of time the agitator in the development unit rotates to mix the developer and toner.
- Controls the Peltier unit

Bottom temperature/humidity sensor

This sensor is below the waste toner bottle.

The output of this sensor is used to control the amount of current applied to the ITB and paper transfer roller. It is also used to correct the fusing idling temperature.

Downloaded from www.Manualslib.com manuals search engine

List of Process Control Acronyms

The potential control phase of process control involves many adjustments. Here is list of acronyms used in the descriptions of process control adjustments.

Acronym	Description
Cdc	Charge DC bias
Vb	Development charge bias
Vb✱[1]	Development charge bias after Vr (residual potential) adjustment
Vd	Drum potential after the drum is charged by the charge roller.
Vd✱[1]	Drum potential after Vr (residual potential) adjustment
Vdhome	The electrical potential of the drum after a fixed dc bias (DC –700V) is applied by the drum charge roller.
Vdp	Development potential (Vb – Vpl). This is the ability to attract toner to the drum.
Vk	Development start voltage (checks the developer at the beginning of process control to determine whether it has deteriorated)
Vl	Light potential. Development potential of areas on the drum exposed by the laser diodes. Maximum laser power has been applied to the diodes.
Vpl	Electrical potential after laser exposure, with 24/63 of maximum laser power (power is controlled with PWM).
Vpl✱[1]	Electrical potential (Vpl) after Vr (residual potential) adjustment
Vpp	Charge AC bias.
Vr	Residual potential
Vsg_dif	Vsg after checking the bare surface of the ITB by the diffused reflection sensor.
Vsg	ID sensor output after reading bare surface of the ITB
Vsg_reg	Vsg after checking the bare surface of the ITB by the direct reflection ID sensor.
Vsp	ID sensor output from the most recent ID sensor pattern.
Vt	TD sensor output at the present time.
Vtcnt	Gain value calculated during TD sensor initialization. This is used to adjust the Vt (TD sensor output). A large gain increases Vt, and a small gain decreases it. The result of this calculation is also used to calibrate Vt during TD sensor initialization.
Vtref	Target output of the TD sensor. The machine always tries to adjust the toner WT% in the developer to bring Vt closer to Vtref.

[1] Adjustment done for each color Y, M, C, K

Downloaded from www.Manualslib.com manuals search engine

Important SP Codes Related to Process Control

This table lists the SP codes that are associated with the most important elements of process control. For more, please refer to Section "5. Service Tables".

		SP3501 001 Potential Control Type Selection		Initial	Range	Target Effect in Process Control
		0: Auto	1: Fixed			
Charge						
Charge dc bias	Cdc	**SP3576**	**SP2201**	–700 V	–450 to –950 V	Potential control
Charge ac bias	Vpp	**SP3577**	**SP2202**	2.2 kV	1.8 to 2.4 kV, 2.2 kHz	Prevention of abnormal images
Exposure						
PM (LD power)	Ldp	**SP3581**	**SP2211**	0	–117 to +127	Potential control
Development						
Development bias	Vb	**SP3575**	**SP2212**	–500 V	–300 to –800 V	Potential control

Downloaded from www.Manualslib.com manuals search engine

6.11.3 POTENTIAL CONTROL

When is Potential Control Done?

1. **Initial process control self-check.** The process control self-check is done automatically after the machine is turned on, if the pressure roller thermistor detects that the fusing temperature is below 100°C (adjust this temp with **SP3554 001**).
   NOTE: The initial process control self-check is not done when the machine is turned on with the front door open.
2. **At the end of every job, if the number of pages since the previous process control is more than the value of SP3551.**
   There are separate counters for black-and-white and color pages.
   - Black-and-white: After 250 pages (adjust with **SP3551 001**)
   - Color: After 200 pages (adjust with **SP3551 002**)

   Either SP code can be set to "0", which disables this feature.
3. **Before ACC (Automatic Color Calibration)** The process control self-check is done after pressing [Execute] on the operation panel to start ACC and just before the ACC pattern prints. However, this operation can be changed with **SP3501 004**:

0	Process control self-check is not done before the ACC pattern prints.
1	A partial self-check (only potential control) is done before the ACC pattern prints. This takes about 24 seconds.
2	The full process control self-check (potential control and toner density control) is done before the ACC pattern prints (default). This takes between 24 seconds and 180 seconds.

4. **Immediately after initialization of the TD sensor.** The process control self-check is done automatically every time a TD sensor is initialized.
   - Done after **SP3801 001-006** is executed (after replacing the developer).
   - Done after **SP3811** is executed (at machine installation, or after replacing developer). See section 3.5.7 for details on the SPs to do after you replace a part.
5. **Potential control process control self-check**. This is done with **SP3820 001**.
6. **Potential control and toner density adjustment process control self-check**. This is done with **SP3820 002**. This SP must be done manually when the drum is replaced without replacing the developer at the same time.

Downloaded from www.Manualslib.com manuals search engine

What is Done During Potential Control?

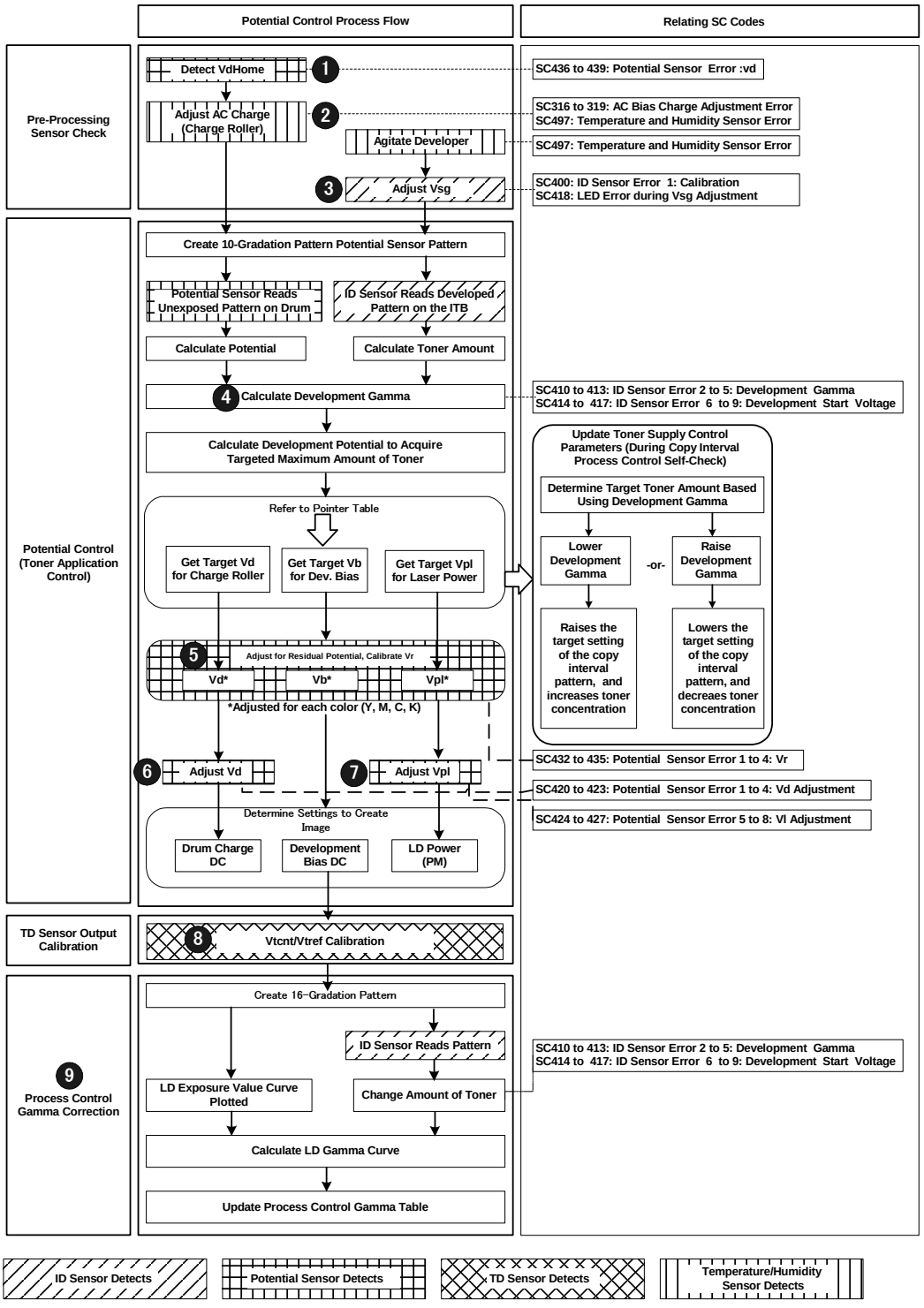

B132D988.WMF

Detailed Descriptions

Downloaded from www.Manualslib.com manuals search engine

First, a check confirms that all the PCU are set correctly.

NOTE: Please keep in mind that all the readings and calculations described below are done in each of the four PCUs. For simplicity, however, the discussions are limited to what occurs in a single PCU.

❶ Detect Vdhome

A charge of –700V is applied to the drum. The potential sensor detects the potential of the drum and checks if the potential sensor, drum, and charge roller are functioning normally.

If the charge is within the range –700V to –500V, the drum is functioning normally.

Potential Sensor Calibration Errors

SC Codes	SP3821 Procon OK?	For More Details:
SC436~SC439	15~17	See "Process Control Troubleshooting" in Section "4. Troubleshooting".

❷ Adjust AC Charge

The machine finds the current that is necessary for the optimum AC charge (Vpp). The optimum charge depends on the ambient temperature and humidity. The optimum charge for each temperature and humidity range is set with **SP2204** (ACC Charge Correction).

Insufficient charge causes white spotting and too much charge causes toner to film on the surface of the drum.

This check ensures that the average value of Vpp after 20 samplings is Vpp > 2.8 kV.

AC Charge Errors

SC Codes	SP3821 Procon OK?	For More Details:
SC316~SC319	31~32	See "Process Control Troubleshooting" in Section "4. Troubleshooting".

❸ Adjust Vsg

Before the gradated patterns are read, the strength of the ID sensor output (LED PWM) is adjusted to bring the value of Vsg_reg to the specified value.

An abnormal condition is detected when:

- Before Vsg adjustment begins, Vsg_reg < 0.5V
- After Vsg adjustment, Vsg_reg cannot be adjusted to 4.0±0.2V

ID Sensor Errors

SC Codes	SP3821 Procon OK?	For More Details:
SC400, SC418	21~23	See "Process Control Troubleshooting" in Section "4. Troubleshooting".

Downloaded from www.Manualslib.com manuals search engine

❹ Calculate Development Gamma

The laser diodes write a 10-grade potential sensor pattern on each drum. To make the different densities, the machine changes the PWM duty of the laser diodes.

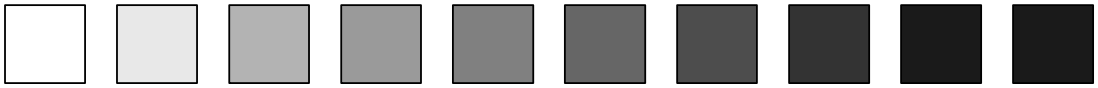

B132D925.WMF

At this step, the development gamma (development capacity) is measured. The necessary potentials are calculated. Next, the target values (necessary potentials) for Vd (charge potential), Vb (development bias), and Vpl (drum potential after exposure) are retrieved from the Potential Reference Table.

At this time:

- Development gamma must be in the range 0.3 to 6.0 V
- Development start voltage (Vk) must be in the range –150 to 150 V. This development start voltage is used to indicate whether the developer has deteriorated. However, this is only a rough measurement that can be affected by ambient conditions and the condition of other electrical components.

ID Sensor Pattern Detection Errors

SC Codes	SP3821 Procon OK?	For More Details:
SC410~SC413	55~56, 59	See "Process Control Troubleshooting" in Section "4. Troubleshooting".
SC414~SC417	57~58	

❺ Adjust for Residual Potential

The laser unit fires at full power (PM = +127, PWM = 63) to compensate for a possible high residual potential on the drum. Next, the amount of residual potential is detected, and the charge is adjusted to achieve the target potential.

The detected Vr must be less than –200V.

Vr (Residual Potential) Errors

SC Codes	SP3821 Procon OK?	For More Details:
SC432~SC435	62	See "Process Control Troubleshooting" in Section "4. Troubleshooting".

❻ Adjust Vd

This step adjusts Cdc, the charge applied to adjust dc bias target Vd✱. Vd✱ is the targeted bias after Vr (residual potential correction).

The targeted potential of Vd✱ must be within ±5V.

Vd (Development Bias) Errors

SC Codes	SP3821 Procon OK?	For More Details:
SC420~SC423	63	See "Process Control Troubleshooting" in Section "4. Troubleshooting".

Downloaded from www.Manualslib.com manuals search engine

❼ Adjust Vpl

The LD power is adjusted in order to get to the target Vpl✱ (the Vpl value after correction for Vr)

After correction for Vr, the value of Vpl✱ must be within ±5V.

Vpl (LD Power) Adjust Errors

SC Codes	SP3821 Procon OK?	For More Details:
SC424~SC427	64	See "Process Control Troubleshooting" in Section "4. Troubleshooting".

❽ Vtref/Vtcnt Calibration

Vtref calibration: Calibrates Vtref to the value of Vt

Vtcnt calibration: If Vt is not within the range of 2 to 3 V, Vtcnt is changed to bring it within this range.

This lets the machine use the results of the process control calculations to get the correct toner amount.

There is no check for abnormal conditions at this step.

❾ Process Control Gamma Correction

The following adjustments are done, based on the development gamma correction, to achieve the target values (Vd✱, Vl✱, Vb✱)

- To adjust Vd✱ (drum bias), the voltage of the charge roller is raised.
- To adjust Vl✱ (laser power), the input current of the laser diodes is raised.
- To adjust Vb✱ (development bias), the charge on the development roller is increased.

At this time:

- Development gamma must be in the range 0.3 to 6.0.
- Development start voltage must be in the range –150 to 150 V.

Potential Control Errors

SC Codes	For More Details:
SC410~SC417	See "Process Control Troubleshooting" in Section "4. Troubleshooting".

Downloaded from www.Manualslib.com manuals search engine

6.11.4 TONER SUPPLY CONTROL

Overview

The toner supply method can be selected with **SP3301 001-004**.

- 0: Fixed supply mode (used for testing only; do not use this mode except during some troubleshooting procedures as described in section 4)
- 1: PID (Proportional Integral Differentiation) control mode (default)

This section describes only PID control because only PID control is used in the field.

PID control uses inputs from pixel count, and from the TD and ID sensors. If the TD or ID sensor is broken, the machine uses PID control with inputs from pixel count only.

The following three functions comprise toner supply control for this machine.

1. At the end of every job (at the same time as potential control)

This is done if the number of pages since the previous toner supply control is more than the number that is set with SP 3551.

Black-and-white	After 250 pages (adjustable with **SP3551 001**)
Full color	After 200 pages (adjustable with **SP3551 002**)

Using the development gamma that was calculated during potential control, the machine determines the target amount of toner (M/A: Mass per Area):

- Low development gamma: Raises the target image density of the sensor pattern and increases the toner concentration.
- High development gamma: Lowers the target image density of the sensor pattern and decreases the toner concentration.

Downloaded from www.Manualslib.com manuals search engine

2. Page interval process control (Vsp detection between pages)

This function operates only when **SP3042 001** (Vtref correction) is set to "ON" (default). The Vsp ID sensor pattern is created between the page images on the ITB (Default: Every 10 pages). This interval can be adjusted with **SP3171**.

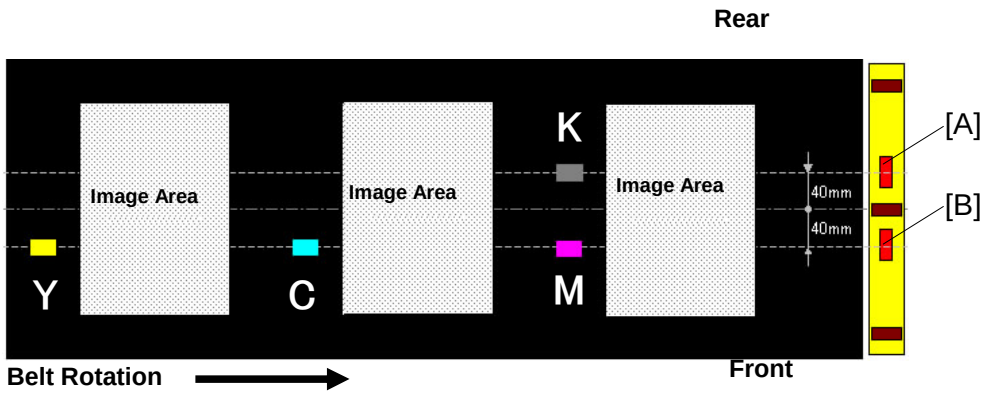

B132D919.WMF

[A]: ID Sensor – K
[B]: ID Sensor – Y, C, M

See Section 6.12.9 for the actual locations of the ID sensors.

The toner M/A (Mass per Area) is calculated from this sensor pattern after every 10th page:

Target M/A	K Toner	Uses the setting of **SP3161 001**.
	Y, M, C Toner	Uses the settings of **SP3531 002** to **004**

Toner supply is based on Vt - Vtref

- If the pattern is too dark (too much toner):
  → Vtref is increased → Toner supply amount decreases
- If the pattern is too light (not enough toner):
  → Vtref is reduced → Toner supply amount increases

Also, the TD sensor detection is done for every page:

- If Vt < Vtref, the toner supply amount is lowered.
- If Vt > Vtref, the toner supply amount is raised.

Downloaded from www.Manualslib.com manuals search engine

Toner Supply Operation Flow

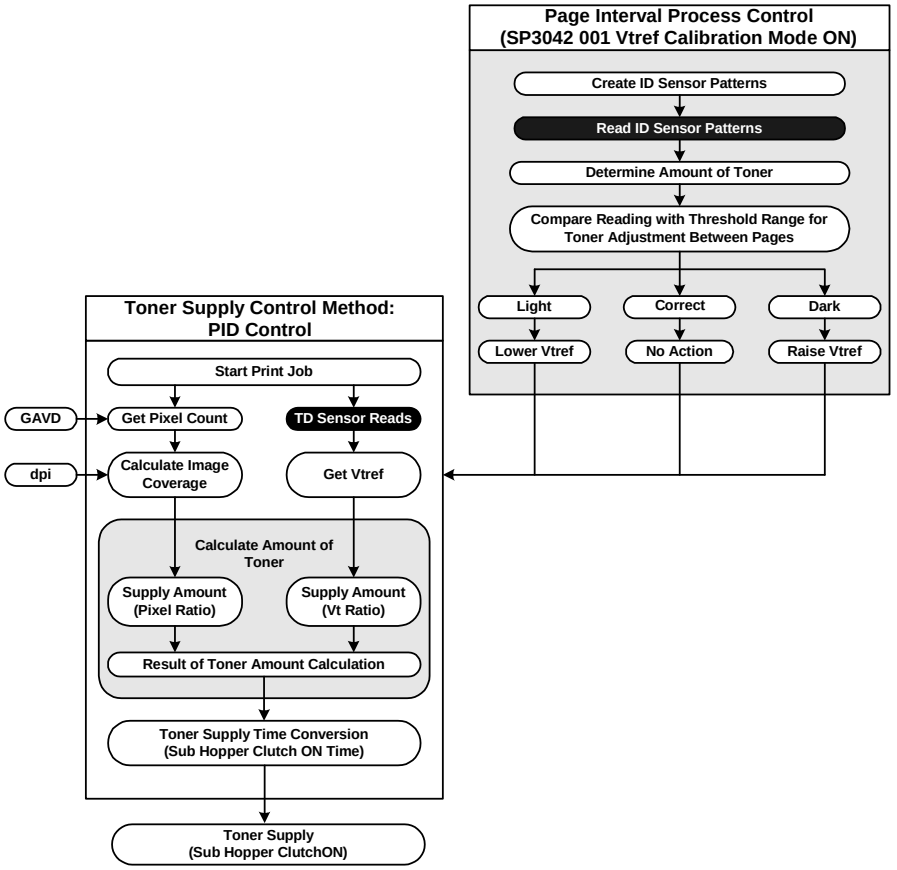

B132D921.WMF

Detailed Descriptions

Downloaded from www.Manualslib.com manuals search engine

6.12 IMAGE TRANSFER AND PAPER TRANSFER

6.12.1 OVERVIEW

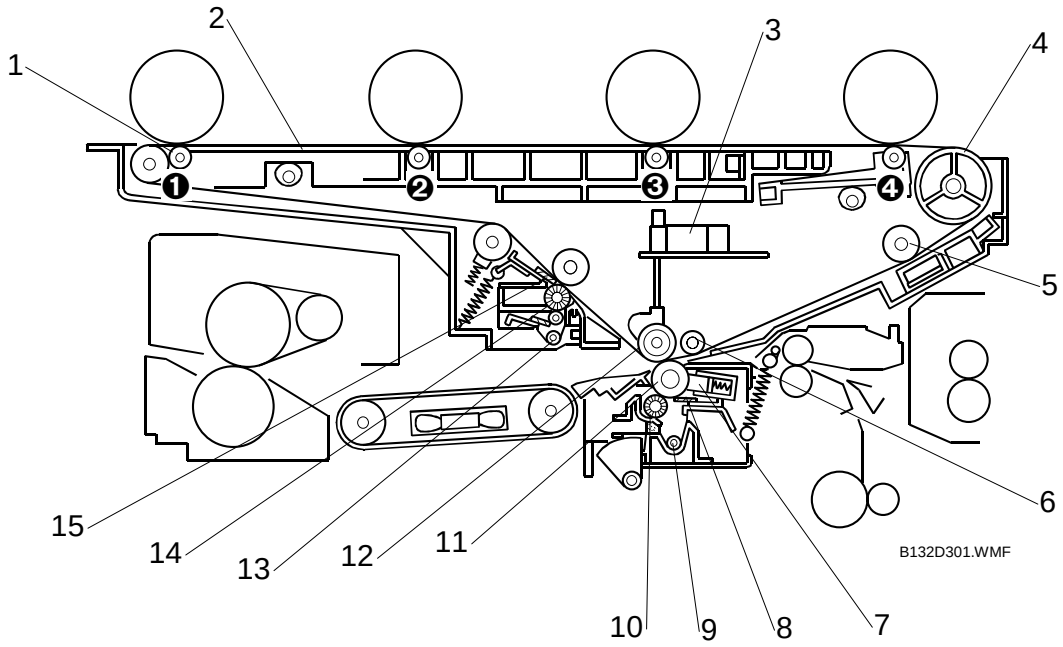

1. Image Transfer Rollers (❶ Y,❷ C,❸ M,❹ K)
2. ITB
3. Transfer Power Pack
4. ITB Drive Roller
5. ID/MUSIC Sensor Roller
6. Belt Pressure Roller
7. Lubricant Bar
8. PTR Cleaning Blade
9. PTR Waste Toner Collection Coil
10. PTR Cleaning Brush roller
11. PTR (Paper Transfer Roller)
12. ITB Bias Roller
13. ITB Waste Toner Collection Coil
14. ITB Cleaning Brush Roller
15. ITB Cleaning Blade

Downloaded from www.Manualslib.com manuals search engine

1. Image Transfer Rollers (❶ Y,❷ C,❸ M,❹ K)
   The positive charge applied by the transfer power pack to these sponge rollers (one for each PCU) pulls the developed images from the drums down onto the ITB.
2. ITB (Image Transfer Belt)
   Receives the toner images from the four drums and holds them until they are transferred to paper. During a full-color job, all the drums (Y, C, M, K) are in contact with the ITB. During a black-and-white job, the ITB is lowered and the Y, C, M drums separate from the ITB and only the black (K) drum contacts the ITB.
3. Transfer Power Pack
   Applies the positive bias to the image transfer rollers to pull the developed toner images off the drums and onto the ITB. Also applies a negative bias to the ITB bias roller to push the images off the ITB and onto the paper.
4. ITB Drive Roller
   The ITB drive motor turns this roller, which drives the ITB belt.
5. ID/MUSIC Sensor Roller
   This idle roller is directly opposite the two ID sensors and three MUSIC sensors. It ensures that the belt is positioned correctly close to the sensors for accurate readings of the ID sensor patterns and MUSIC patterns on the ITB.
6. Belt Pressure Roller
   Presses down on the ITB and paper to hold them in place as they enter the nip between the PTR and PTR idle roller (this is where the images are transferred from the ITB to paper).
7. Lubricant Bar
   Lubricates the PTR to facilitate cleaning.
8. PTR Cleaning Blade
   Removes residual toner on the PTR after the PTR cleaning brush roller cleans the PTR.
9. PTR Waste Toner Collection Coil
   Toner removed from the PTR by the PTR cleaning brush roller and PTR cleaning blade falls into the rotating coils. It is then moved to the transverse waste toner collection coil and finally to the waste toner bottle.
10. PTR Cleaning Brush roller
    Removes residual toner from the PTR after the image is transferred from the ITB to paper.

Downloaded from www.Manualslib.com manuals search engine

11. PTR (Paper Transfer Roller)
    Provides pressure when the ITB and paper pass between this roller and the PTR below during image transfer from ITB to paper.
12. ITB Bias Roller
    The transfer power pack applies a negative charge to this roller to push the negatively-charged toner image from the ITB to the paper.
13. ITB Waste Toner Collection Coil
    Toner removed from the ITB by the ITB cleaning brush roller and ITB cleaning blade falls into the rotating coils. It is then moved to the transverse waste toner collection coil and finally to the waste toner bottle.
14. ITB Cleaning Brush Roller
    Removes residual toner from the ITB after the image is transferred from the ITB to paper.
15. ITB Cleaning Blade
    Removes residual toner from the belt after the ITB cleaning brush roller cleans the belt.

Downloaded from www.Manualslib.com manuals search engine

6.12.2 ITB DRIVE

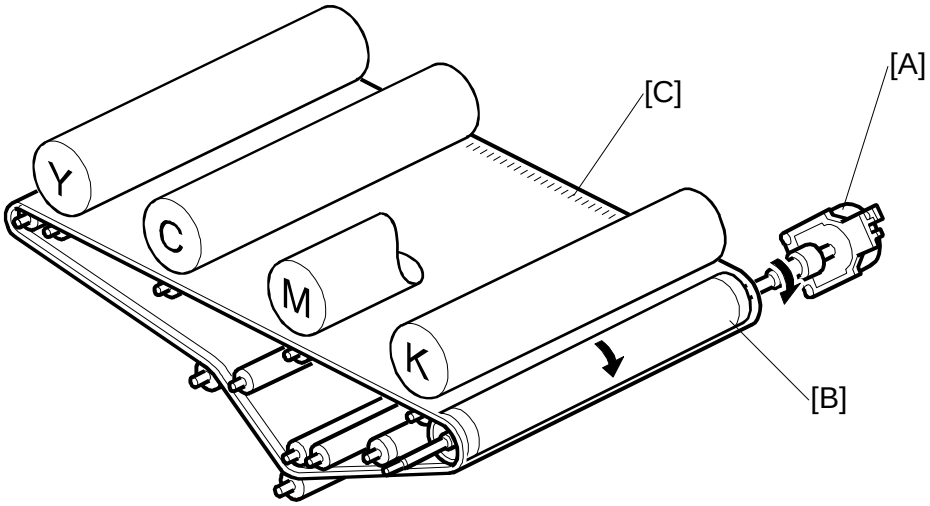

B132D307.WMF

[A]: ITB drive motor
[B]: ITB drive roller
[C]: ITB

The ITB drive motor [A] drives the ITB drive roller [B]. All the other rollers inside the ITB are idle rollers.

Downloaded from www.Manualslib.com manuals search engine

6.12.3 ITB LIFT

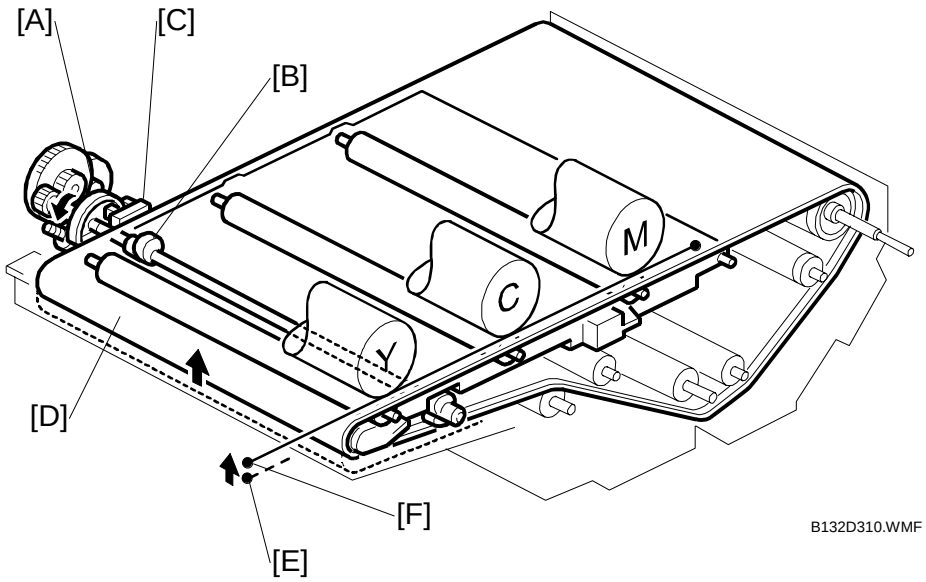

[A]: ITB lift motor
[B]: ITB lift cam
[C]: ITB lift sensor
[D]: ITB
[E]: Black print position
[F]: Full-color print position

The ITB lift motor [A] (a stepper motor) turns the ITB lift cam [B]. This cam lifts and lowers the ITB [D]. The operation of the ITB lift motor is controlled by the ITB lift sensor [C].

When the machine is turned ON, the ITB stays at position [E]. The Y, C, M drums are separated from the ITB.

When Full Color Mode is Selected:

- The motor turns the cam until the actuator goes into the ITB lift sensor.
- The motor stops.
- The raised cam holds the ITB at position [F]. All drums (Y, C, M, K) contact the ITB.
- The machine automatically adjusts the paper feed timing for full color copying with all the drums.
- While the Y, M, C drums are separated from the ITB, they do not turn. This reduces wear on these drums while they are not being used.

Downloaded from www.Manualslib.com manuals search engine

When Black-and-White Mode is Selected:

- The motor turns the cam until the actuator goes out of the ITB lift sensor.
- The motor stops.
- With the left side of the ITB down, only the black (K) drum contacts the ITB.
- The machine automatically adjusts paper feed timing for black-and-white copying with only one drum.
- The ITB stays down until the next full-color job starts

When ACS Mode is Selected:

If the job has color pages and black-and-white pages, the ITB operation is controlled by **SP 5880 001**.

- The default is 0 (low productivity). In this mode, the ITB changes position each time the page type changes. This makes printing slower, but decreases wear on the color PCUs.
- If you set the SP to 1, then the machine will not move away from the color PCUs if a black-and-white page is next. This makes printing faster, but increases wear on the color PCUs.

Downloaded from www.Manualslib.com manuals search engine

6.12.4 TRANSFER POWER PACK

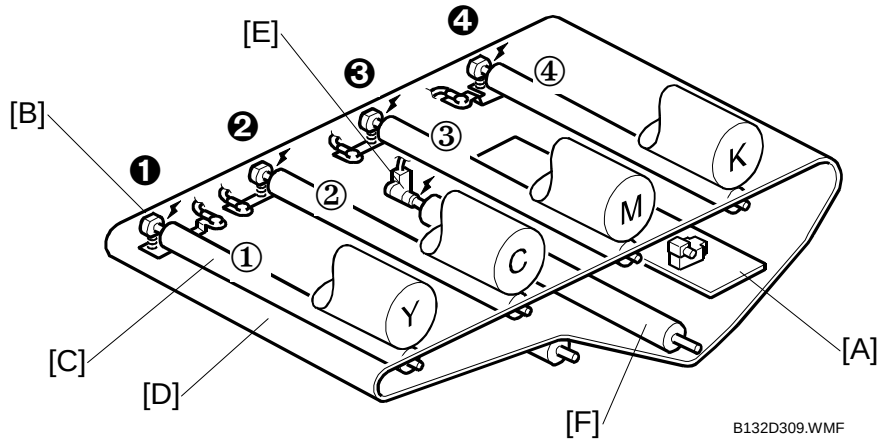

[A]: Transfer power pack
[B]: Image transfer roller terminals ❶, ❷, ❸, ❹
[C]: Image transfer rollers ①, ②, ③, ④
[D]: ITB
[E]: ITB bias roller terminal
[F]: ITB bias roller

To transfer the images from drum to ITB:

- The transfer power pack [A] supplies a positive charge (1 kV 24 to 30 µA) to the image transfer roller terminals [B] ❶, ❷, ❸, ❹.
- The four terminals charge the image transfer rollers [C] ①, ②, ③, ④ which transfer the charge to the back of the ITB [D].
- The positively charged ITB pulls the negatively charged toner off the drums and onto the ITB.

To transfer the images from ITB to paper:

- The transfer power pack [A] supplies a negative charge to the ITB bias roller terminal [E].
- The terminal applies the negative charge to the ITB bias roller [F].
- The high negative charge of the ITB bias roller is applied to the back of the ITB. This repulses the low negative charge of the toner, forcing the images onto the paper.

NOTE

- The transfer power pack supplies the positive charge for image transfer to the ITB and the negative charge for image transfer from the ITB to paper.
- A temperature/humidity sensor under the waste toner bottle motor controls the amount of the charge applied to the image transfer and ITB bias rollers.

Downloaded from www.Manualslib.com manuals search engine

6.12.5 PAPER TRANSFER AND SEPARATION

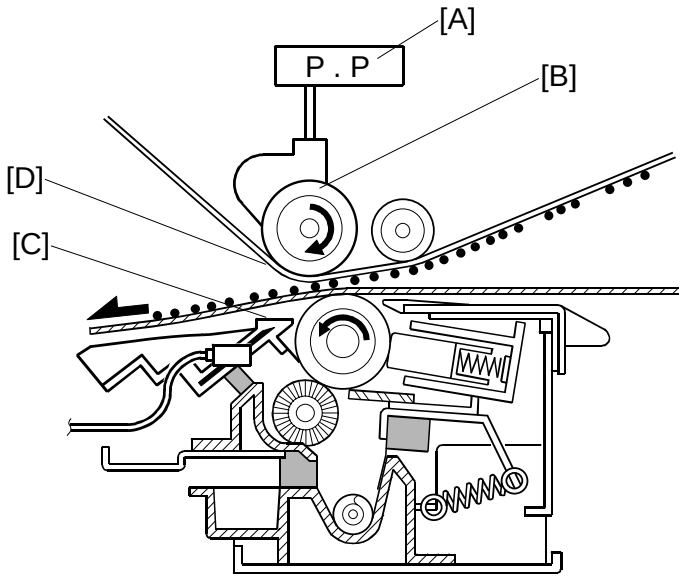

B132D304.WMF

This machine employs a *repulsive force bias system* to transfer the image on the ITB to paper.

The transfer power pack [A] applies a negative bias to the ITB bias roller [B].

The negative bias from the back side of the ITB applies a repulsive force to the toner on the ITB surface. This repulsive force pushes the toner from the ITB surface onto the paper.

This system has two advantages:

- The repulsive bias from the front side of the paper has no effect on the moisture in the paper.
- Because the bias is applied from the front side of the paper, the bias can be applied more effectively, regardless of the level of humidity around the paper.

After the image has been transferred to the paper:

- The paper discharge plate [C] (connected to the separation power pack) applies an ac charge to neutralize the charges on the paper and the ITB.
- Next, curvature separation at [D] separates the paper from the ITB when the ITB makes its abrupt turn toward the top of the machine for the next copy cycle.

Downloaded from www.Manualslib.com manuals search engine

6.12.6 PTR CLEANING

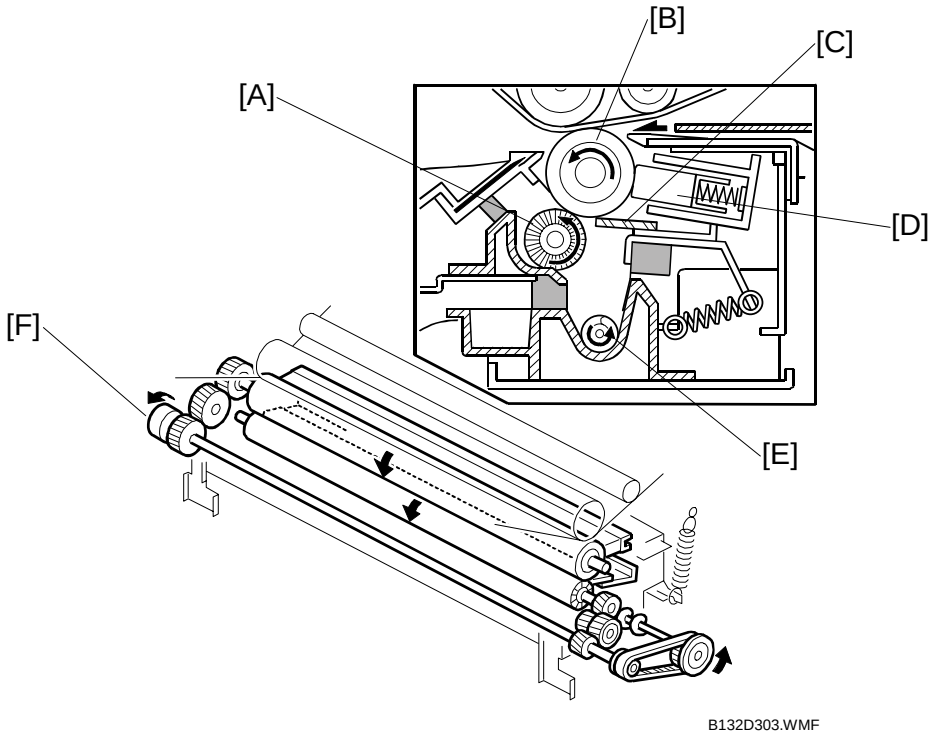

[A]: PTR cleaning brush roller
[B]: PTR (Paper Transfer Roller)
[C]: PTR cleaning blade
[D]: PTR lubricant bar
[E]: PTR waste toner collection coil
[F]: PTR motor

The PTR cleaning brush roller [A], driven by the PTR motor [F], removes toner from the PTR [B] because these rollers rotate in opposite directions.

The PTR cleaning blade [C] removes toner that remains after brush cleaning.

The PTR lubricant bar [D] lubricates the surface of the PTR to facilitate cleaning.

The removed toner falls into the PTR waste toner collection coil [E]. The coils move the toner to the transverse waste toner collection coil at the back of the machine, and this coil sends the waste toner to the waste toner bottle.

Downloaded from www.Manualslib.com manuals search engine

6.12.7 ITB CLEANING

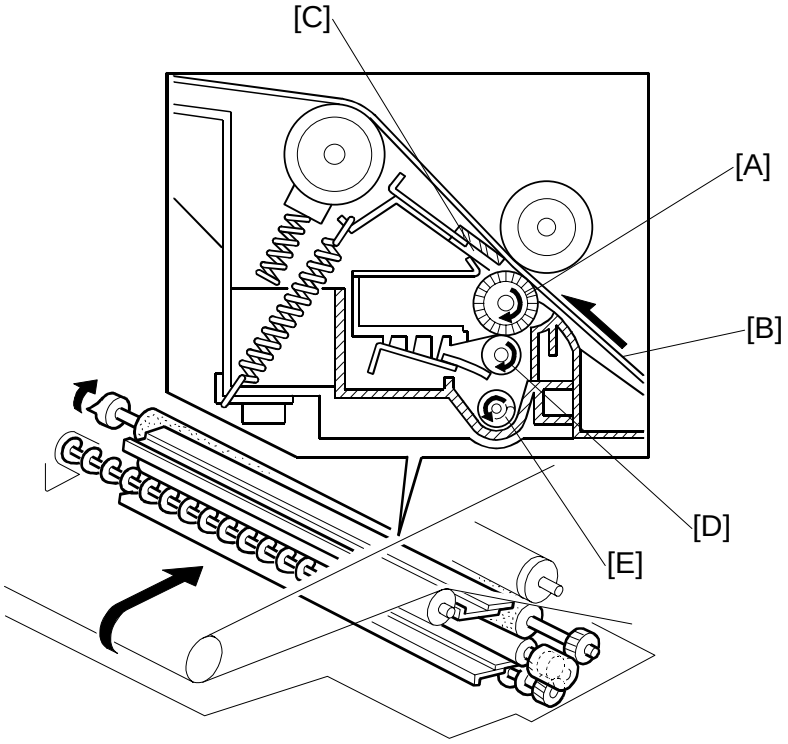

B132D306.WMF

[A]: ITB cleaning brush roller
[B]: ITB (Image Transfer Belt)
[C]: ITB cleaning blade
[D]: Brush roller cleaning roller
[E]: Waste toner collection coil

The PTR motor (☛6.12.6) rotates the ITB cleaning brush roller [A] against the bottom of the ITB [B] while it passes above.

The ITB cleaning blade [C] removes toner that remains on the belt after the ITB cleaning brush roller cleaning.

The brush roller cleaning roller [D] removes toner from the rotating cleaning brush roller.

Toner removed from the ITB falls into the rotating waste toner collection coil [E]. The coil moves the toner to the transverse waste toner collection coil at the back of the machine. This coil sends the waste toner to the waste toner bottle.

There is no lubricant bar.

Downloaded from www.Manualslib.com manuals search engine

6.12.8 ITB SPEED CONTROL

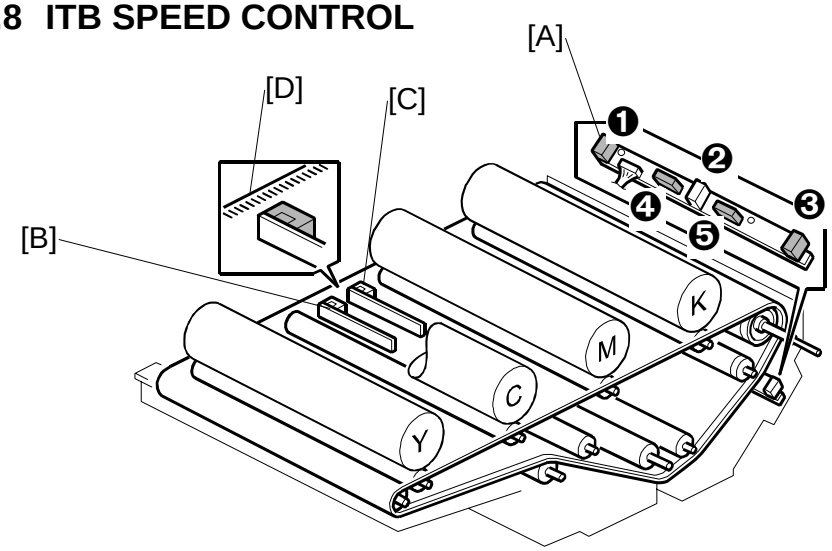

B132D308.WMF

[A]: MUSIC sensors ❶, ❷, ❸
ID Sensor – K ❹, ID Sensor Y, M, C ❺ (☛6.7.4, ☛6.11.3)
[B]: ITB position sensor 1
[C]: ITB position sensor 2
[D]: ITB encoder strip scale

For full color and black-and-white printing on plain paper, and for thin paper, the ITB speed is 282 mm/s.

For OHPs, and Thick Paper 1 and 2, the speed is 141 mm/s (1/2 speed).

NOTE: For OHPs, the fusing unit line speed is 100 mm/s (1/3 speed). (☛6.14.1)

The machine uses three MUSIC sensors [A] to control the speed of the drum motor to prevent color registration errors during full color printing. (See section 6.7.4.)

There are two ITB position sensors 1 [B] and 2 [C] above the encoder strip scale [D] on the rear edge of the ITB.

- ITB position sensor 1 monitors the belt speed. The CPU uses this information to adjust the speed of the belt to account for eccentricity of the image transfer roller, differences in the thickness of the belt, belt slippage, and the load placed on the ITB by friction between the rollers at paper transfer.
- ITB position sensor 2, located 20 mm from sensor 1, ensures that the number of gradations on the edge of the ITB in this 20 mm gap remain constant. This detects stretching or shrinking of the belt, and the ITB drive motor speed is adjusted to compensate.

Downloaded from www.Manualslib.com manuals search engine

6.12.9 ITB VENTILATION

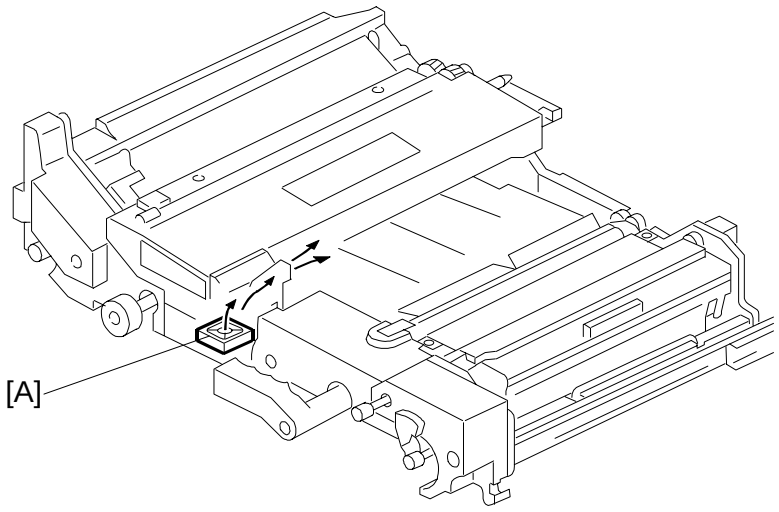

B132D967.WMF

The image transfer fan [A] draws in cool air and blows it across the top of the drawer unit to cool the ITB.

Downloaded from www.Manualslib.com manuals search engine

6.13 PAPER FEED

6.13.1 OVERVIEW

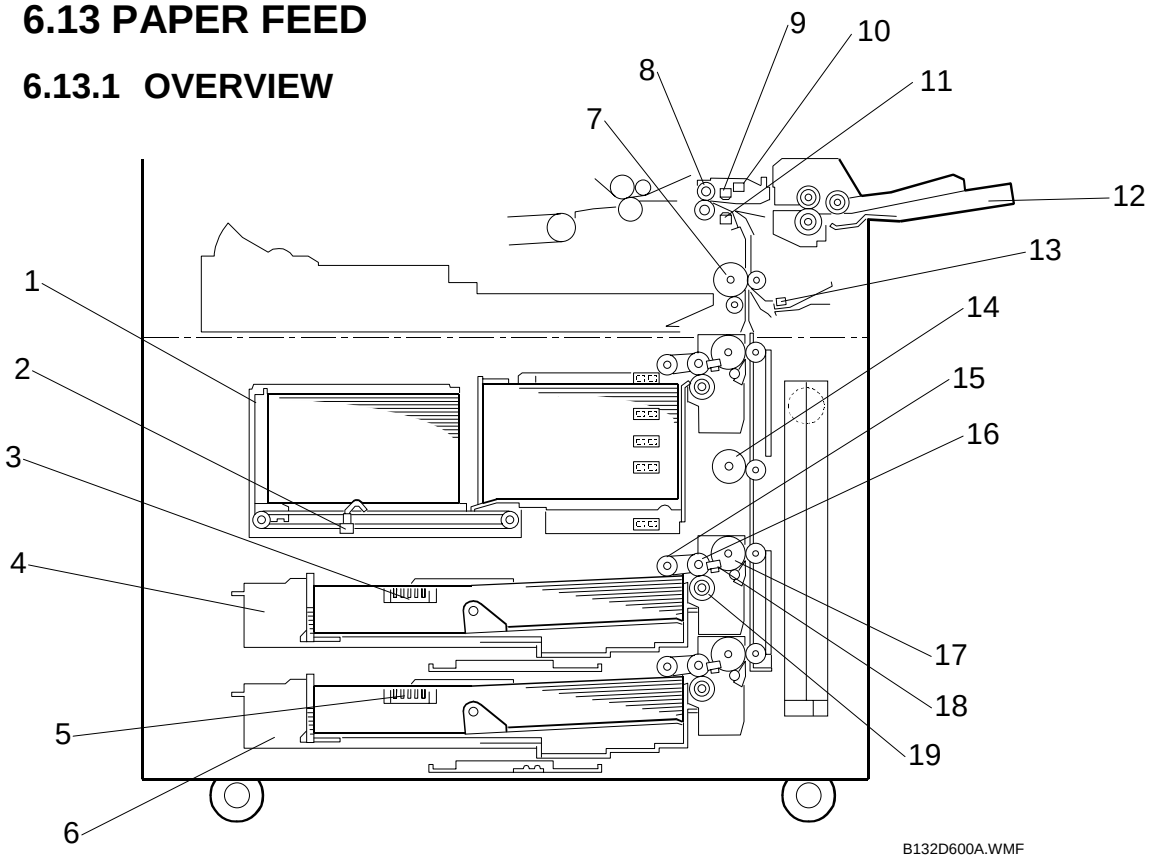

1. Tandem Tray (Tray 1)
2. Left Tray Paper Sensor
3. Paper Size Switch (Tray 2)
4. Universal Tray (Tray 2)
5. Paper Size Switch (Tray 3)
6. Universal Tray (Tray 3)
7. Upper Relay Roller
8. Registration Roller
9. Double-Feed detection Sensor
10. Registration Sensor
11. Double Feed Detection LED
12. Bypass Tray
13. Relay Sensor
14. Lower Relay Roller
15. Pick Up Roller
16. Feed Roller
17. Grip Roller
18. Paper Feed Sensor
19. Separation Roller

NOTE: Items 15 to 19 use the standard FRR feed system, which is used for Trays 1, 2, and 3. This machine uses motor ON/OFF time (not clutches) to control paper feed.

Downloaded from www.Manualslib.com manuals search engine

Tray Capacities

The machine has four paper trays:

- Tandem Tray (Tray 1). 1550 + 1550 sheets
- Universal Tray (Tray 2) 550 sheets
- Universal Tray (Tray 3) 550 sheets
- Bypass tray. 100 sheets.

Built-in Feed Stations

- **Paper feed and separation**. Standard FRR system with a torque limiter for paper separation and feed. Each tray has an independent stepper motor to drive its paper feed mechanisms. CT Handling Paper> Paper Feed Methods> Forward and Separation Roller (FRR)
- **Tray lift motors**. Provided for each tray, easily disengage when a tray is removed and engage once again when the tray is re-installed. In trays 2 and 3, the lift of the motors on the bottom plates is also used for paper near-end detection.
- **Tandem tray paper end**. A sensor near the top of the right rail detects paper near end and another sensor under the bottom tray detects paper end after the last sheet is fed. Three paper height sensors, on the left rail, are actuated as the actuator rises with the bottom plate. The combinations of actuating and de-actuating these sensors as the plate rises are used to detect the paper supply display on the operation panel.
- **Paper size detection**. For the tandem tray (Tray 1), an SP setting is required (**SP 5959 001**). For the universal trays (Tray 2, 3), there is size detection switch on each tray.
- **Vertical Transport**. A grip roller at each feed station feeds the paper into the vertical paper path.
- **Heaters**. There are two anti-condensation heaters for the built-in paper feed stations.

Bypass Feed

- **Capacity**: 100 sheets.
- **Paper feed and separation**: Standard FRR system with a torque limiter for paper separation and feed. Bypass tray motor and clutch.
- **Paper end detection**: Photointerrupter and feeler.
- **Size detection**: Side fence is used for width detection, registration sensor pulse count is used for length detection.
- **Thick paper feed**: The bypass feed clutch switches on twice.

Paper Registration

- Paper is guided to the registration roller from five sources: the 3 built-in paper trays, 1 bypass tray, and 1 duplex tray.
- There is a mylar strip over the entire length of the registration roller.

Jam Removal

Pulling out a paper tray releases the pressure on the rollers, making it easy to remove paper jams.

Downloaded from www.Manualslib.com manuals search engine

6.13.2 DRIVE

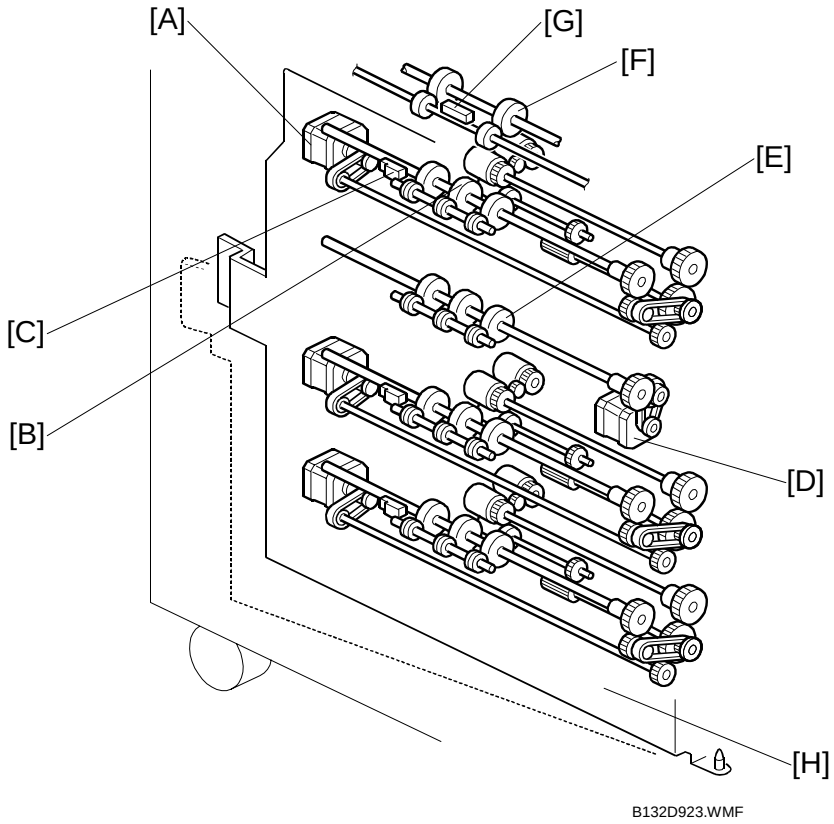

B132D923.WMF

An independent paper feed motor [A] drives the rollers in each tray. The motor also drives grip rollers [B], which pull the paper out of the tray. This mechanism is identical for each tray.

A vertical transport sensor [C] at each feed station detects paper jams.

The paper feed motors of each tray drive the vertical transport rollers, opposite to each feed station (not shown).

The lower relay motor [D] drives the lower relay roller [E], halfway between trays 1 and 2. The lower relay roller is added here because the paper path is very long.

The upper relay roller [F] feeds each sheet to the registration roller. The bypass feed motor (not shown) drives the upper relay roller [F].

The relay sensor [G], at the top of the vertical transport path, triggers the start of image exposure on the OPC drum, and detects jams in the paper path.

The transport guide plate [H] swings against the side of the machine and locks in place.

Downloaded from www.Manualslib.com manuals search engine

6.13.3 TRAY AND PAPER LIFT MECHANISM – TRAY 2,3

Bottom Plate Lift

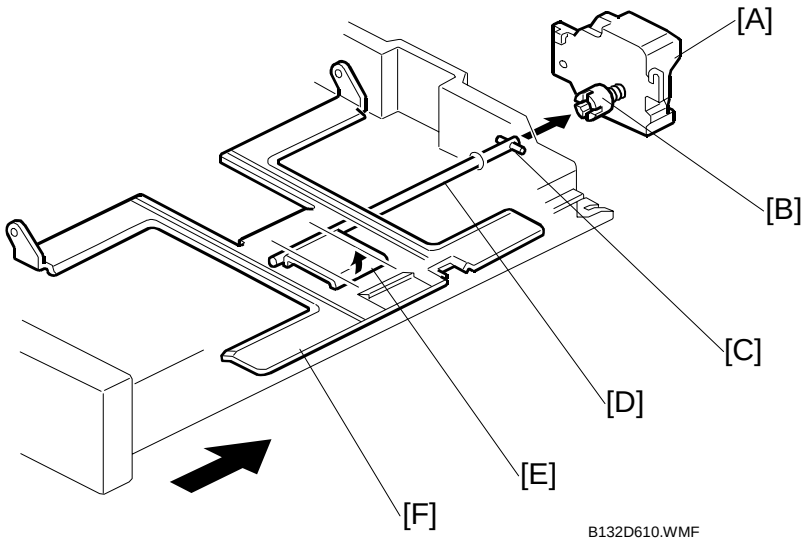

Tray lift operates in this order:

[A]: Tray lift motor switches on
[B]: Coupling rotates
[C]: Pin locks coupling at shaft
[D]: Shaft rotates
[E]: Lift arm raised by the rotation of the shaft
[F]: Bottom plate pushed up by lift arm

NOTE: The universal trays (Tray 2, Tray 3) each have a paper near end sensor inside the lift motor assembly. The sensor measures the angle of the lift shaft. There are four possible readings from this sensor, to indicate four levels of remaining paper.

Downloaded from www.Manualslib.com manuals search engine

Lift Sensor

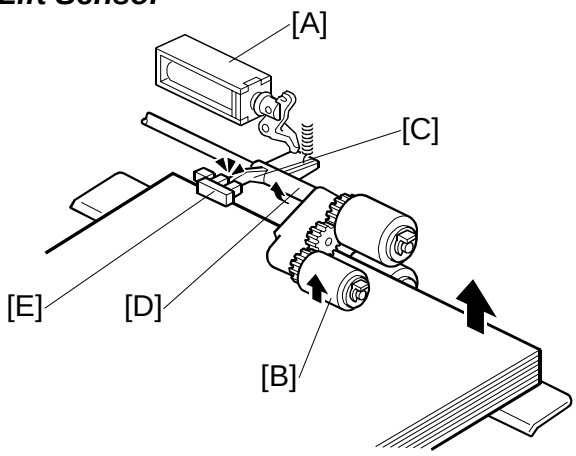

B132D934.WMF

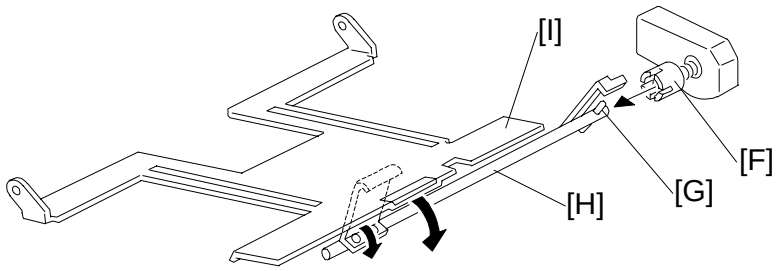

B132D935.WMF

Tray lift motor → on, pick-up solenoid [A] → on, pick-up roller [B] lowers.

When the top sheet of paper reaches the proper paper feed level, actuator [C] on the pick-up roller support [D] activates the tray lift sensor [E], and the lift motor stops.

After several paper feeds, the paper level gradually lowers and the lift sensor de-activates. Next, the lift motor turns on again until the lift sensor once again activates.

When the tray is pulled out of the feed unit, coupling [F] disengages pin [G] on shaft [H], and the tray bottom plate [I] drops by its own weight.

Downloaded from www.Manualslib.com manuals search engine

6.13.4 PAPER FEED AND SEPARATION MECHANISM

Feed and Separation at Standby: No Paper Present

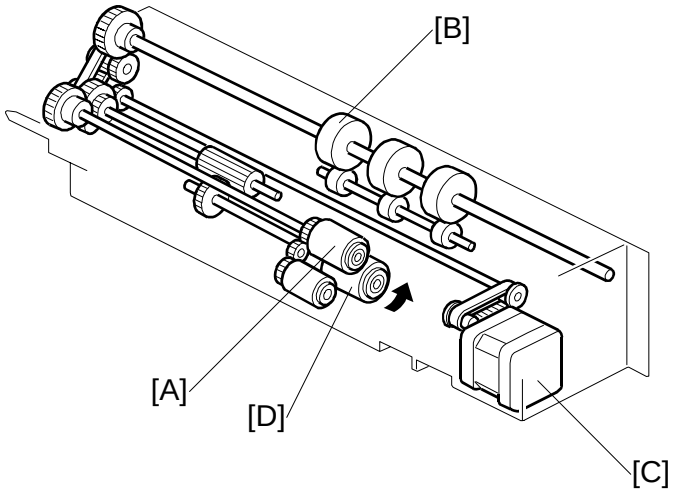

B132D936.WMF

While waiting for the first sheet to feed and between sheets, the feed roller [A] must not rotate. However, the grip roller [B] must turn, so that any paper coming up the vertical transport path can continue to feed. To do this, the paper feed motor [C] rotates in reverse. The feed roller cannot turn because of a one-way clutch. The separation roller [D] is free to rotate in the direction shown by the arrow, because the separation roller solenoid is OFF.

When the feed motor reverses:

Feed roller [A]	→	No rotation
Separation roller [D]	→	Free to rotate
Grip roller [B]	→	Rotates

The feed motor cannot be replaced easily. Because of this, an assembly is available as a spare part.

Downloaded from www.Manualslib.com manuals search engine

Paper Feed and Separation

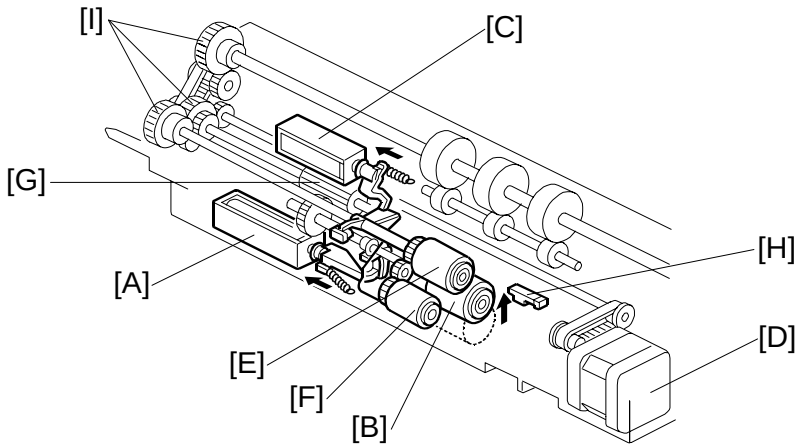

If a paper feed station is not selected, its separation roller solenoid [A] stays off and the separation roller [B] can turn freely.

When the paper feed station is selected and the start key is pressed, the following mechanisms activate:

- Separation roller solenoid [A] → separation roller [B] contacts feed roller [E]
- Pick-up solenoid [C] → pick-up roller [F] lowers to contact the paper
- Paper feed motor [D] → turns feed roller [E] → turns pick-up roller [F] via gear [G]

When the paper feed sensor [H] detects the leading edge of the paper:

- Pick-up solenoid [C] switches off, and pick-up roller [F] lifts.
- The feed roller [E] then feeds the sheet to the registration roller.

Note the three one-way clutches [I]: One for the grip roller, one for the feed roller, and one for the gear [G], which drives the pickup roller.

When the feed motor rotates forward:

Feed roller	→	Rotates
Separation roller	→	Rotates in accordance with the FRR principle CT Handling Paper> Paper Feed Methods> **Forward and Reverse Roller (FRR)**
Grip roller	→	Rotates

Downloaded from www.Manualslib.com manuals search engine

Separation Roller Release Mechanism

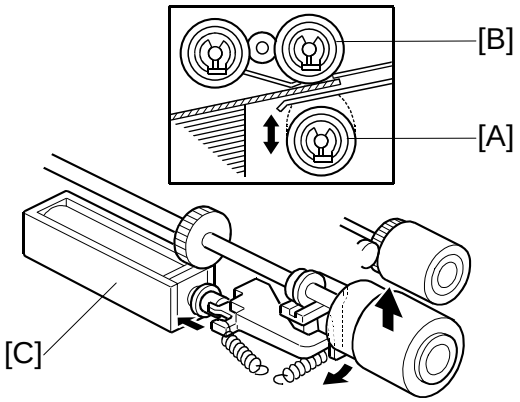

B132D938.WMF

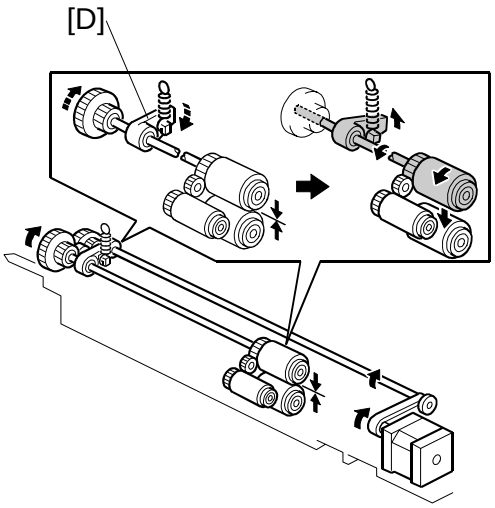

B132D939.WMF

Normally, the separation roller [A] and feed roller [B] are not in contact. However, when the feed station is selected, the separation roller solenoid [C] pushes the separation roller against the feed roller.

This mechanism has advantages:

- When the paper feed motor turns on, the separation roller rotates. If the separation roller is away from the feed roller, it reduces the load on the paper feed motor and drive mechanism, and it also reduces wear to the rubber surface of the separation roller caused by friction between the separation roller and the feed roller.
- After a job, paper sometimes remains between the feed and separation rollers. If the paper tray is pulled out of the machine, this paper might be torn if the two rollers do not separate.
- The operator can easily pull out jammed paper between the feed and separation rollers if the separation roller is away from the feed roller.

Normally, the feed and separation roller separate when the separation roller solenoid switches off.

However, if the rollers stick together after paper passes between them, the separation roller could rotate the feed roller in reverse before the motor and solenoid switch off. To prevent this, if the feed roller starts to reverse, a small brake arm [D] on the feed roller shaft rotates down, strikes a stopper, and drives the feed roller forward slightly to separate it from the separation roller below.

The rollers are composed of rubber and may stick occasionally. This mechanism prevents excessive wear on the rollers.

Downloaded from www.Manualslib.com manuals search engine

6.13.5 PAPER NEAR-END AND PAPER END – TRAYS 2 AND 3

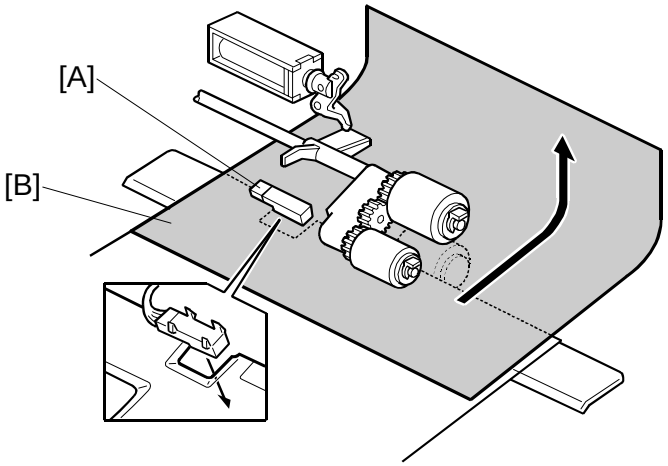

B132D940.WMF

The paper near end sensor [A] is in the lift motor assembly. It can detect four levels of remaining paper.

The paper end sensor [A] receives light reflected from the paper below [B] until the last sheet has been fed. Then, paper end is detected.

Downloaded from www.Manualslib.com manuals search engine

6.13.6 PAPER SIZE DETECTION

Tandem Tray (Tray 1)

The tandem tray does not have paper size switches. Every time the paper size is changed by moving the front and back fences, you must enter the selected paper size with **SP5959-001**.

Universal Trays (Tray 2, 3)

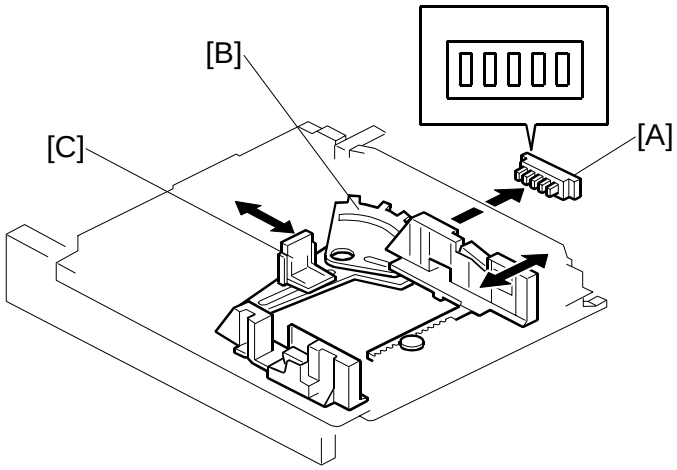

The output from the switch depends on the position of the dial (see the table on the following page)

The paper size switch [A] detects the paper size with 5 microswitches. The actuator plate [B], attached to the rear of the paper tray, actuates the paper size switch, and the side fence [C] changes position.

Downloaded from www.Manualslib.com manuals search engine

Paper Size Switch Output

Paper	Size	Switch
12" x 18" SEF	12" x 18"	11111
A3 SEF	297 x 420 mm	11001
B4 SEF	257 x 394 mm	10011
A4 SEF	210 x 297 mm	01001
A4 LEF	210 x 297 mm	11000
B5 SEF	182 x 257 mm	10101
B5 LEF	182 x 257 mm	00011
A5 SEF	148 x 210 mm	11101
A5 LEF	148 x 210 mm	01101
DLT	11" x 17"	11100
LG SEF	8½" x 14"	10110
LT SEF	8½" x 11"	11010
LT LEF	8½" x 11"	01100
HLT SEF	5½" x 8½ "	01110
HLT LEF	5½" x 8½ "	11110
F4	8½" x 13"	11011
Folio	8¼" x 13"	01011
F	8" x 13"	01111
Executive LEF	7¼" x 10 ½"	10100
Executive SEF	7¼" x 10 ½"	00111
8-Kai	267 x 390 mm	00110
16-Kai LEF	267 x 195 mm	10010
16-Kai SEF	195 x 267 mm	10111

0: OFF (Sensor Output HIGH)
1: ON (Sensor Output LOW)

If the user does not put the fences at the correct position, a jam can occur.

To use a paper size that is not in this table, select the size with this user tool: System Settings> Tray Paper Size. If the paper size is not the same as the setting, a jam can occur. Note that SP 5112 must be set to ‘enabled’ or non-standard sizes cannot be selected for trays 2 and 3.

Downloaded from www.Manualslib.com manuals search engine

6.13.7 PAPER TRAY HEATERS

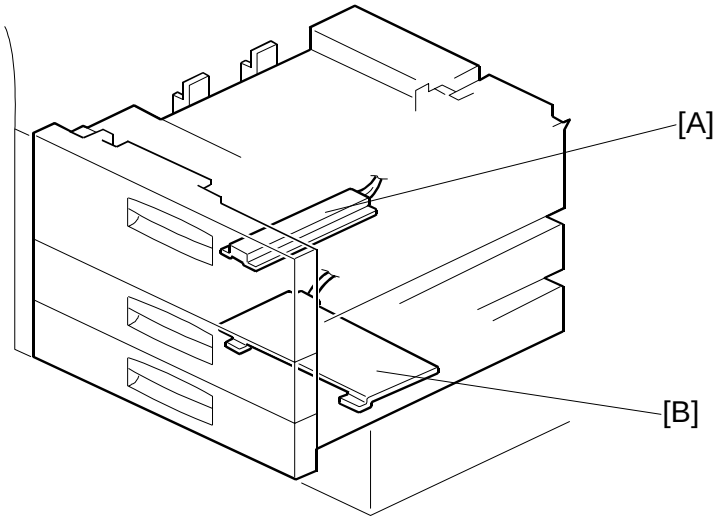

B132D608A.WMF

Two heaters, one below the tandem tray [A] and one below the bottom tray [B], prevent condensation around the feed rollers and keep paper dry.

This tray heater turns on automatically:

- When the main power switch is turned off
- When the machine enters auto off mode

NOTE: These tray heaters are not connected before the machine is shipped from the factory. The heaters are installed in the machine but their connection is optional. If the trays are needed, you must connect them at machine installation or at any time after installation. For more see Section "1. Installation".

Downloaded from www.Manualslib.com manuals search engine

6.13.8 TANDEM TRAY – TRAY 1

Overview

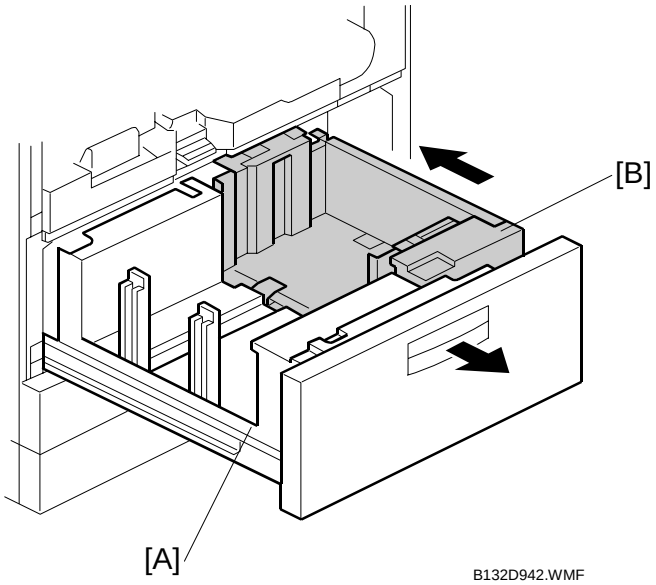

The left tray [A] and right tray [B] each hold 1,550 sheets. Paper feeds from the right tray. When the paper in the right tray runs out, paper in the left tray is automatically pushed into the right tray and paper feed resumes.

Normally, both the right and the left trays are joined together. However, if there is no paper in the left tray during copying, the left tray can be pulled out to load paper without interrupting the copy job in progress. The right tray remains in the machine and paper feed continues.

Downloaded from www.Manualslib.com manuals search engine

Connecting the Left and Right Sides of the Tray

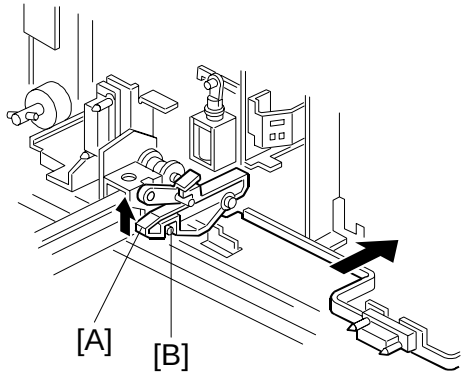

B132D943.WMF

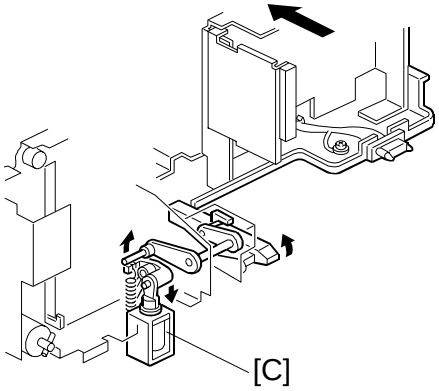

B132D944.WMF

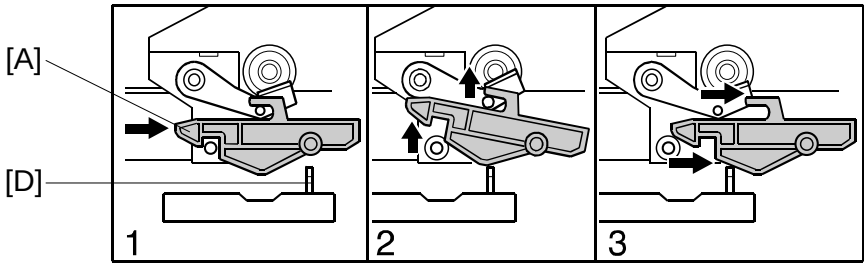

B132D945.WMF

When there is paper in the left tray, lock lever [A] in the left tray catches the pin [B] in the right tray.

During copying if there is no paper in the left tray:

- Right tray lock solenoid [C] turns on, which releases lock lever [A].
- The left tray can be pulled out to load paper, even while paper is feeding from the right tray.

When the tandem tray is drawn out fully while the machine is not copying, projection [D] pushes up lock lever [A] so both trays separate. This makes paper loading easier.

Downloaded from www.Manualslib.com manuals search engine

Paper Lift/Remaining Paper Detection

The machine detects when the tray 1 has been placed in the machine by monitoring the tray set signal through the connector.

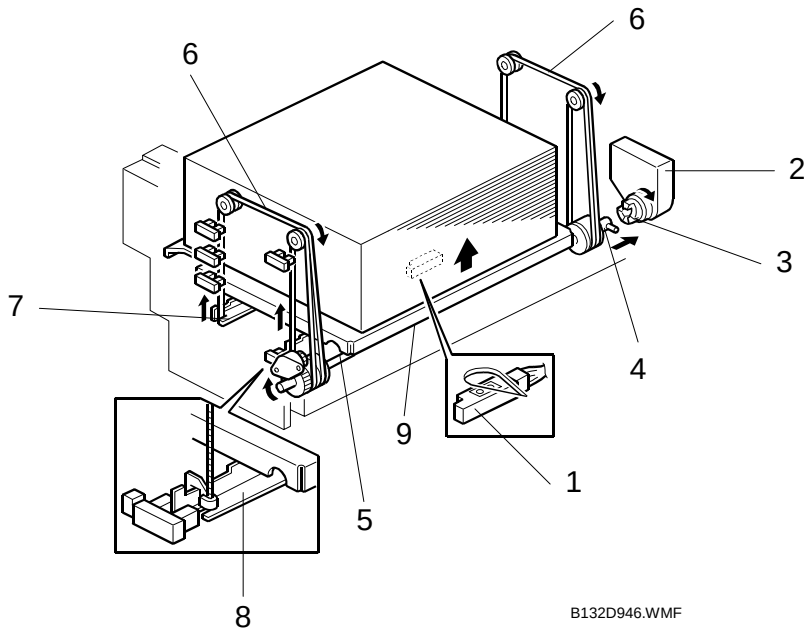

When the machine detects that the tray is in the machine, the right tray paper sensor [1] (under the tray) checks immediately whether there is paper in the right tandem tray.

NOTE: This immediate detection saves time. If sensor [1] was not present and the tray was empty, the bottom plate would have to lift until the 1st tray lift paper end sensor (at the top of the tray) detected that there was no paper.

The lift operation begins as soon as paper is detected:

Tray 1 Lift motor [2] → Coupling gear [3] → Pin [4] on the lift shaft [5] → Wires [6] → Slots at the ends of the tray support rods [7], [8] → Tray bottom plate [9].

The tray goes up until both of the following occur:

- The paper pushes up the pick-up roller and the lift sensor is activated
- The paper end sensor at the top of the tray is deactivated.

Downloaded from www.Manualslib.com manuals search engine

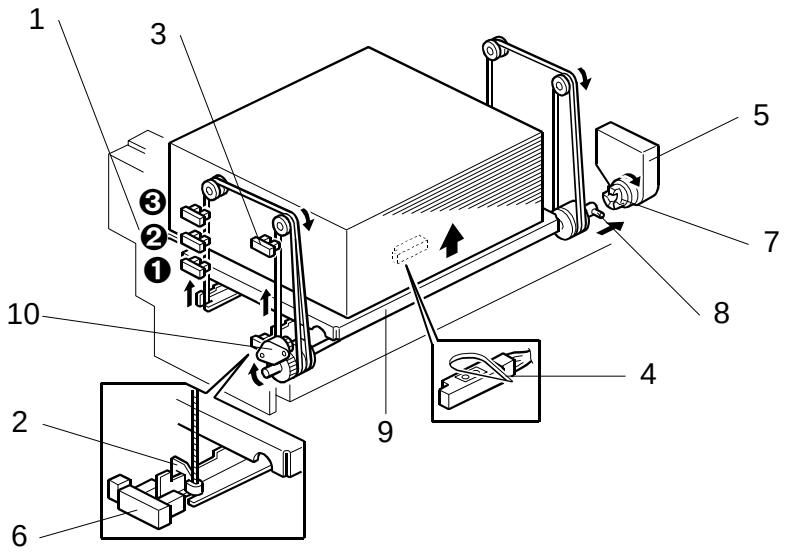

B132D947.WMF

Paper remaining: The amount of paper remaining in the tray is detected by which combination of the three paper height sensors [1] ❶, ❷, ❸ are actuated by the actuator on the left rail as the bottom plate rises.

- With the actuator below paper height sensor ❶ (the bottom sensor), no sensor is actuated and the display indicates the tray is full.
- When the actuator passes paper height sensor ❶, the display indicates 50% of the paper supply remaining.
- When the actuator passes paper height sensor ❷ (the middle sensor), the display indicates 30% of the paper supply remaining.
- When the actuator passes paper height sensor ❸ (the top sensor), the display does not change. This prevents the signal from returning to the off state, which would indicate 100% of the paper remaining (the same state as when the actuator is below the paper height sensor ❶).

Paper near-end: Detected when the actuator [2] on the right rail activates the paper near end sensor [3]. When the actuator passes this sensor, the display indicates 10% of the paper supply remaining.

Paper end: After the last sheet feeds, the right tray paper sensor [4] below the bottom of the tray actuates and signals paper end. When paper runs out in the right tray, the stack must be moved across from the left tray. To do that, the tray must first be lowered. The tray lift motor [5] reverses until actuator [2] activates the right tray down sensor [6].

When removing the tray manually, if paper is still present, the tray lowers under its own weight as follows:

- Coupling [7] separates from pin [8] ➔ Tray bottom plate [9] moves down.
- Damper [10] lets the tray bottom plate drop slowly.

Downloaded from www.Manualslib.com manuals search engine

Fence Drive

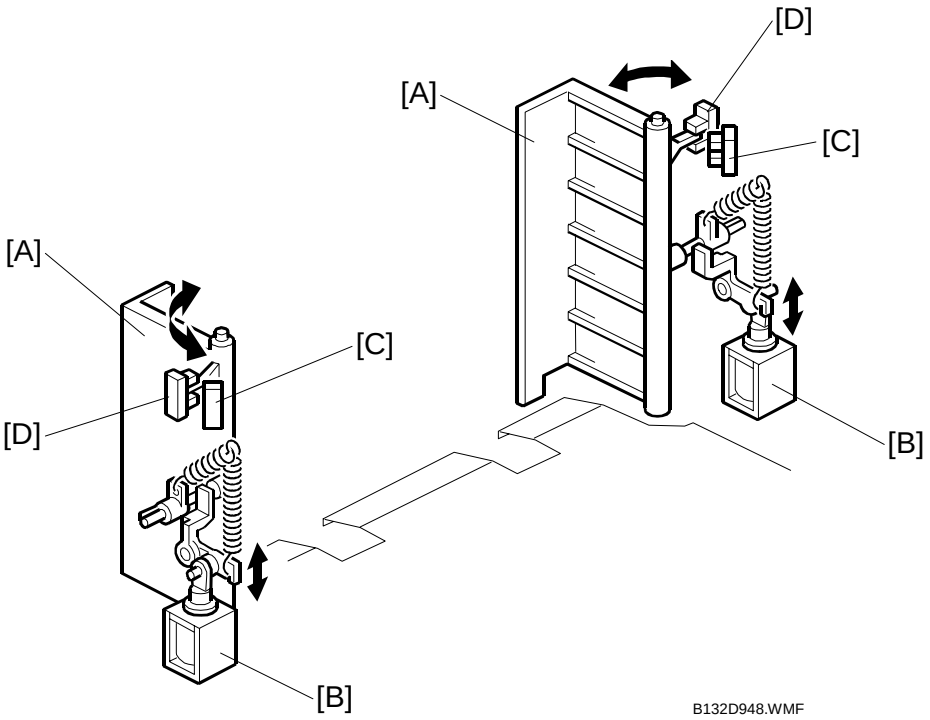

The side fences [A] of the right tray open only when paper in the left tray goes to the right tray.

The side fence solenoids [B] turn on and open the side fences. The side fences move out until the open sensors [C] activate.

After the stack has been moved into the right tray: The side fence solenoids turn off and the side fences close. The side fences move in until the close sensors [D] activate. Next, the LCD prompts the operator to set paper in the left side of the tandem tray.

Downloaded from www.Manualslib.com manuals search engine

Rear Fence Drive

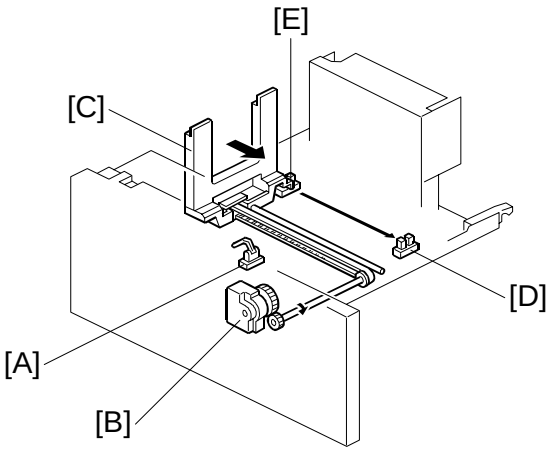

B132D950.WMF

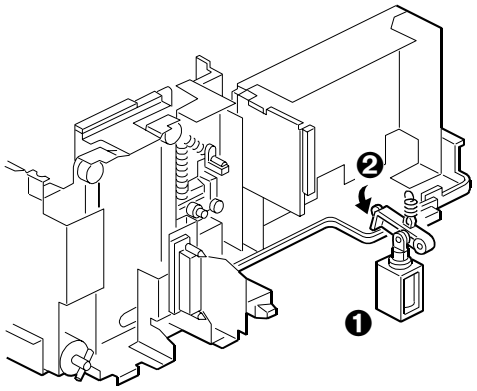

B132D949.WMF

Left tray paper sensor [A] detects paper, right tray paper sensor does not detect paper:

- Rear fence motor [B] (a DC motor in the left tray) turns on and rotates counter-clockwise
- Rear fence motor drives rear fence against the paper stack, paper stack moves toward right tray
- As soon as rear fence starts to move, left ray lock solenoid ❶ turns on and locks lever ❷ to hold the left tray in place
- Rear fence [C] pushes the paper stack completely into the right tray.
- Rear fence return sensor [D] detects the actuator on the rear fence
- Motor [B] stops, reverses, and turns clockwise
- Rear fence moves back to the left tray until rear fence HP sensor [E] detects the actuator.
- HP sensor turns the rear fence motor off.
- As soon as rear fence stops moving, left tray lock solenoid ❶ turns off and releases lever ❷ to unlock the left tray.

Downloaded from www.Manualslib.com manuals search engine

Tray Side-to-side Positioning

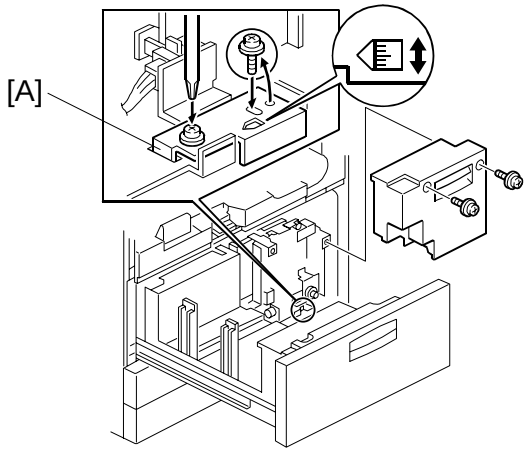

B132D952.WMF

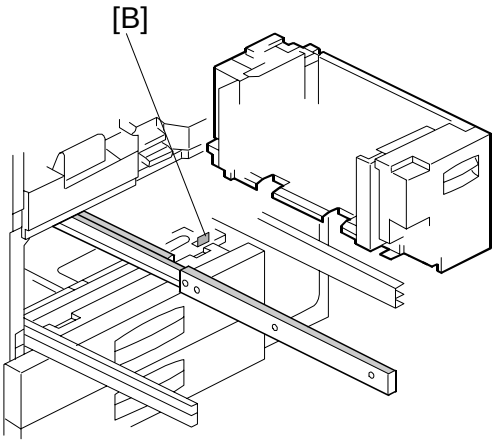

B132D951.WMF

When the feed tray is set in the feed unit, the side-to-side positioning plate [A] presses the feed tray against the stopper [B].

By moving the positioning plate, the tray position can be changed to adjust the side-to-side registration.

Downloaded from www.Manualslib.com manuals search engine

6.13.9 TRAY POSITIONING MECHANISM – TRAYS 1 TO 3

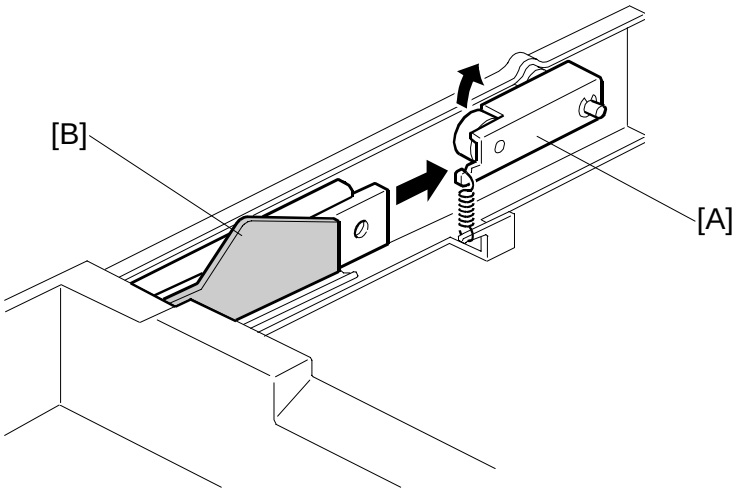

When the tray is placed in the feed unit, the lock lever [A] drops behind the lock plate [B] on the support bracket to lock the tray in the proper position.

Downloaded from www.Manualslib.com manuals search engine

6.13.10 BYPASS TRAY

Bypass Feed and Separation

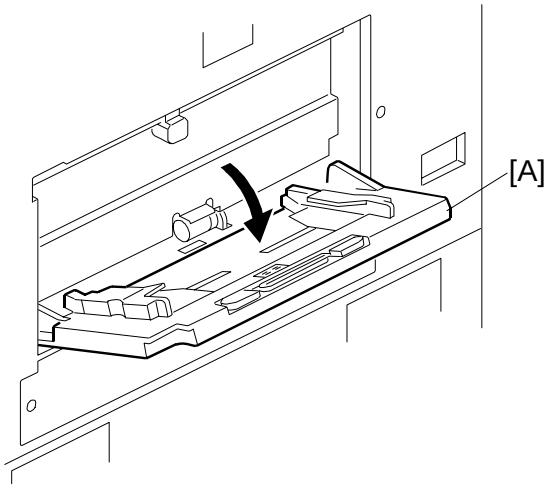

B132D954.WMF

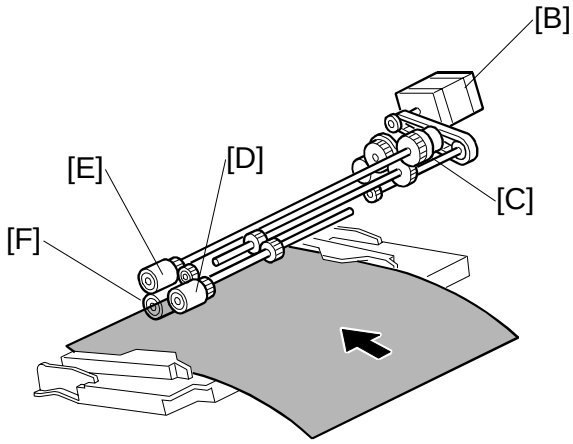

B132D603.WMF

The bypass tray [A] opens from the right side of the machine.

Bypass Tray Operation Sequence:

Bypass feed motor [B]→ Bypass feed clutch [C]→ Pick-up roller [D] → Pick-up solenoid (see the next page)→ Feed roller [E] and separation roller [F]

The bypass tray uses the standard FRR feed system. (CT Handling Paper> Paper Feed Methods> **Forward and Reverse Roller (FRR)** or **Bypass Feed Tray**)

NOTE: The direction of feed in the bypass tray is opposite from that of the other paper trays, so their parts (with the exception of the separation roller) are not interchangeable.

Downloaded from www.Manualslib.com manuals search engine

Bypass Tray Paper End Detection

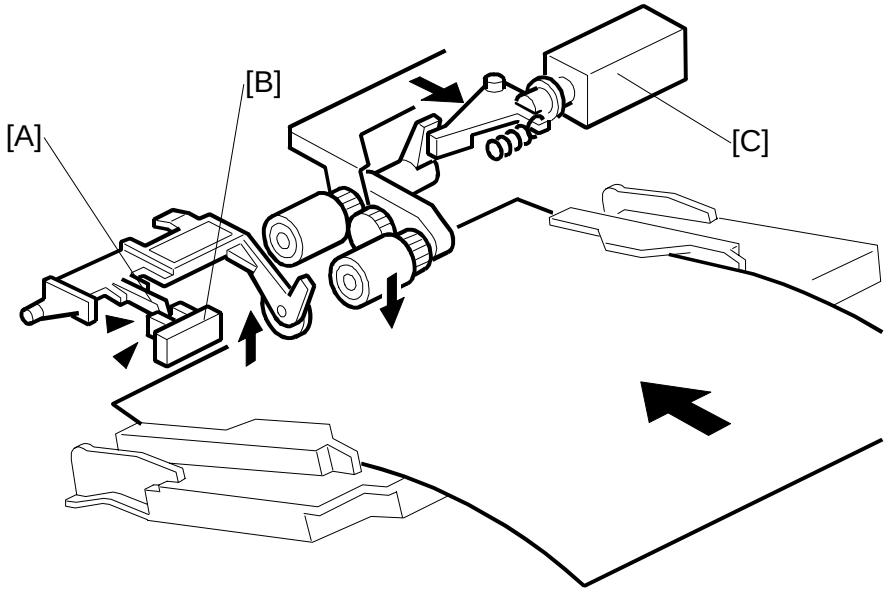

B132D604.WMF

When the paper runs out, the paper end feeler [A] drops through the cutout in the bypass paper end sensor [B].

[C]: Pickup solenoid

Downloaded from www.Manualslib.com manuals search engine

Bypass Paper Size Detection

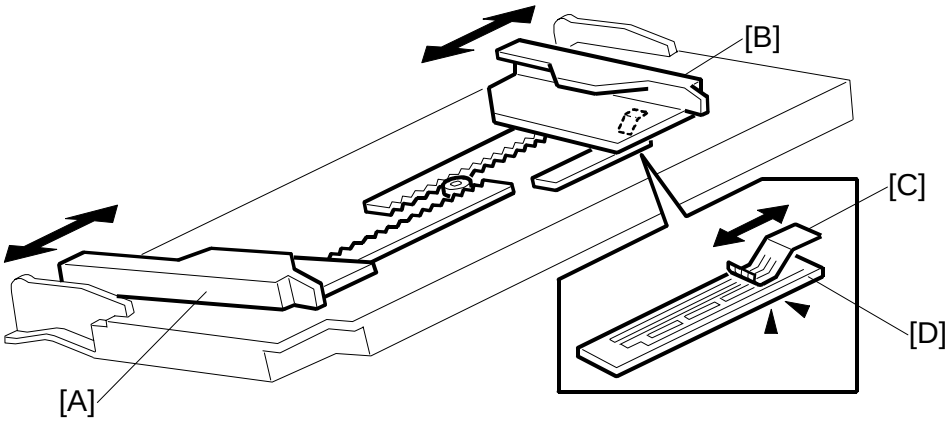

B132D602.WMF

Paper Width

When the front fence [A] and rear fence [B] are moved to the sides of the paper in the bypass tray:

- The metal actuator [C] moves to a position on the sensor strip [D].
- The machine reads the position of the actuator on the strip to determine the paper size.

Paper Length

Paper length is determined with pulse counts read from the registration sensor.

NOTE: Use **SP1007** to check the size of the paper detected in the bypass tray if paper is skewing during feeding.

Downloaded from www.Manualslib.com manuals search engine

The operator can specify non-standard paper sizes for feeding from the bypass tray. The size must be within the range shown in the illustration.

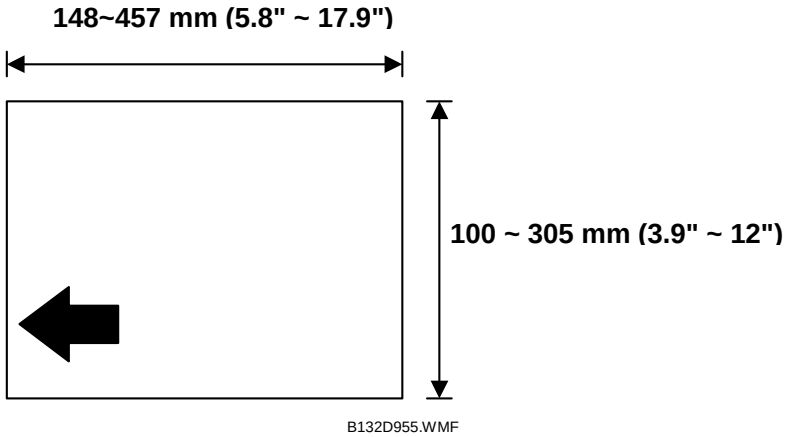

B132D955.WMF

NOTE:

- Use **SP1905** to adjust the bypass feed clutch operation if thick paper often jams at the registration roller. For more, see “5. Service Tables”.
- Use **SP5150** to enable paper length up to 600 mm (23.6").

Downloaded from www.Manualslib.com manuals search engine

6.13.11 PAPER REGISTRATION

Overview

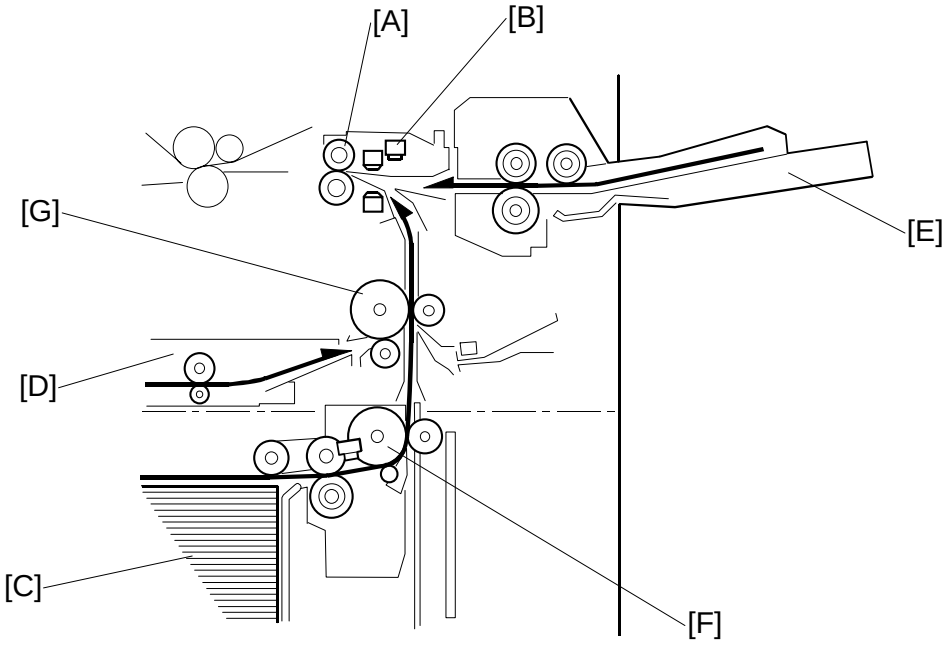

B132D941.WMF

The registration rollers [A] and registration sensor [B] handle paper fed from six sources:

[C]: Tandem tray and two universal trays
[D]: Duplex unit
[E]: Bypass tray

The bypass tray feeds paper directly to the registration rollers.

The grip rollers [F] feed paper from the trays into the vertical transport path to the registration rollers.

The upper relay roller [G] feeds all paper exiting the vertical transport path. It also feeds paper from the duplex unit and LCT.

Downloaded from www.Manualslib.com manuals search engine

Paper Registration Drive

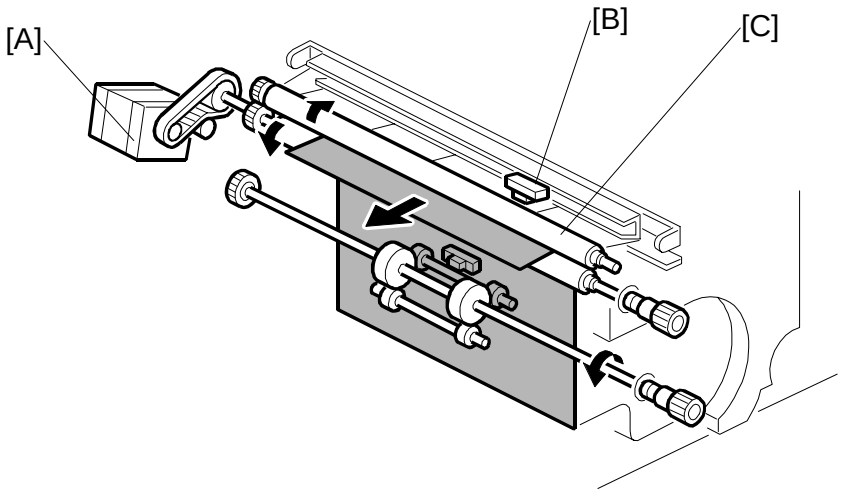

B132D607.WMF

The registration motor [A] stops when the registration sensor [B] detects the paper at the registration rollers [C].

Because the paper is still feeding, the paper buckles against the registration rollers and corrects skew.

NOTE: Use **SP1003** to adjust the registration motor timing for each paper feed station or the duplex tray. For details see “5. Service Tables”.

Two mylars ① and ② at the registration rollers collect dust from the paper and other rollers to reduce the amount of paper dust in the paper feed path after the registration rollers.

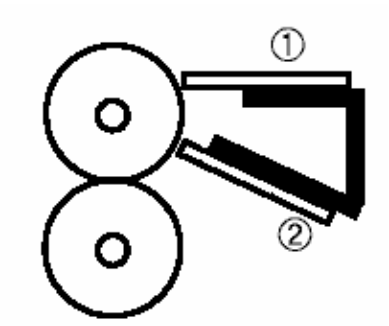

B132D940.BMP

Downloaded from www.Manualslib.com manuals search engine

Jam Removal at Paper Registration

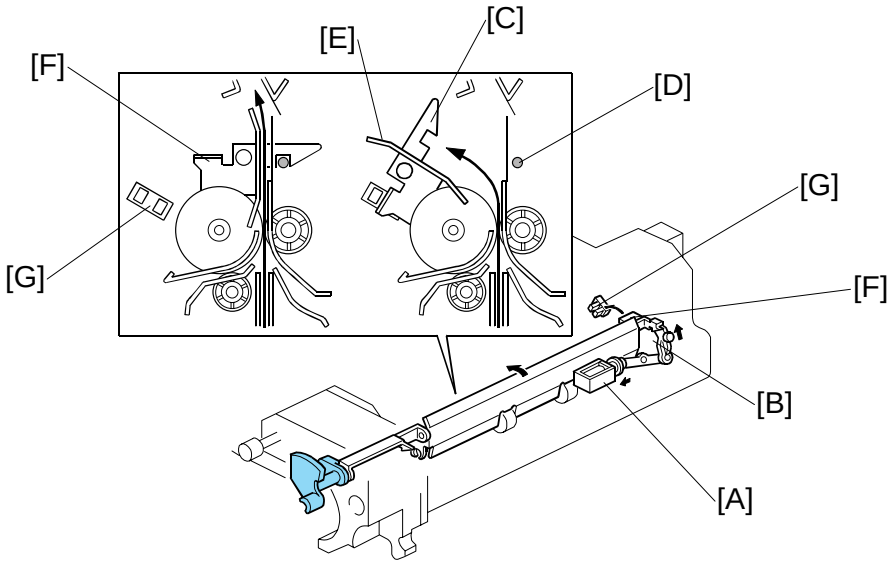

B132D617.WMF

If a paper misfeed occurs between the vertical transport rollers and the registration rollers, the next sheet is already on its way up from the paper tray. The paper in the feed path must be stopped to avoid paper jams.

When a jam occurs, a guide plate falls open to divert paper into the duplex tray. When the registration sensor signals that a jam has occurred at the registration rollers:

- Guide plate solenoid [A] turns on and raises lever [B].
- Lock lever [C] on the guide plate releases pin [D] on the rear side frame
- The guide plate [E] falls open. The open plate diverts paper from the feed path below into the duplex tray.
- As soon as the guide plate opens, actuator [F] on the guide plate activates the guide plate position sensor [G]

The operator must remove the paper jammed in the feed path, remove the diverted paper in the duplex tray, and close the guide plate.

To prevent the guide plate from being left open, copying is disabled and a caution is displayed on the LCD panel as long as the guide plate remains open with the guide plate sensor activated.

Downloaded from www.Manualslib.com manuals search engine

6.13.12 PAPER TYPE AND DOUBLE-FEED DETECTION

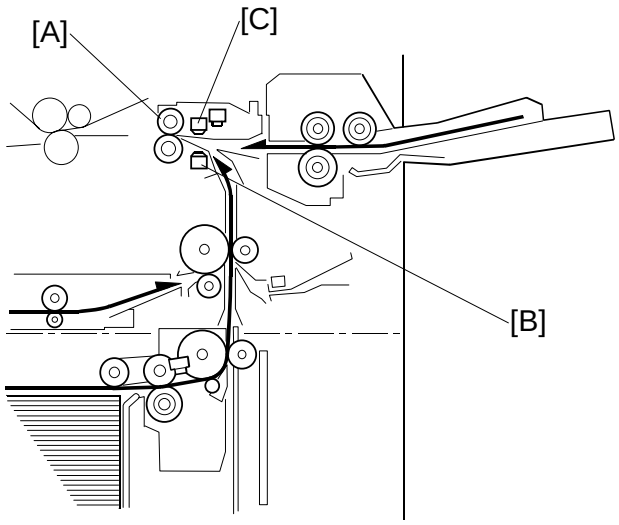

B132D941.WMF

[A]: Registration Rollers
[B]: Double-Feed Detection LED (LED)
[C]: Double-Feed Detection Sensor (Receptor)

After skew correction at the registration rollers, a sensor pair checks the translucence of each sheet. This function makes sure that each sheet of paper fed is of the same type and also detects double-feeds. If a sheet of a different type or a double-feed is detected, the machine stops the job and a copy jam error message is shown.

After buckle adjustment, double-feed detection LED [B] (an LED) emits light that passes through the sheet above. The light is received by double-feed detection sensor [C].

Downloaded from www.Manualslib.com manuals search engine

The amount of light received by the double-feed detection sensor is referred to a lookup table that stores the values of the translucence of paper types.

- **Paper type check**. If the amount of light measured is within the range of translucence for the paper selected for the copy job, no action is taken. If the value is out of range, the machine stops the job.
- **Double-feed check**. The translucence of the paper at the registration roller is compared to the reading of the previous sheet. If the translucence of the sheet at the registration rollers is less than that of the previous sheet (greater opacity), the CPU determines that a double-feed has occurred and stops the job.
- In either case, after the job halts, the sheets must be cleared, just as if a jam occurred at the registration rollers.
- **SP1110 001-012** enables/disables double-feed and paper type detection for the paper feed sources (trays 1 to 3, the LCT, and bypass tray). For more, see Section “5. Service Tables”.
- You can also switch these features on and with User Tool settings:

  [User Tools/Counter]> System Settings> Tray Paper Setting> Next (3 times)> Double Feed Detect/Paper Type Detect> Off (or On)> for Bypass Tray; Tray 1, 2, 3; or LCT.

Downloaded from www.Manualslib.com manuals search engine

Paper Types

The machine can distinguish between the following paper types using the output from the double-feed detection sensor / double-feed detection LED.

Paper Type (UP Mode)	Paper Weight Range	Translucence
OHP	---	HIGH
Tracing Paper	---	↓
Thin Paper	14 to 19 lb Bond 52 to 71 g/m^2	↓
Normal	19 to 33 lb Bond 72 to 126 g/m^2	↓
Thick Paper 1	33 to 41 lb Bond 127 to 156 g/m^2	↓
Thick Paper 2	41 to 68 lb Bond 157 to 256 g/m^2	LOW

The paper type selection is reset:

- When the machine is switched off and on, the paper type setting for the bypass tray is reset. The paper type settings for other trays are not reset.
- When the tray is set, or LCT cover is set
- When using bypass feed (paper set in the bypass tray)
- After a double-feed error and the paper has been removed
- When the paper type setting is changed.

UP Mode Settings

The operator can select either "Paper Type Detection" or "Double-Feed Detection" in the Operator Tools (UP) mode for each paper feed station (default: ON).

Neither paper type recognition nor double-feed detection operates when feeding paper shorter than 160 mm from the from the bypass tray.

Paper type detection operates only for paper types that are available for this feature ("None", "Recycled", "Tracing Paper", or "OHP") is selected. For example, this function cannot operate for these paper type selections: Reused, Color Paper, Adhesive Labels, Tab Paper.

For slip sheet mode, the tray that contains the slip sheets must be set to ‘OFF’ with the user tools for “Paper Type Detection" or "Double-Feed Detection".

Downloaded from www.Manualslib.com manuals search engine

6.14 FUSING, PAPER EXIT

6.14.1 OVERVIEW

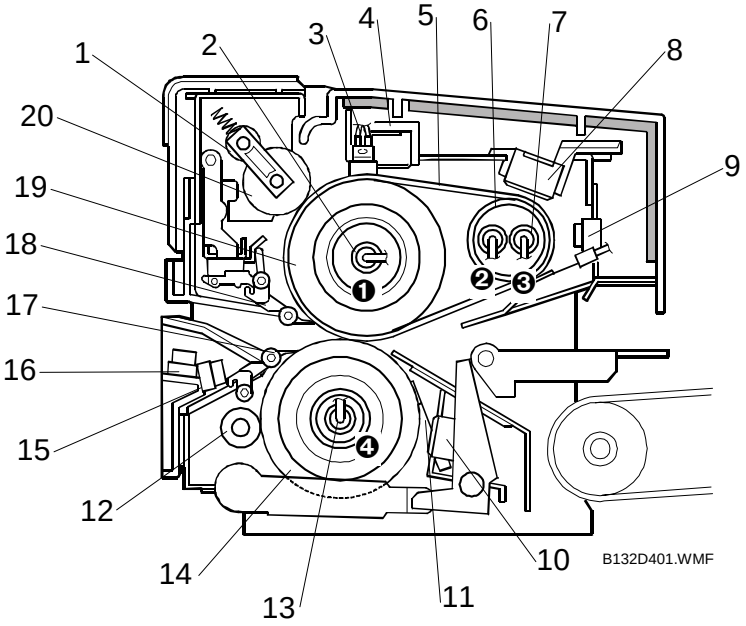

1. Cleaning Roller – Fusing Belt Lubrication Roller
2. Fusing Lamp (x1 –Hot Roller)
3. Thermistor (Hot Roller)
4. Thermostat (Hot Roller)
5. Fusing Belt
6. Heating Roller (ϕ28.5)
7. Fusing Lamps (x2 – Heating Roller)
8. Thermostat (Heating Roller)
9. Heating Roller Temperature Sensor
10. Thermostat (Pressure Roller)
11. Thermistor (Pressure Roller)
12. Cleaning Felt Roller
13. Fusing Lamp (x1 Pressure Roller)
14. Pressure Roller (ϕ50)
15. Accordion Jam Sensor
16. Fusing Exit Sensor
17. Pressure Roller Strippers
18. Fusing Belt Strippers
19. Hot Roller (ϕ52)
20. Fusing Belt Lubrication Roller

Fusing Lamps

Hot Roller	❶ 350W
Heating Roller	❷ ❸ 590W
Pressure Roller	❹ 350W

Downloaded from www.Manualslib.com manuals search engine

The fusing belt system applies heat to the belt at three points: the hot roller, the heating roller, and the pressure roller. This allows the use of smaller rollers and conserves space. As less pressure is necessary during fusing, less torque is required.

- The fusing belt, composed of silicone and Teflon layers, applies heat directly to fuse the toner to the paper.
- The heating roller is an aluminum roller with two fusing lamps (590W + 590W). It applies heat to the fusing belt after it passes the hot roller, and maintains the heat of the fusing belt while the machine is in standby mode.
- The pressure roller has a metal core to provide rigidity, and is covered with Teflon to prevent toner from adhering to its surface. It applies heat with one fusing lamp (350W) to maintain the temperature of the fusing belt while the machine is in standby mode.
- The accordion jam sensor detects accordion jams where the paper exits at the nip between the hot roller and pressure roller.
- The fusing exit sensor detects jams at the fusing exit by confirming that paper arrives the fusing exit at the correct time.
- The hot roller is a solid rubber roller with one fusing lamp (350W) that heats and drives the fusing belt. Maintains the temperature of the fusing belt while the machine is in the standby mode.

The fusing/exit motor speed depends on the paper type, as shown in the table below.

Paper Type Selection (User Tools)	Paper Weight Range	Line Speed
Thin	14 to 19 lb Bond 52 to 71 g/m^2	282 mm/s
Normal	19 to 33 lb Bond 72 to 126 g/m^2	282 mm/s
Thick 1	33 to 41 lb Bond 127 to 156 g/m^2	141 mm/s
Thick 2	41 to 68 lb Bond 157 to 256 g/m^2	141 mm/s
OHP	---	100 mm/s

Downloaded from www.Manualslib.com manuals search engine

6.15 THERMISTORS, THERMOSTATS

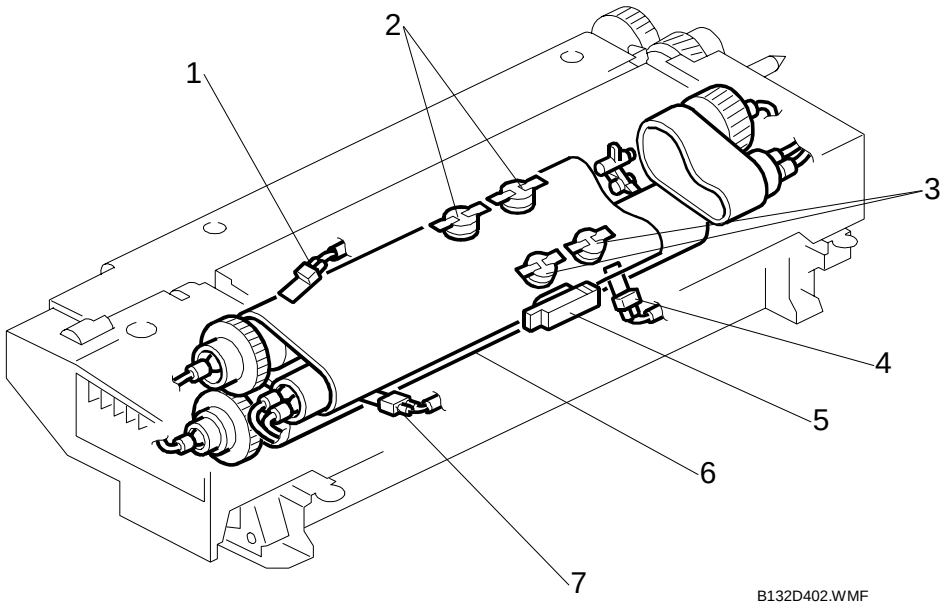

1. Hot Roller Thermistor
2. Hot Roller Thermostats
3. Heating Roller Thermostats
4. Pressure Roller Thermistor
5. Heating Roller Temperature Sensor
6. Pressure Roller Thermostats
7. Heating Roller Thermistor

Each roller in the fusing unit has one thermistor and two thermostats.

Downloaded from www.Manualslib.com manuals search engine

6.15.1 FUSING UNIT DRIVE

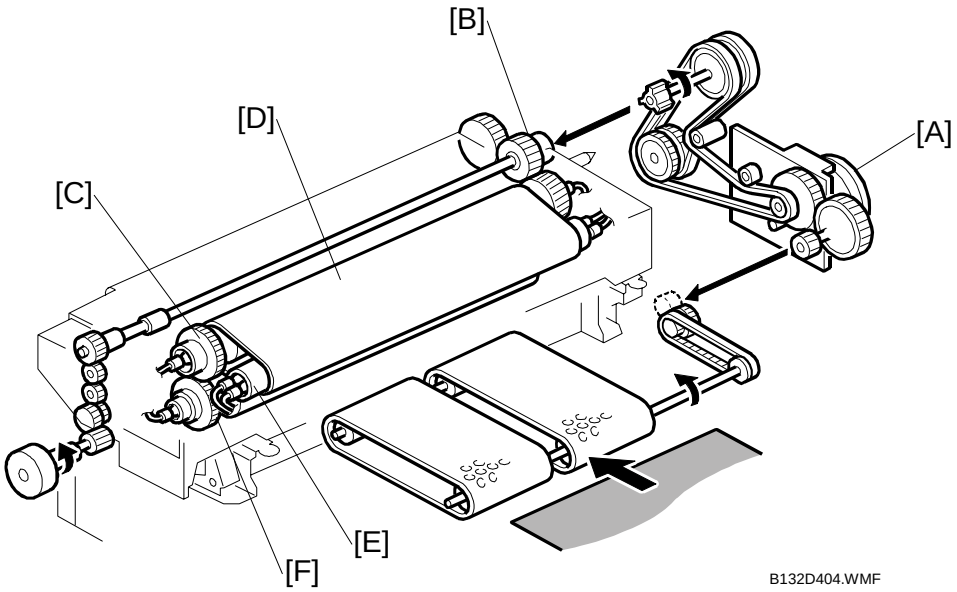

[A]: Fusing/exit motor
[B]: Idle roller
[C]: Hot roller
[D]: Fusing belt
[E]: Heating roller
[F]: Pressure roller

The fusing/exit motor [A] drives the fusing unit.

Fusing exit motor [A]> Idle Roller [B]> Hot Roller [C]> Fusing Belt [D], Heating Roller [E], Pressure Roller [F].

Downloaded from www.Manualslib.com manuals search engine

6.15.2 LUBRICATION AND CLEANING

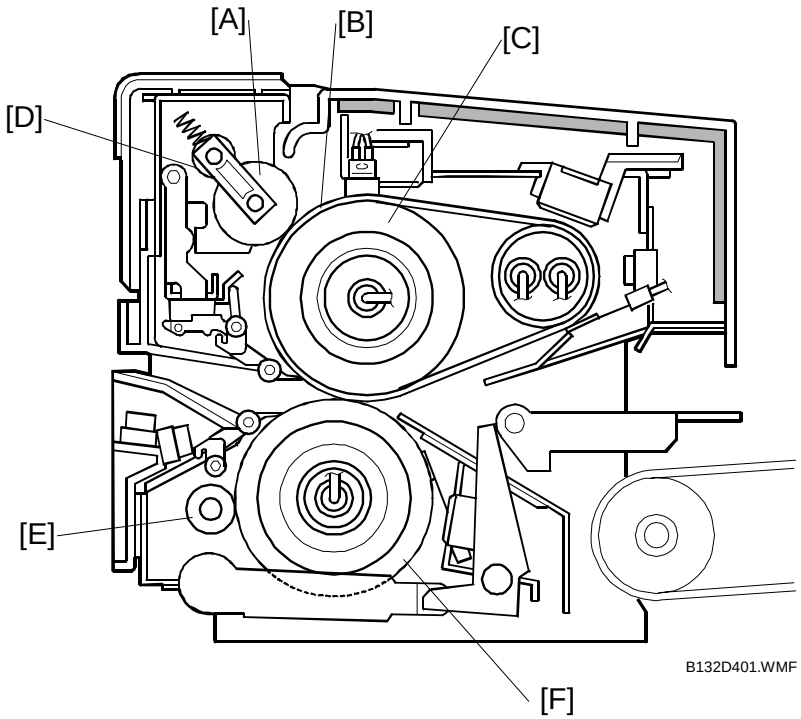

[A]: Fusing belt lubrication roller
[B]: Fusing belt
[C]: Hot roller
[D]: Cleaning roller – fusing belt lubrication roller
[E]: Cleaning felt roller
[F]: Pressure roller

The fusing unit uses two lubrication rollers saturated with silicone oil to prevent toner and paper dust from clinging to the fusing belt.

The fusing belt lubrication roller [A], contacts the fusing belt [B] above the hot roller [C]. This lubrication roller applies a very thin coat of silicone oil to the fusing belt where the belt contacts the roller.

A cleaning roller [D] cleans the surface of the fusing belt lubrication roller.

The cleaning felt roller [E] cleans the surface of the pressure roller [F].

Downloaded from www.Manualslib.com manuals search engine

Stripper Retraction

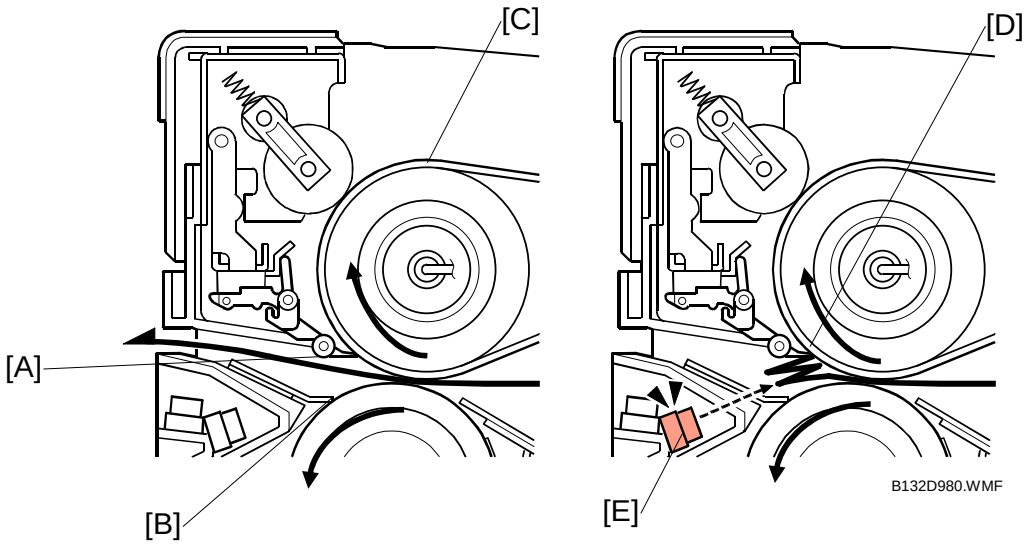

The pawls of the fusing belt strippers [A] and pressure roller strippers [B] touch the surfaces of the fusing belt and pressure roller during normal operation.

These strippers are held in place with small springs. If paper does not separate from the fusing belt at [C], for example, the point of the stripper separates the paper from the fusing belt.

The strippers retract immediately under the slightest pressure [D] if an accordion jam occurs. This prevents the points of the strippers from damaging the surfaces of the fusing belt or the pressure roller if a jam occurs where the paper emerges from the nip of the hot roller and pressure roller.

The accordion jam sensor [E] checks for jams around the fusing unit strippers when:

- The machine is turned on
- The front door is opened and closed

Downloaded from www.Manualslib.com manuals search engine

6.15.3 FUSING TEMPERATURE CONTROL

Basic Temperature Control

The fusing unit has four fusing lamps: one in the hot roller (350W), two in the heating roller (590W x2), and one in the pressure roller (350W).

- The heating roller is the main source of heat to the fusing belt for fusing.
- The hot roller provides additional heat for fusing.
- The pressure roller maintains the temperature of the fusing belt while the machine is in standby mode.

The feedback from these thermistors controls the fusing temperature.

Heating roller:	A temperature sensor located at the center and a thermistor at the front end of the heating roller.
Hot roller:	A thermistor located at the front end of the hot roller.
Pressure roller:	A thermistor located at the center of the pressure roller.

Downloaded from www.Manualslib.com manuals search engine

Temperature Control Graph

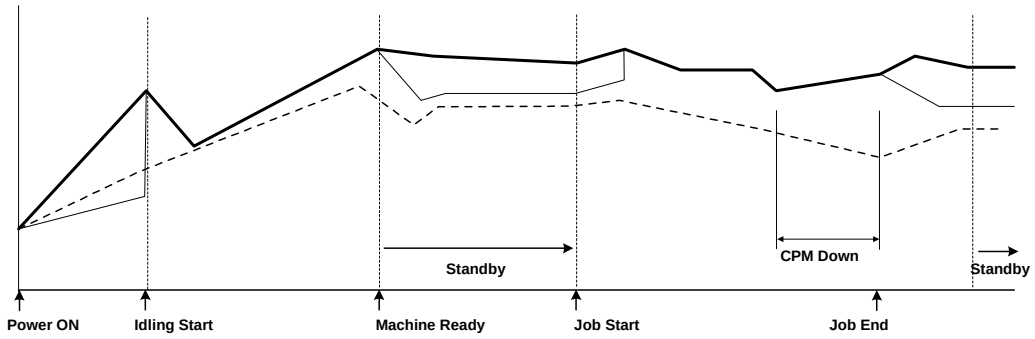

B132D131.WMF

Heating Roller Temperature
Hot Roller Temperature
Pressure Roller Temperature

This table shows how temperature control is done in the different operation modes.

Mode		Heating Roller		Hot Roller		Pressure Roller	
		°C	F	°C	F	°C	F
Plain Paper	B&W	175 (175)	347 (347)			160 (120)	320 (248)
	FC	175 (175)	347 (347)			160 (120)	320 (248)
Thick Paper 1	B&W	175 (175)	347 (347)			160 (120)	320 (248)
	FC	175 (175)	347 (347)			160 (120)	320 (248)
Thick Paper 2	B&W	180	356			160 (120)	320 (248)
	FC	180	356			160 (120)	320 (248)
OHP	B&W	170	338			100	212
	FC	170	338			100	212
Thin Paper	B&W	160 (160)	320 (320)			150 (120)	302 (248)
	FC	160 (160)	320 (320)			150 (120)	302 (248)
Idling Start		160	320				
Ready (machine ready; lamps on, rollers turning)		180	356			165	329
Standby (between jobs)		177	351	145	269.6	152	306
Energy Save	Low Power Mode	-185	-333	-50	-90	-60	-108
	Off Mode	Off		Off		Off	

Detailed Descriptions

Notes:

The parentheses indicate the temperatures for duplexing. Example: 150 (120) 120°C during duplexing.

If a part of the table is blank, it means that the lamp is not used. For example, the hot roller lamp is only used during standby (between jobs).

Downloaded from www.Manualslib.com manuals search engine

Correction for Machine Internal Temperature

If the temperature inside the machine is less than 20 ºC, all target fusing temperatures are increased by 5 ºC.

If the temperature inside the machine is more than 20 ºC, the standby temperature is decreased by 5 ºC.

The temperature inside the machine is measured with the temperature sensor that is near the waste toner bottle.

Copy Speed Reduction (CPM Down Mode)

During copying, the target temperature is 175 ºC (plain paper).

If the room temperature is low (less than 10 ºC), the fusing unit temperature can become too low.

To compensate for this, copy speed is reduced, as explained below.

After 20 copies, if the fusing unit temperature is 165 ºC or less, the copier goes into **1st CPM Down Mode**. At this time, the copy speed decreases to 55 cpm (black-and-white) and 30 cpm (color).

After 10 more copies, if the fusing unit temperature is less than 165 ºC, the copier goes into **2nd CPM Down Mode**. At this time, the copy speed decreases to 45 cpm (black-and-white) and 25 cpm (color).

If the fusing temperature increases to 175 ºC, the copier speed goes back up one level (to 1st CPM Down Mode, or to full copying speed).

Downloaded from www.Manualslib.com manuals search engine

6.15.4 FUSING UNIT VENTILATION

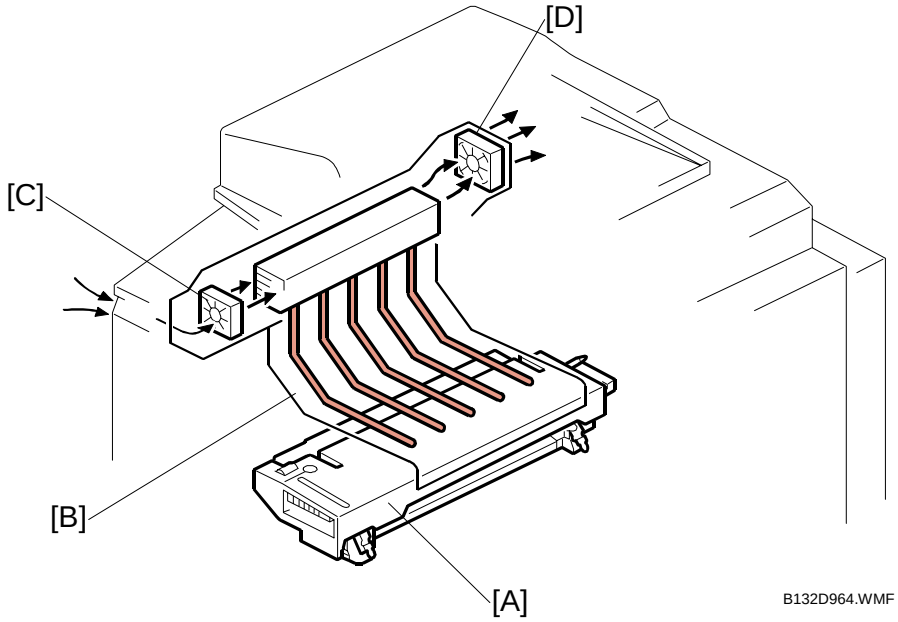

[A]: Fusing unit
[B]: Heat sink
[C]: Fusing cooling fan
[D]: Fusing exhaust fan

Heat rising from the fusing unit [A] collects around a heat sink [B]. The heat sink contains pipes with water that help to cool the hot air.

The fusing cooling fan [C] pulls cool air into the machine and blows it over the heat sink. The fusing exhaust fan [D] pulls the heated air away from the heat sink and expels it through a vent.

Downloaded from www.Manualslib.com manuals search engine

6.16 DUPLEX UNIT

6.16.1 OVERVIEW

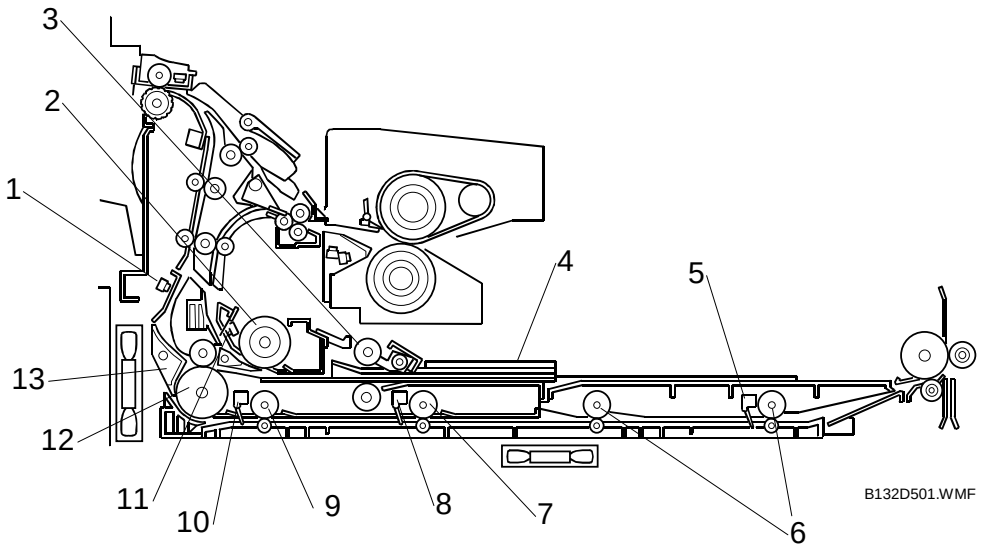

1. Relay Sensor
2. Inverter Entrance Roller
3. Reverse Trigger Roller
4. Jogger Fences
5. Duplex Transport Sensor 3
6. Duplex Transport Rollers 3, 4
7. Duplex Transport Roller 2
8. Duplex Transport Sensor 2
9. Duplex Transport Roller 1
10. Duplex Transport Sensor 1
11. Duplex Inverter Sensor
12. Inverter Exit Roller
13. Duplex Junction Gate

For one-sided printing, pages are fed out face-down (default). For face-down output, the exit junction gate sends the page to the inverter, and the inverter inverts the page.

If the operator selected duplex mode, the inverter inverts the page, then the duplex junction gate directs the page into the duplex unit. The duplex unit feeds the page back to the machine to print on the second side.

Downloaded from www.Manualslib.com manuals search engine

6.16.2 DUPLEX DRIVE

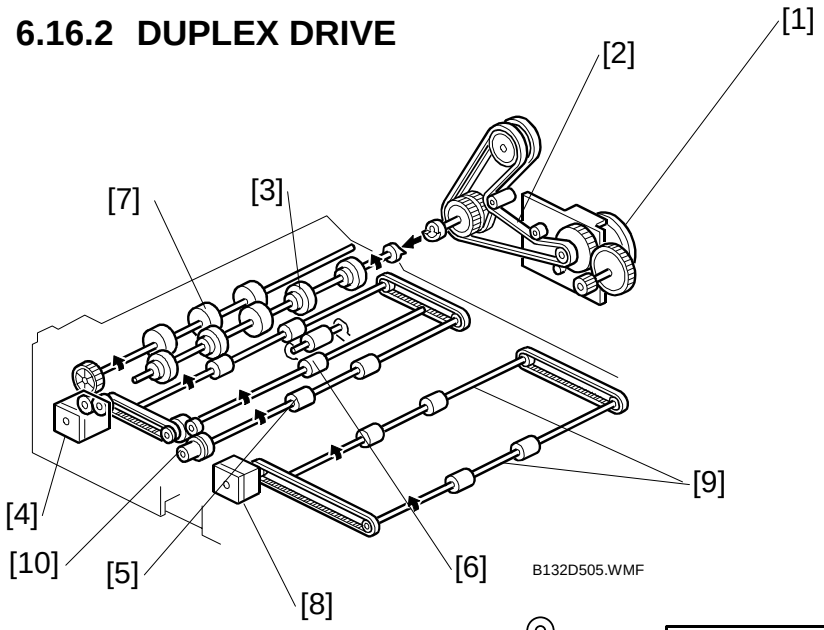

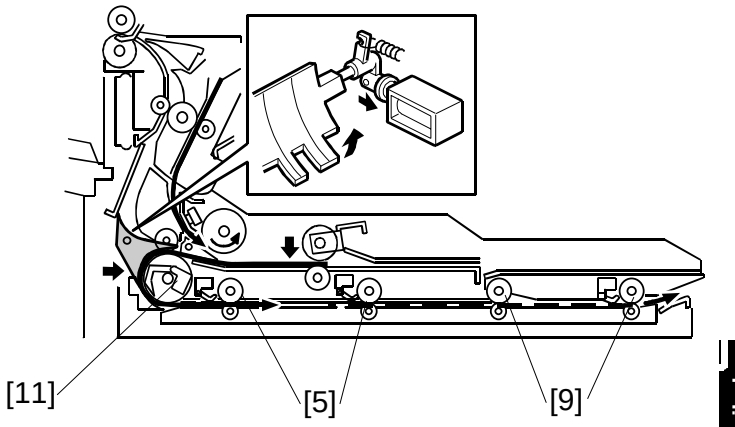

Fusing/exit motor [1] → Timing belt [2] → Inverter entrance roller [3]

Duplex inverter motor [4] → Timing belt → Transport rollers 1, 2 [5] + duplex positioning roller [6]

Duplex inverter motor [4] → Inverter exit roller [7]

Duplex transport motor [8] → Timing belt → transport rollers 3, 4 [9]

Duplex transport clutch [10]:

- Stops transport rollers 1, 2 [5] during interleaving →Allows the sheet in front to be fed out of the duplex unit by motor [8] and rollers [9].
- Controlled by the duplex inverter sensor [11]

Downloaded from www.Manualslib.com manuals search engine

6.16.3 INVERTER OPERATION

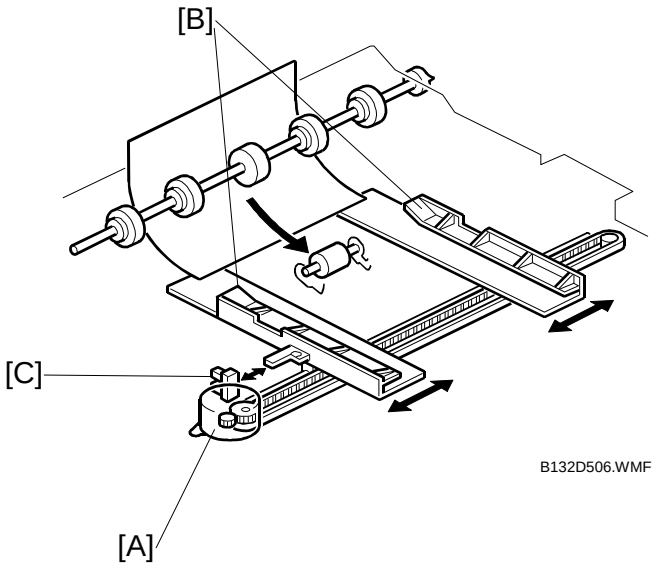

B132D506.WMF

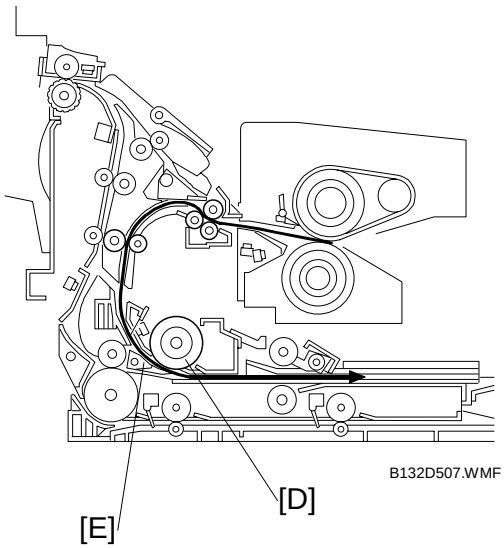

B132D507.WMF

Inverter Feed-in and Jogging

Just after the main switch is turned on:

- Duplex jogger motor [A] (a stepper motor) moves the jogger fences [B] to home position (determined by the duplex jogger HP sensor [C]).

When the Start key is pressed:

- Motor [A] positions fences [B] 12 mm away from the selected paper size to wait for the paper.
- Inverter entrance roller [D] feeds paper to the jogger section → The paper pushes down the junction gate [E].

After the paper passes through the gate:

- Motor [A] moves the jogger fences [B] in to square the paper. This happens every page.
- Next, the jogger fences move back to the previous position (12 mm away from the paper)

Downloaded from www.Manualslib.com manuals search engine

Inverter Feed-out

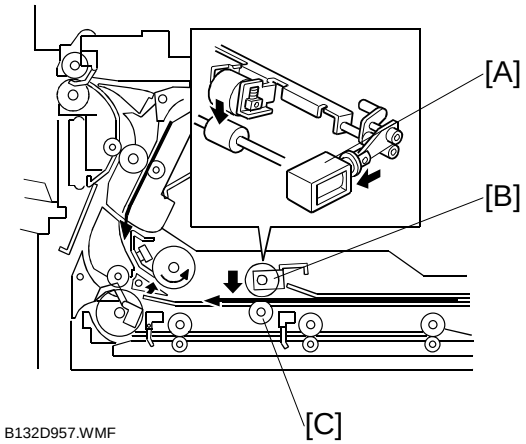

B132D957.WMF

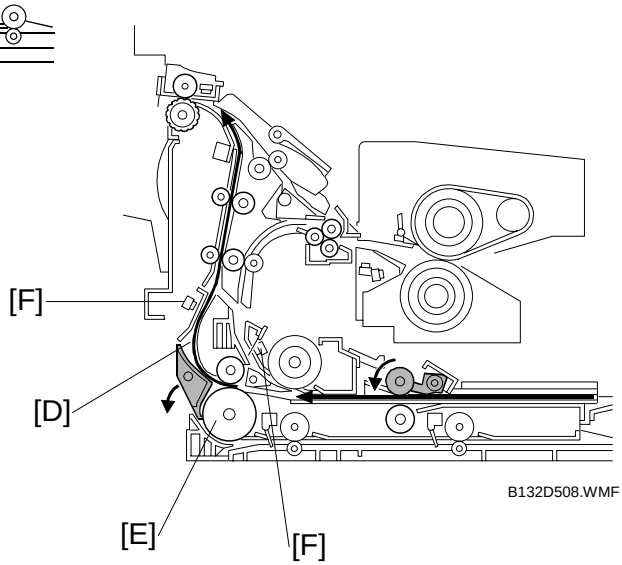

B132D508.WMF

[A]: Reverse trigger roller solenoid
[B]: Reverse trigger roller
[C]: Reverse roller
[D]: Paper
[E]: Inverter exit roller
[F]: Relay sensor

After jogging, each page is fed back as follows:

- Solenoid [A] pushes down roller [B].
- Roller [B] contacts roller [C], catching the paper between the two rollers.
- Roller [C] always turns counter-clockwise, and feeds the paper [D] backwards to roller [E].

When the leading edge of the paper, now caught by roller [E], passes sensor [F], solenoid [A] switches off and roller [B] returns to its home position.

Downloaded from www.Manualslib.com manuals search engine

6.16.4 DUPLEX TRAY FEED

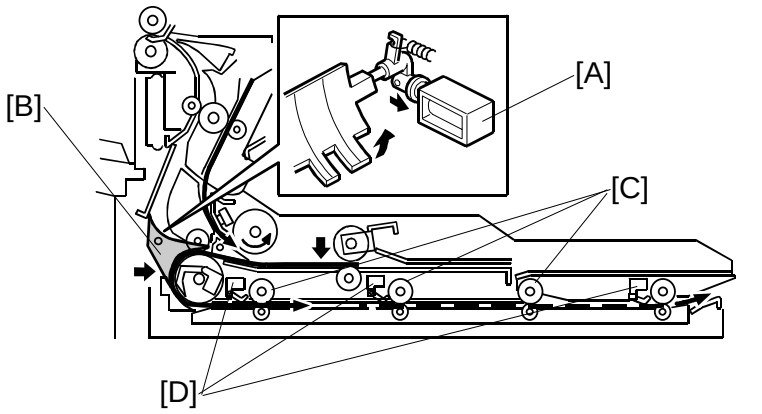

B132D958.WMF

[A]: Junction gate solenoid
[B]: Duplex junction gate
[C]: Transport rollers 1, 2, 3, 4
[D]: Duplex transport sensors 1, 2, 3

After inversion:

- If duplex mode is not selected, the duplex junction gate solenoid [A] does not switch on to open the duplex junction gate [B]. The paper goes to the output tray or finisher face down.
- If duplex mode is selected, after the paper leaves the inverter, the solenoid [A] switches on and opens the junction gate [B]. The paper goes down to the duplex tray.

Downloaded from www.Manualslib.com manuals search engine

6.16.5 DUPLEX INTERLEAVE FEED

The number of sheets that can be processed at a time depends on the size of the paper. The table below shows the order of page processing for a 14-page job. Odd numbers are the front sides of the pages, even numbers are the back sides.

	Order of Page Processing ➜													
Scanning Order	1	2	3	4	5	6	7	8	9	10	11	12	13	14
A4/LT LEF or smaller *1	1	3	5	2	7	4	9	6	11	8	13	10	12	14
Longer than A4/LT(LEF) *2	1	3	2	5	4	7	6	9	8	11	10	13	12	14

*1: 3 pages can be interleave processed at once.
*2: Only 2 pages can be interleave processed at once.

The following diagrams show where the 7 sheets are located at every step during a 14-page duplex print job with A4/LT LEF paper (three pages can be in the feed path at once).

1. First 3 sheets ①②③ fed.
   1) 1st sheet, front page printed (pg. 1)
   2) 2nd sheet, front page printed (pg. 3)
   3) 3rd sheet, front page printed (pg. 5)

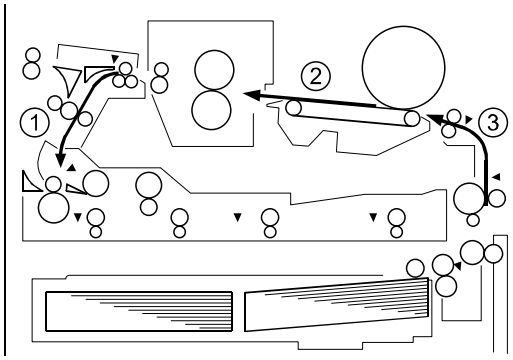

B132D959.WMF

2. 1st, 2nd, 3rd sheet fed to duplex tray and inverter table.
3. 4th sheet feeds.

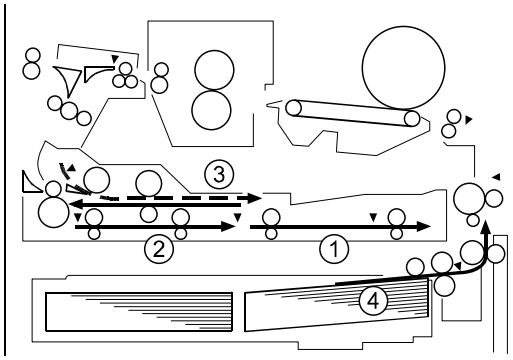

B132D960.WMF

Downloaded from www.Manualslib.com manuals search engine

4. 1st sheet, back page printed (pg. 2)

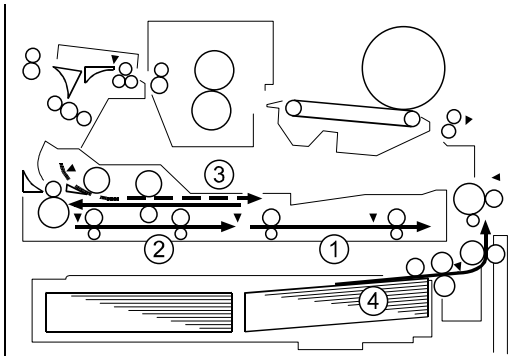

B132D961.WMF

5. 4th sheet feeds, front page printed (pg.7)
6. 1st sheet exits (pg. 1 and 2)
7. 4th sheet feeds to duplex tray.
8. 2nd sheet, back page printed (pg. 4)
9. 5th sheet feeds.

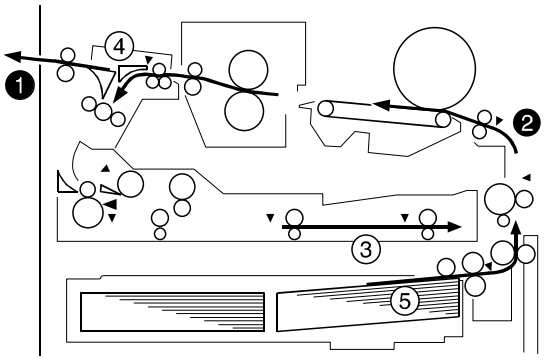

B132D963.WMF

10. 2nd sheet exits.
11. 5th sheet, back page printed (pg. 9), feeds to duplex tray.
12. 3rd sheet, back page printed (pg. 6)
13. 6th sheet, front page printed (pg. 11)
14. 4th sheet, back page, (pg. 8), 7th sheet front page (pg. 13) copied in order, the process above repeats.

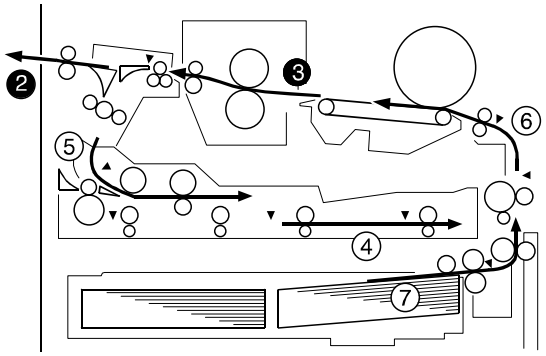

B132D978.WMF

Downloaded from www.Manualslib.com manuals search engine

6.16.6 DUPLEX UNIT VENTILATION

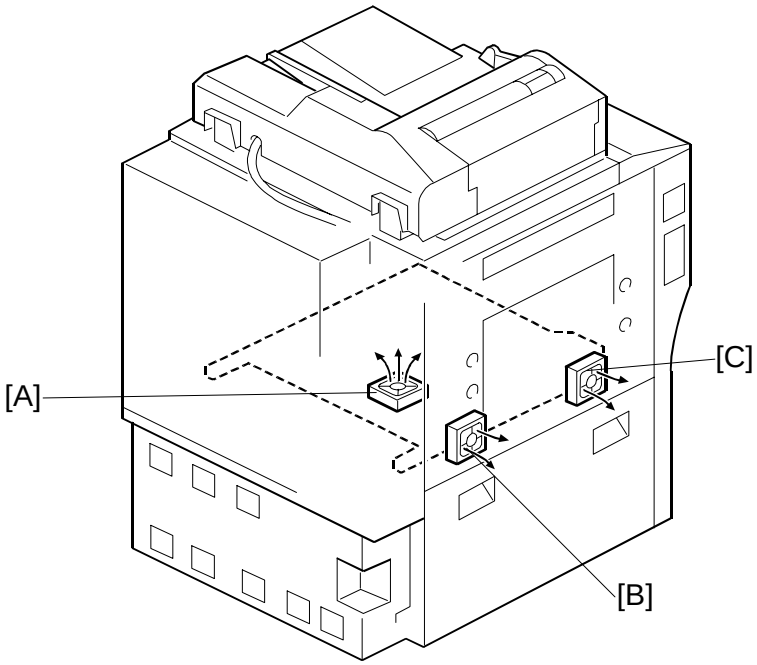

B132D965.WMF

[A]: Duplex Fan
[B]: Rear Duplex Fan
[C]: Front Duplex Fan

The duplex fan [A] draws cool air into the duplex unit.

The rear duplex fan [B] and front duplex fan [C] expel the heated air through vents on the left side of the machine.

Downloaded from www.Manualslib.com manuals search engine

6.17 PAPER EXIT

6.17.1 FACE UP EXIT MECHANISM

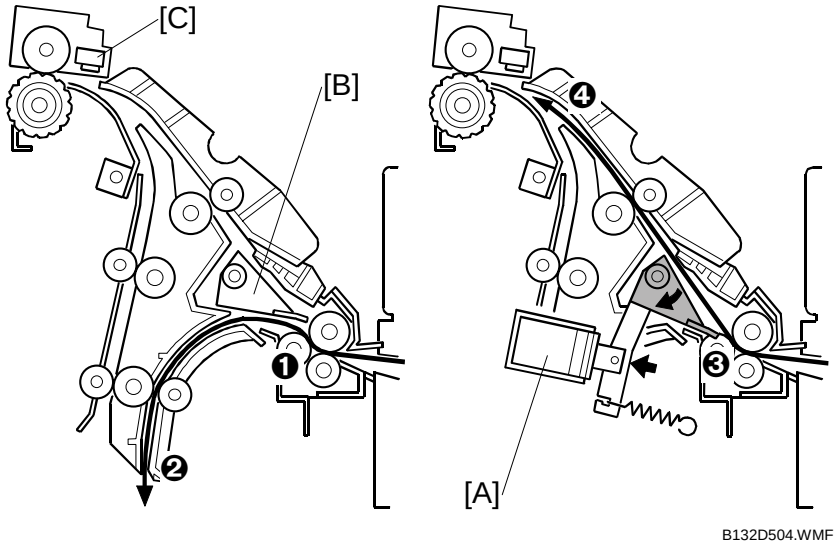

[A]: Inverter Junction Gate Solenoid
[B]: Inverter Junction Gate
[C]: Exit Sensor

When the inverter is used (duplex mode, or face-down output):

- Inverter junction gate solenoid [A] → Off
- Inverter junction gate [B] → Open ❶
- Paper goes down to the inverter ❷

When the inverter is not used (face-up output, or when paper was fed from the bypass tray):

- Inverter junction gate solenoid [A] → On
- Inverter junction gate ❸ → Closed
- Paper goes up to the output tray ❹

The exit sensor [C] detects the leading and trailing edge of each sheet as it feeds out and triggers a jam if the paper is late or stops.

Downloaded from www.Manualslib.com manuals search engine

6.17.2 DE-CURL MECHANISM

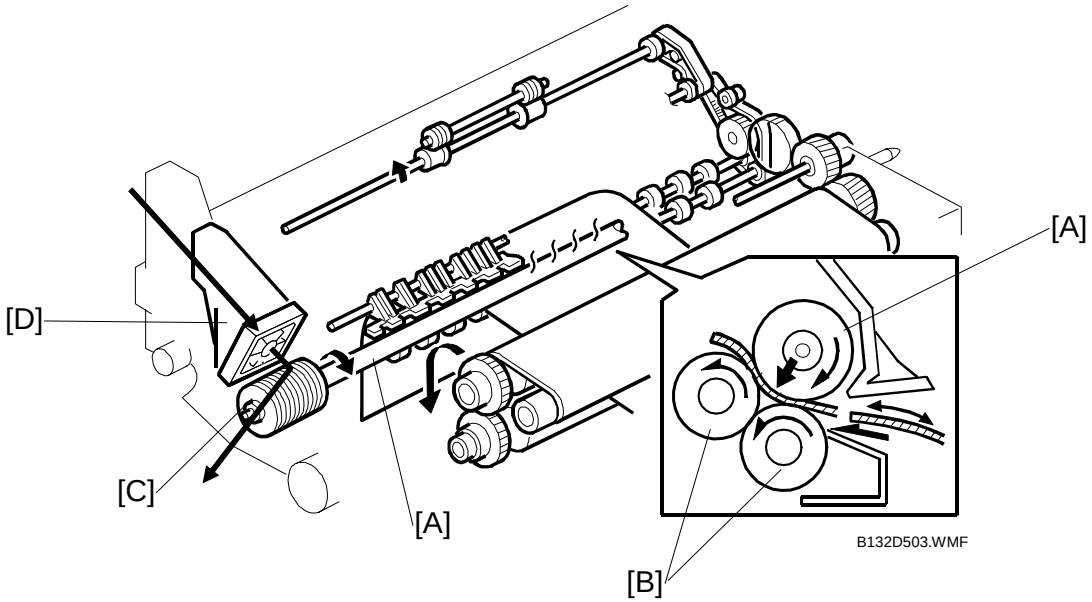

[A]: Heat Pipe Roller
[B]: Exit Rollers
[C]: Heat Pipe Roller Fins
[D]: Cooling Pipe Fan

Immediately after paper leaves the fusing unit, it passes between the heat pipe roller [A] and the exit rollers [B].

The heat pipe roller absorbs heat from the paper.

Fins [C] attached to the front end of the heat pipe roller conduct heat away from the heat pipe roller.

The cooling pipe fan [D] draws in cool air and blows it through the fins to dissipate the heat conducted away from the heat pipe roller.

Downloaded from www.Manualslib.com manuals search engine

6.17.3 PAPER EXIT COOLING

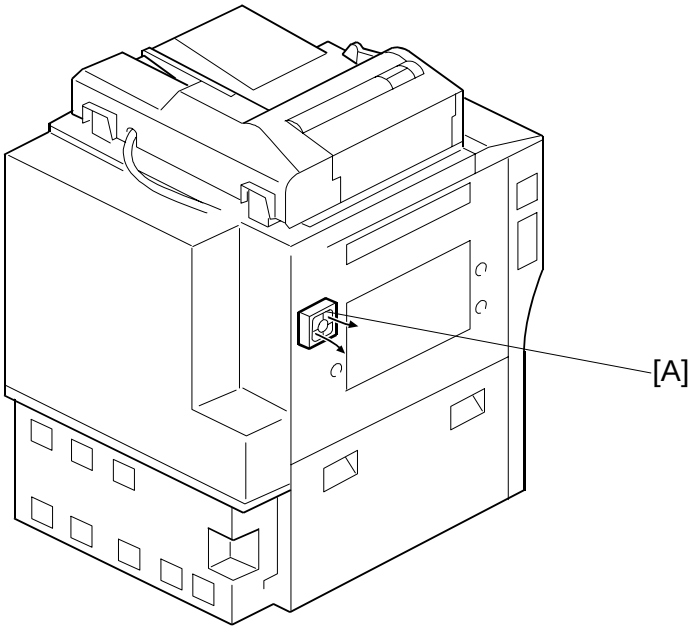

B132D966.WMF

The paper exit fan [A] draws hot air from the paper exit area and expels it through a vent on the left side of the machine.

Downloaded from www.Manualslib.com manuals search engine

6.17.4 ENERGY SAVER MODES

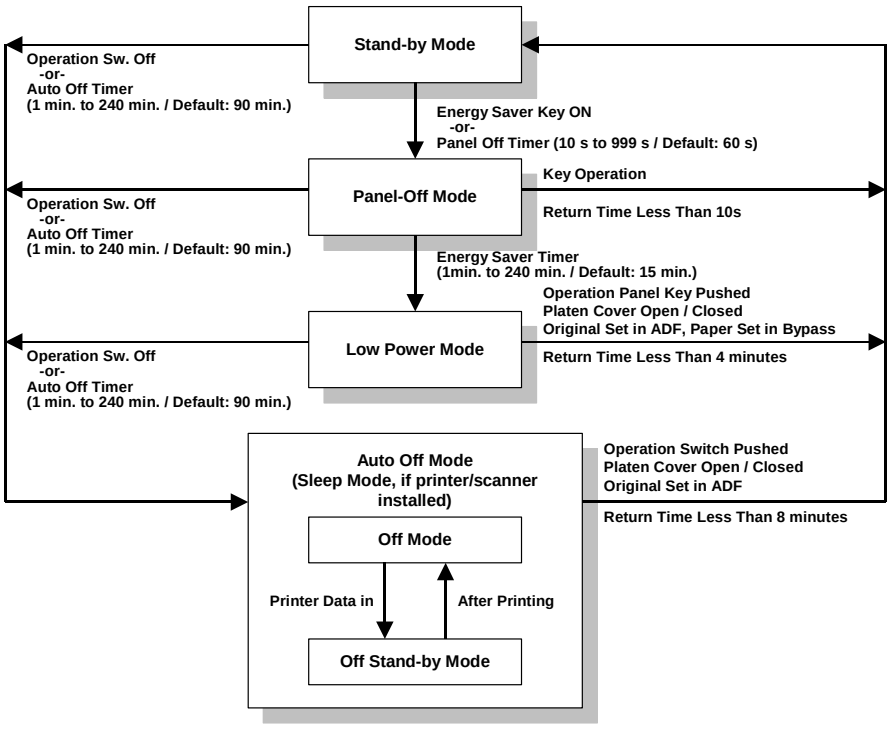

B132D933.WMF

When the machine is not being used, the energy saver function reduces power consumption by decreasing the fusing temperature.

This machine has three types of energy saver mode as follows.

1) Panel off mode (operation panel off, fusing lamps on)
2) Low power mode (fusing lamps go to a lower temperature)
3) Auto off mode (fusing lamps turn off)

Downloaded from www.Manualslib.com manuals search engine

These modes are controlled by the following user tools.

- Panel off timer: User Tools – System Settings – Timer Settings – Panel Off Timer (default 60 seconds). Maximum recovery time: 10 seconds
- Low power mode timer: User Tools – System Settings – Timer Settings – Energy Saver Timer (default 15 minutes). Maximum recovery time: 4 minutes
- Auto off timer: User Tools – System Settings – Timer Settings – Auto Off Timer (default 90 minutes). Maximum recovery time: 8 minutes
- If the printer and scanner are installed, the machine uses 'Sleep Mode' instead of Auto Off mode. This is the same as Auto Off Mode, but if a print job comes in, the printer wakes up to print the data. But if you wish to make copies, first press the operation switch.

Downloaded from www.Manualslib.com manuals search engine

A3/11”x17” PAPER SIZE TRAY
(Machine Code: B331)

Downloaded from www.Manualslib.com manuals search engine

TABLE OF CONTENTS

1. INSTRALLATION B331-1

2. REPLACEMENT AND ADJUSTMENT B331-2
2.1 BOTTOM PLATE LIFT WIRE REPLACEMENT..... B331-2

3. DETAILED DESCRIPTIONS..... B331-4
3.1 SECTIONAL DESCRIPTION..... B331-4

Downloaded from www.Manualslib.com manuals search engine

Downloaded from www.Manualslib.com manuals search engine

1. INSTALLATION

For details about installing the A3/DLT Kit B331, please refer to the instructions you received with the instructions or the “1. Installation” in the main machine service manual.

Downloaded from www.Manualslib.com manuals search engine

2. REPLACEMENT AND ADJUSTMENT

2.1 BOTTOM PLATE LIFT WIRE REPLACEMENT

NOTE: Before replacing the rear bottom plate lift wire, remove the front bottom plate lift wire. The procedure for the two wires is the same.

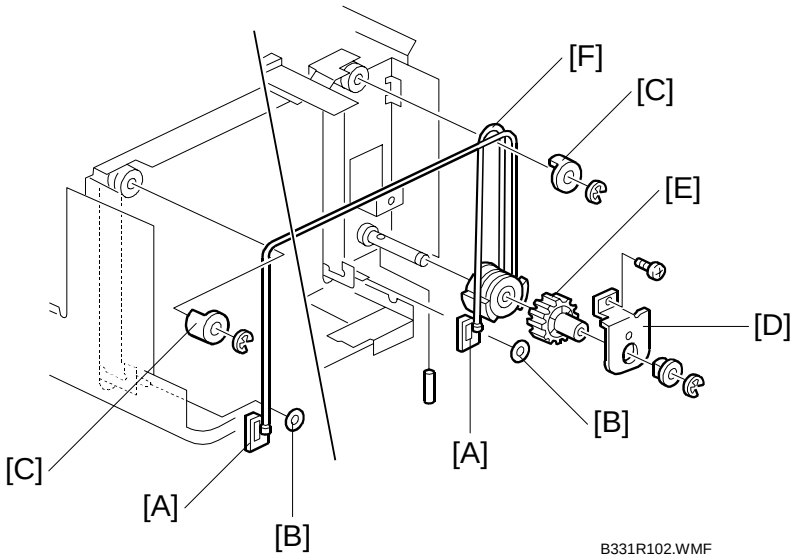

1. Remove the tray.
2. Remove the inner cover (2 screws).
3. Slightly lift the front bottom plate and unhook the wire stoppers [A] (2 stoppers [B]).
4. Remove the wire cover [C] (1 E-ring each).
5. Remove the bracket [D] (1 screw, 1 E-ring, and 1 bushing).
6. Remove the gear [E].
7. Replace the bottom plate lift wire [F].

Downloaded from www.Manualslib.com manuals search engine

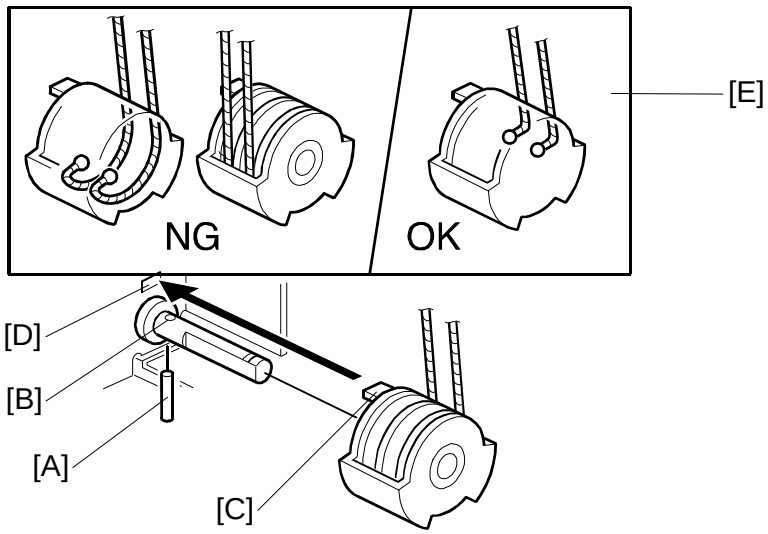

B331R061.WMF

NOTE: When re-installing the bottom plate lift wire:
1) Set the positioning pin [A] in the hole [B] and set the projection [C] in the hole [D].
2) Position the wire as shown [E].
3) Do not cross the wires.

Downloaded from www.Manualslib.com manuals search engine

3. DETAILED DESCRIPTIONS

3.1 SECTIONAL DESCRIPTION

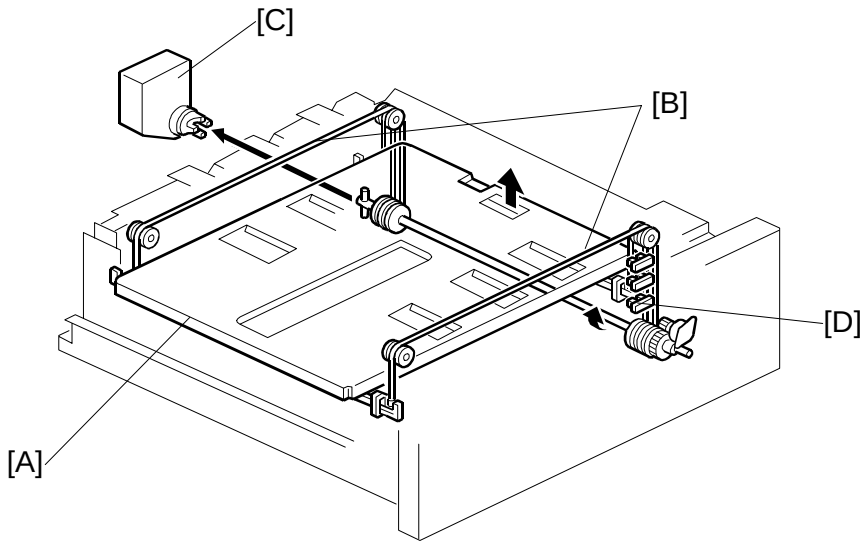

B331D201.WMF

This tray mechanism is basically same as the tandem LCT. This tray bottom plate [A] is lifted through the tray wires [B] by the lift motor [C] rotation. There is no remaining paper capacity detection.

The paper remaining sensors [D] trigger messages on the LCD to let the user know how much paper remains in the tray.

The operation panel LCD displays “full” whether there is paper in the tray. Except for the above matter, refer to the main copier tandem LCT section for details.

Downloaded from www.Manualslib.com manuals search engine

LCT (LARGE CAPACITY TRAY)
(Machine Code: B473)

Downloaded from www.Manualslib.com manuals search engine

TABLE OF CONTENTS

1. REPLACEMENT AND ADJUSTMENT B473-1

1.1 EXTERNAL COVERS..... B473-1
1.2 PICK-UP/FEED/SEPARATION ROLLERS..... B473-2
1.3 PICK-UP SOLENOID..... B473-3
1.4 PAPER END SENSOR, UPPER COVER SWITCHES..... B473-4
1.5 TRAY MOTOR..... B473-5
1.6 PAPER STACK SENSOR..... B473-5
1.7 PAPER SIZE ADJUSTMENT..... B473-6

2. DETAILS..... B473-7

2.1 OVERVIEW B473-7
2.1.1 LCT MAIN COMPONENTS B473-7
2.1.2 LCT DRIVE LAYOUT..... B473-9
2.2 PAPER FEED AND SEPARATION B473-10
2.2.1 STARTING PAPER FEED..... B473-10
2.2.2 FEED AND SEPARATION..... B473-11
2.3 PAPER LIFT B473-12
2.4 PAPER HEIGHT DETECTION B473-14
2.5 PAPER END DETECTION B473-15

Downloaded from www.Manualslib.com manuals search engine

Downloaded from www.Manualslib.com manuals search engine

1. REPLACEMENT AND ADJUSTMENT

1.1 EXTERNAL COVERS

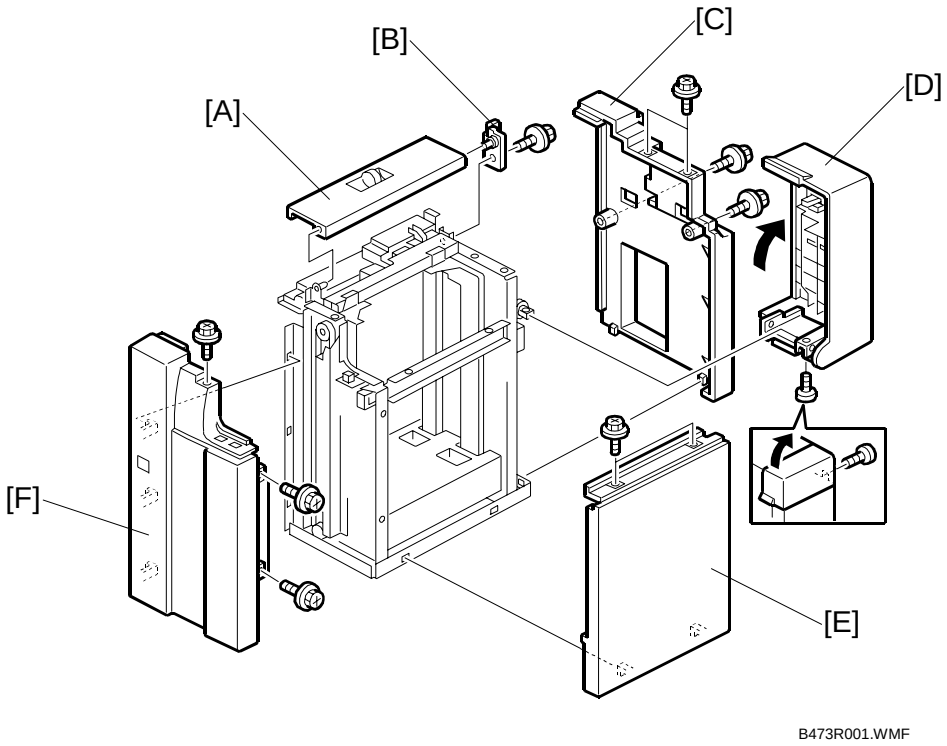

[A]: Transport cover
[B]: Transport cover hinge (☞ x1)
[C]: Rear cover (☞ x4)
[D]: Top cover (☞ x1)
[E]: Right cover (☞ x2)
[F]: Front cover (☞ x3)

Downloaded from www.Manualslib.com manuals search engine

1.2 PICK-UP/FEED/SEPARATION ROLLERS

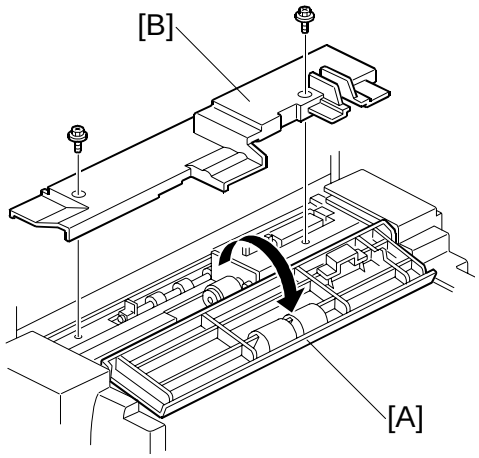

B473R002.WMF

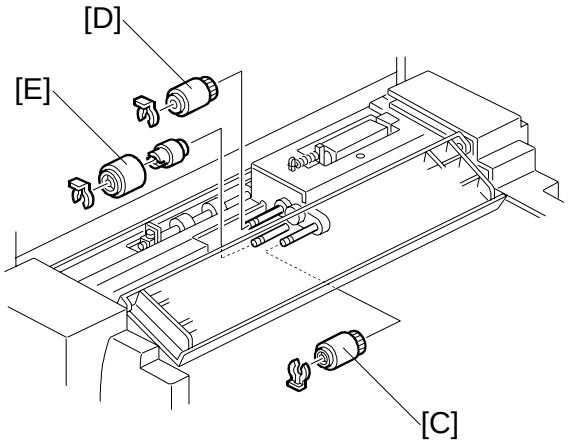

B473R003.WMF

[A]: Open the transport cover
[B]: Bracket cover (x2)
[C]: Pick-up roller (x1)
[D]: Feed roller (x1)
[E]: Separation roller (x1)

Downloaded from www.Manualslib.com manuals search engine

1.3 PICK-UP SOLENOID

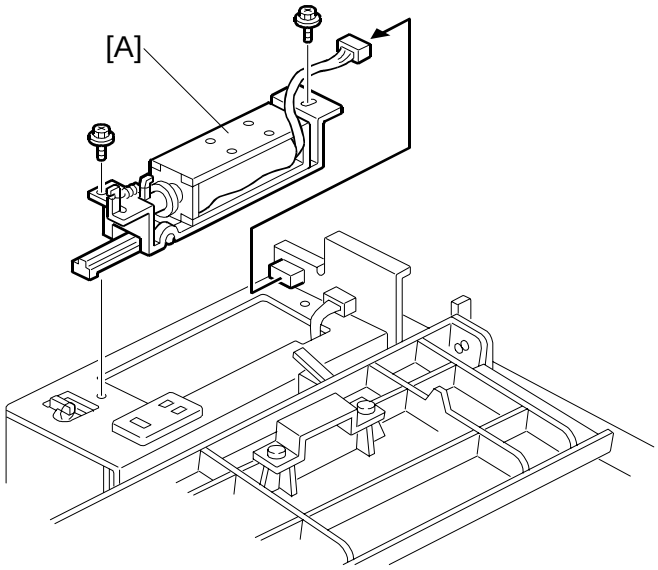

B473R004.WMF

Rear cover (☞ x4)

Open the transport cover (☛ 1.2)

Bracket cover (☛ 2.2)

[A]: Pick-up solenoid (☞ x2, ✋ x1)

Downloaded from www.Manualslib.com manuals search engine

1.4 PAPER END SENSOR, UPPER COVER SWITCHES

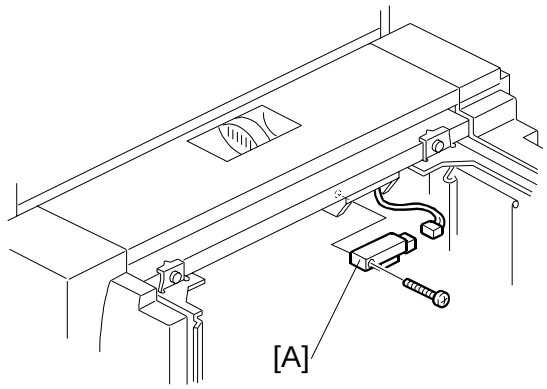

B473R005.WMF

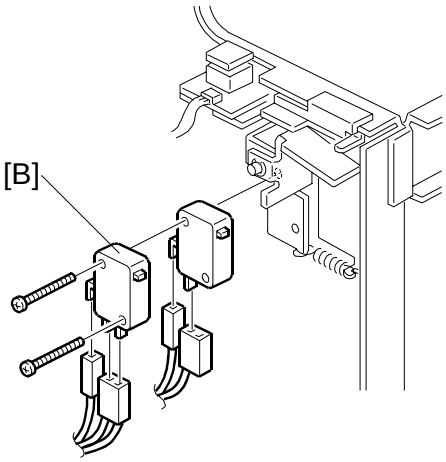

B473R006.WMF

Open the top cover.

Right cover (☛ 1.1)

[A]: Paper end sensor (☞ x1)

[B]: Upper cover switches 1, 2 (☞ x2)

Downloaded from www.Manualslib.com manuals search engine

1.5 TRAY MOTOR

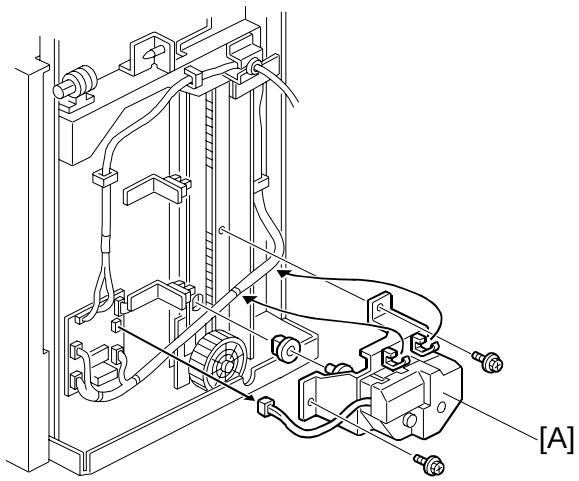

B473R007.WMF

Rear cover (☛ 1.1)
[A]: Tray motor (🔩 x2, 🖐 x1)

1.6 PAPER STACK SENSOR

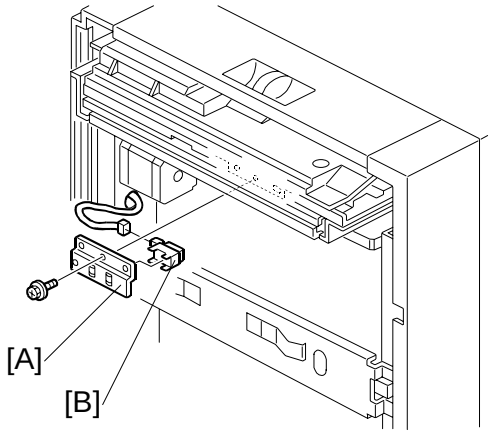

B473R008.WMF

Disconnect the LCT from the machine
[A]: Sensor cover (🔩 x1)
[B]: Paper stack sensor (🖐 x1)

Downloaded from www.Manualslib.com manuals search engine

1.7 PAPER SIZE ADJUSTMENT

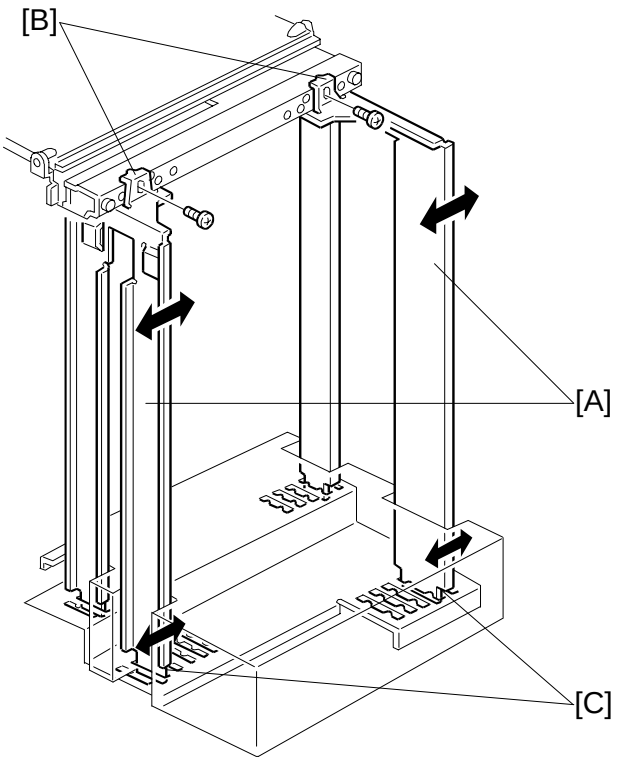

B473R109.WMF

The side fences [A] can be adjusted for A4 Sideways, B5 Sideways, or LT sideways at the top [B] and bottom brackets [C].

After changing the side fences to accept another paper size, you must execute SP5959 005 (Paper Type – Tray 4) and select the paper size of the side fence positions. For details, see SP5959 in section “5. Service Tables” of the e-STUDIO4500c/5500c service manual.

Downloaded from www.Manualslib.com manuals search engine

2. DETAILS

2.1 OVERVIEW

2.1.1 LCT MAIN COMPONENTS

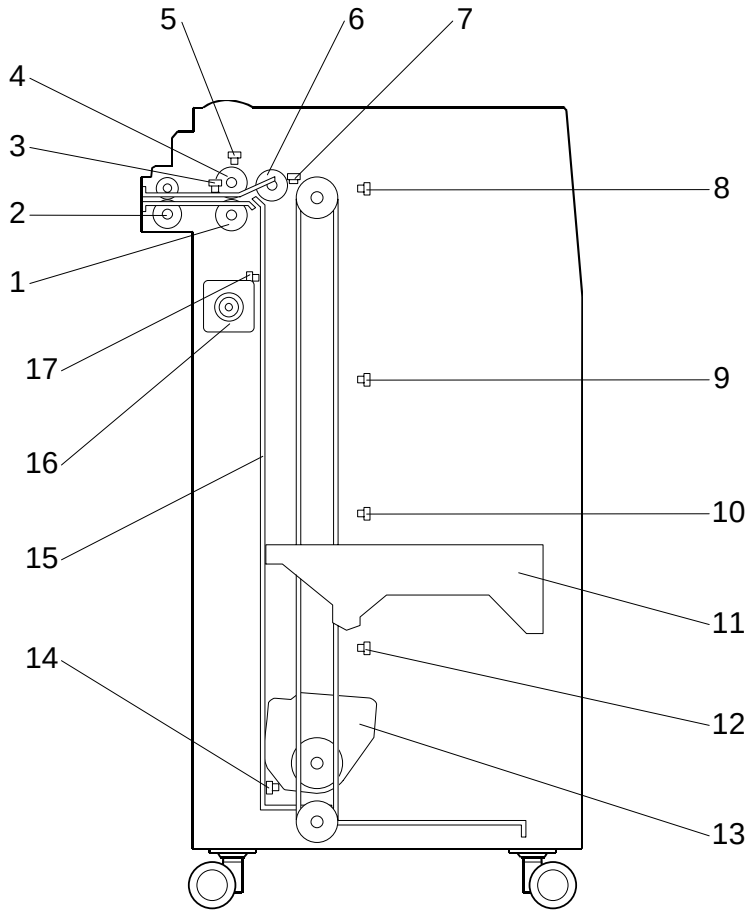

B473D001.WMF

1. Separation Roller
2. Transport Roller
3. Feed Sensor
4. Feed Roller
5. Lift Sensor
6. Pick-up Roller
7. Paper End Sensor
8. Paper Near End Sensor
9. Paper Height Sensor 1
10. Paper Height Sensor 2
11. Paper Tray
12. Paper Height Sensor 3
13. Paper Tray Motor
14. Low Limit Sensor
15. Tray Drive Belt
16. Feed Motor
17. Stack Sensor

Downloaded from www.Manualslib.com manuals search engine

Pick-up, Separation, Feed. Non-contact, maintenance free FRR sysem. (CT Handling Paper> Paper Feed Methods> **Forward and Reverse Roller (FRR)**)

Tray Lift. Tray lift motor and timing belt raise and lower the paper tray.

Paper Size Detection. The side fences cannot be adjusted by customers. The paper size must be entered with SP5959 005. For details, see SP5959 in section "5. Service Tables."

Paper Height Detection. A feeler and four photointerrupters are used.

Paper End Detection. A reflective sensor on the upper stay detects paper end.

Downloaded from www.Manualslib.com manuals search engine

2.1.2 LCT DRIVE LAYOUT

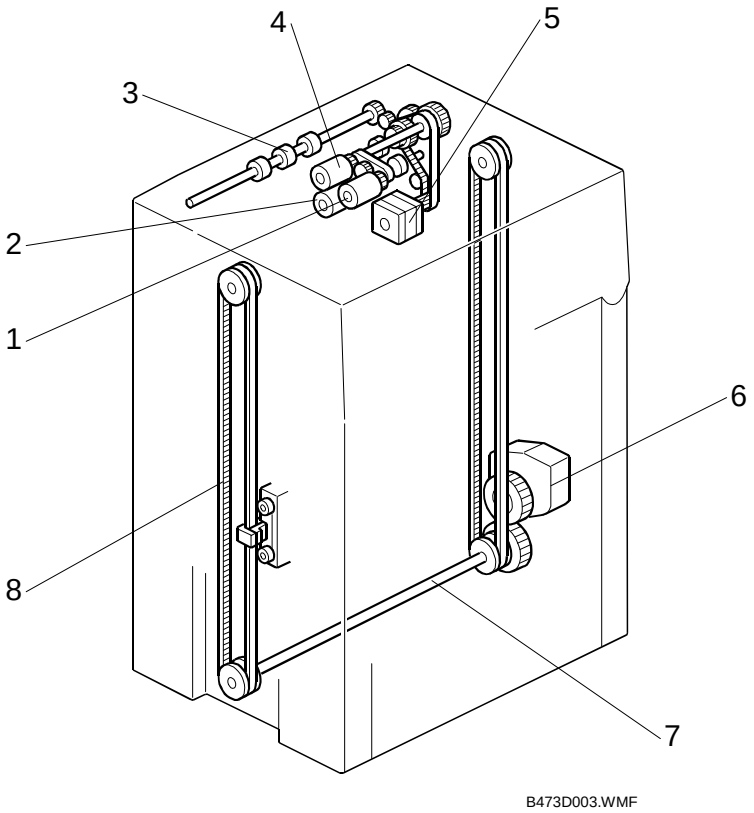

1. Pick-up Roller
2. Separation Roller
3. Transport Rollers
4. Feed Roller
5. Feed Motor
6. Tray Motor
7. Tray Lift Shaft
8. Tray Drive Belt

Downloaded from www.Manualslib.com manuals search engine

2.2 PAPER FEED AND SEPARATION

A standard FRR system is used. It consists of the pick-up, feed, and separation rollers.

2.2.1 STARTING PAPER FEED

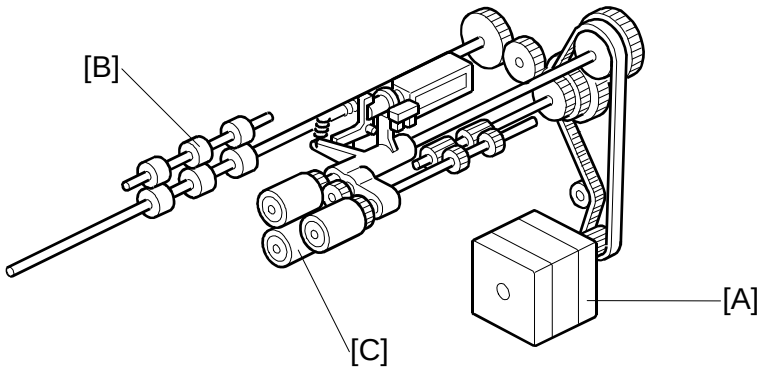

B473D004.WMF

The feed motor [A] drives the transport rollers [B].

The separation roller [C], which is free to rotate in the direction indicated by the arrow, remains at rest.

Downloaded from www.Manualslib.com manuals search engine

2.2.2 FEED AND SEPARATION

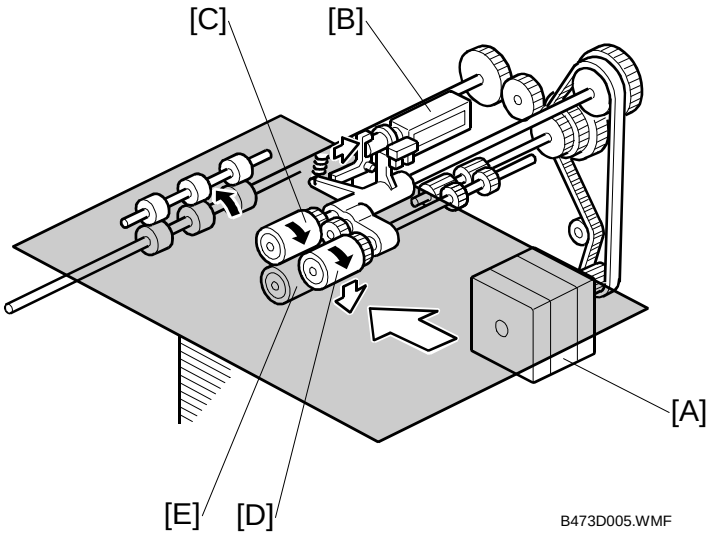

The feed motor [A] switches on, then the pick-up solenoid [B] switches on and transfers drive to the paper feed roller [C] and pick-up roller [D].

The rotating pick-up roller lowers and feeds the first sheet when it contacts the top of the stack.

The separation roller [E], in contact with the feed roller, only allows one sheet out of the tray.

As soon as the paper feed sensor (not shown) detects the leading edge of the paper, it switches off the pick-up solenoid which raises the pick-up roller. The feed roller feeds the sheet to the registration roller.

This process is repeated for each sheet.

Downloaded from www.Manualslib.com manuals search engine

2.3 PAPER LIFT

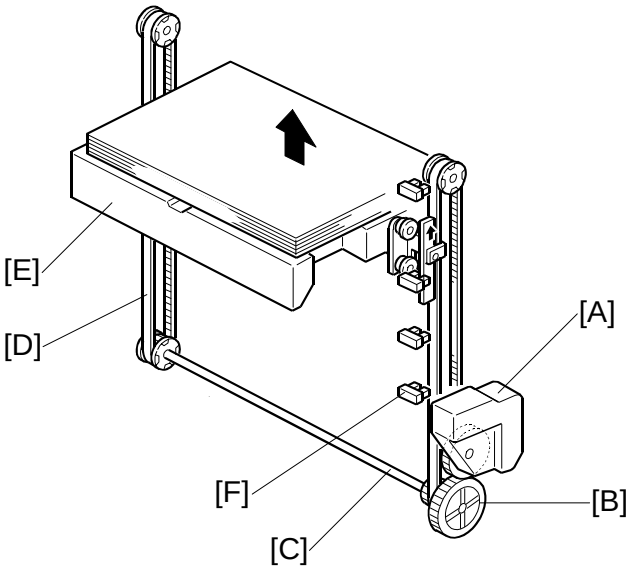

B473D006.WMF

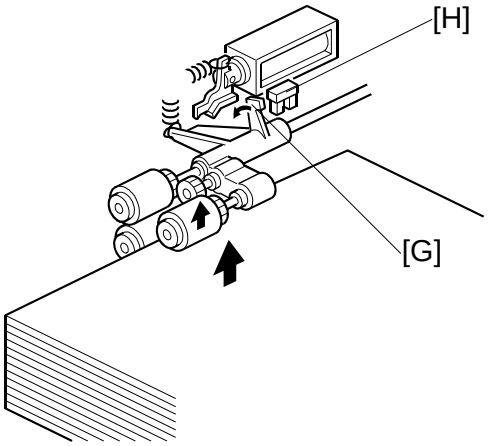

B473D158.WMF

Tray motor [A] ➔ Gear [B] ➔ Shaft [C] ➔ Tray belts [D] raise and lower the paper tray [E].

After paper is set in the LCT and the upper cover is closed, if the paper height sensor [F] is not activated, the tray motor lowers the tray and stops. When the paper height sensor activates, the tray motor lifts the tray.

After several sheets have been fed, the paper level lowers, the actuator [G] activates the lift sensor [H], and switches on the motor again. The motor raises stack until the actuator de-activates the lift sensor.

This cycle repeats to maintain the correct height of the stack until the end of the job.

Downloaded from www.Manualslib.com manuals search engine

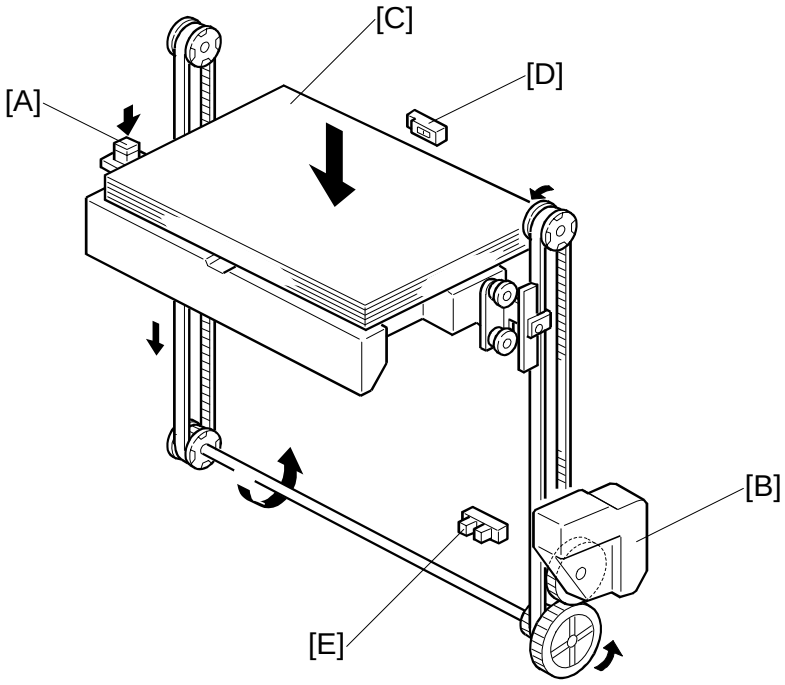

Pressing the tray down button [A] reverses the rotation of the tray motor [B] and lowers the tray [C].

The tray lowers until the stack sensor [D] detects the top of the stack and stops the tray motor.

- This mechanism lowers the tray by 5 cm, which gives the user enough space to add 500 sheets of paper.
- If the down switch is then pressed again, the bottom plate moves down once again by 5 cm. This allows the customer to replenish paper in convenient amounts and at the same position.

A lower limit sensor [E] (triggered by an actuator on the bottom of the tray) is also provided to stop the tray motor if the stack sensor should fail.

Summary

The tray raises when:

- The main power switch is turned on
- When the lift sensor switches on during copying
- The top cover is closed and the lift sensor switches on

The tray lowers when:

- The tray down button is pressed.
- The paper end sensor signals that there is no paper in the tray.

Downloaded from www.Manualslib.com manuals search engine

2.4 PAPER HEIGHT DETECTION

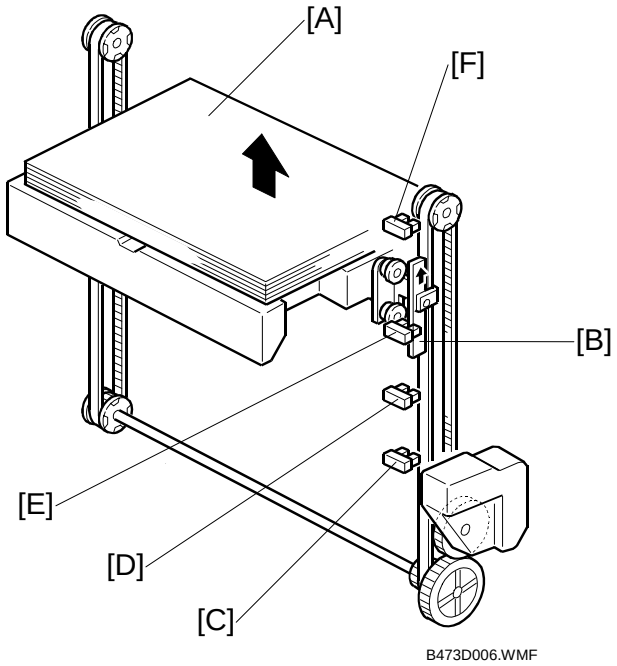

As paper is consumed from the top of the stack [A], the paper tray rises and the actuator [B] attached to the tray passes through paper height sensor 3 [C], paper height sensor 2 [D], and paper height sensor 1 [E] until the actuator reaches the paper near end sensor [F].

The operation panel displays a message for each paper height until the actuator reaches the near-end sensor, then a message warns the user that the tray is nearly empty.

The table summarizes the relation between sensor detection and the number of sheets remaining in the stack.

Sheet Remaining	Bars *1	Sensors			
		Near-end	P.Height 1	P.Height 2	P.Height 3
75	1	●	—	—	—
1500	2	❍	●	—	—
2500	3	❍	❍	●	—
3500	4	❍	❍	❍	●

*1: The number of vertical bars in the paper height display on the operation panel.

●: Actuator blocking the sensor gap.
❍: Sensor gap is open

Downloaded from www.Manualslib.com manuals search engine

2.5 PAPER END DETECTION

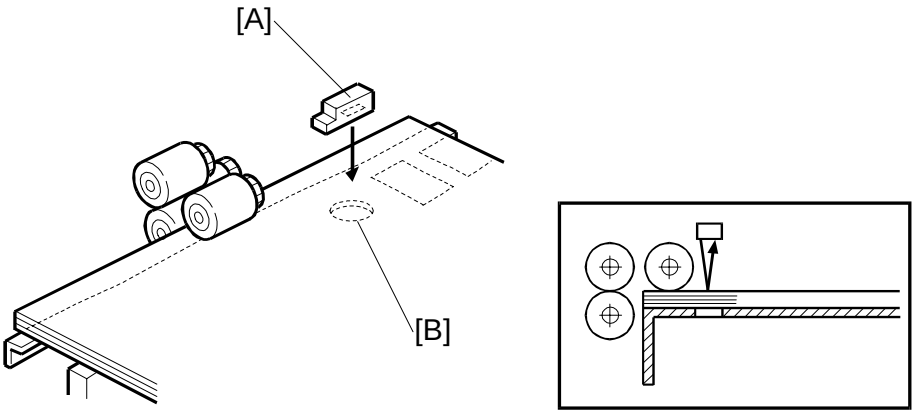

B473D111.WMF

The paper end sensor [A] monitors the light reflected by each sheet on top of the stack.

When the last sheet feeds, the cutout [B] is exposed, and the paper end sensor receives no reflected light from below because there is no paper and this signals paper end.

Downloaded from www.Manualslib.com manuals search engine

Downloaded from www.Manualslib.com manuals search engine

2000/3000-SHEET FINISHER
(Machine Code: B700/B701)

Downloaded from www.Manualslib.com manuals search engine

TABLE OF CONTENTS

1. REPLACEMENT AND ADJUSTMENT B700-1

1.1 BASIC PROCEDURES B700-1
1.1.1 COVERS B700-1
1.1.2 UPPER TRAY, END FENCE B700-2
1.2 UPPER TRAY LIMIT SENSOR, LIMIT SWITCH B700-4
1.3 POSITIONING ROLLER B700-5
1.4 PROOF TRAY EXIT SENSOR B700-6
1.5 UPPER TRAY HEIGHT SENSORS 1, 2 ..... B700-7
1.6 EXIT GUIDE PLATE, UPPER TRAY EXIT SENSOR B700-8
1.7 PROOF TRAY FULL SENSOR B700-9
1.8 FINISHER ENTRANCE SENSOR B700-10
1.9 PRE-STACK TRAY EXIT SENSOR B700-11
1.10 FOLD UNIT EXIT SENSOR B700-12
1.11 FOLD ADJUSTMENTS (B700 ONLY) B700-13
1.11.1 FOLDING HORIZONTAL SKEW ADJUSTMENT B700-13
1.11.2 FOLD VERTICAL SKEW ADJUSTMENT B700-16
1.12 CORNER STAPLER B700-17
1.13 FOLD UNIT B700-18
1.14 FOLD UNIT ENTRANCE SENSOR B700-20
1.15 STACK PRESENT SENSOR B700-21
1.16 BOOKLET STAPLER, BOOKLET STAPLER MOTOR B700-22
1.16.1 BOOKLET STAPLER B700-22
1.16.2 BOOKLET STAPLER MOTOR B700-23

Downloaded from www.Manualslib.com manuals search engine

2. DETAILS B700-24
2.1 GENERAL LAYOUT B700-24
2.2 ELECTRICAL COMPONENTS B700-26
2.2.1 UPPER AREA B700/B701 ..... B700-26
2.2.2 LOWER AREA B700/B701 ..... B700-27
2.2.3 PUNCH UNIT B702 ..... B700-28
2.2.4 STACKER/STAPLER - B700/B701 ..... B700-29
2.2.5 B700 FOLD UNIT B700-30
2.2.6 SUMMARY OF ELECTRICAL COMPONENTS B700-31
2.3 DRIVE LAYOUT B700-36
2.4 JUNCTION GATES B700-37
Proof Mode B700-37
Shift Mode B700-37
Staple Mode B700-37
2.5 PRE-STACKING B700-38
2.6 UPPER TRAY B700-40
2.7 LOWER TRAY (B700 ONLY) B700-42
2.8 CORNER STAPLING B700-44
2.8.1 STACKING AND JOGGING B700-44
2.8.2 STAPLER MOVEMENT B700-46
2.8.3 CORNER STAPLING B700-48
2.9 BOOKLET STAPLING (B700 ONLY) B700-49
2.9.1 BOOKLET PRESSURE MECHANISM B700-49
2.9.2 BOOKLET STAPLING AND FOLDING B700-50
Overview B700-50
Booklet Stapling and Folding Mechanisms B700-56
2.10 UPPER TRAY OUTPUT B700-59
2.10.1 FEED OUT B700-59
2.10.2 FEED OUT STACKING B700-61
2.11 PUNCH UNIT B702 (FOR B700/B701) B700-62
2.11.1 OVERVIEW OF OPERATION B700-62
2.11.2 PUNCH MECHANISMS B700-65
Paper Position Detection B700-65
Punch Unit Movement B700-66
Punch Selection and Firing B700-67
2.11.3 PUNCH HOPPER MECHANISM B700-68
2.12 FINISHER JAM DETECTION B700-69

Downloaded from www.Manualslib.com manuals search engine

What This Manual Contains

This manual describes two finishers, the 2000-Sheet Finisher Booklet (B700) and 3000-Sheet Finisher (B701):

- Replacement and Adjustment
- Details

For details about installation, preventive maintenance, troubleshooting, and specifications please refer to the Service Manual for e-STUDIO4500c/5500c.

2000-Sheet Booklet Finisher B700

This finisher is equipped with three trays: a proof tray on top of the finisher, an upper (shift) tray, and a lower tray for booklets.

3000-Sheet Finisher B701

This finisher is equipped with two trays: a proof tray on top of the finisher and the upper (shift) tray. This finisher does corner stapling only. It does not have the lower tray of the B700 for stapled and folded booklets.

NOTE: The descriptions in this manual apply to both finishers. Where differences between these to finisher exist, you will see the notations "B700 only" or "B701 only".

Downloaded from www.Manualslib.com manuals search engine

Downloaded from www.Manualslib.com manuals search engine

1. REPLACEMENT AND ADJUSTMENT

NOTE: Be careful not to touch the sharp edge on the guide [A] indicated in the figure.

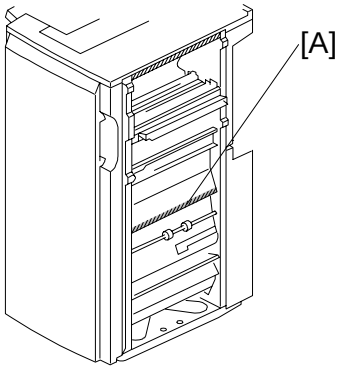

B700I209.MWF

1.1 BASIC PROCEDURES

1.1.1 COVERS

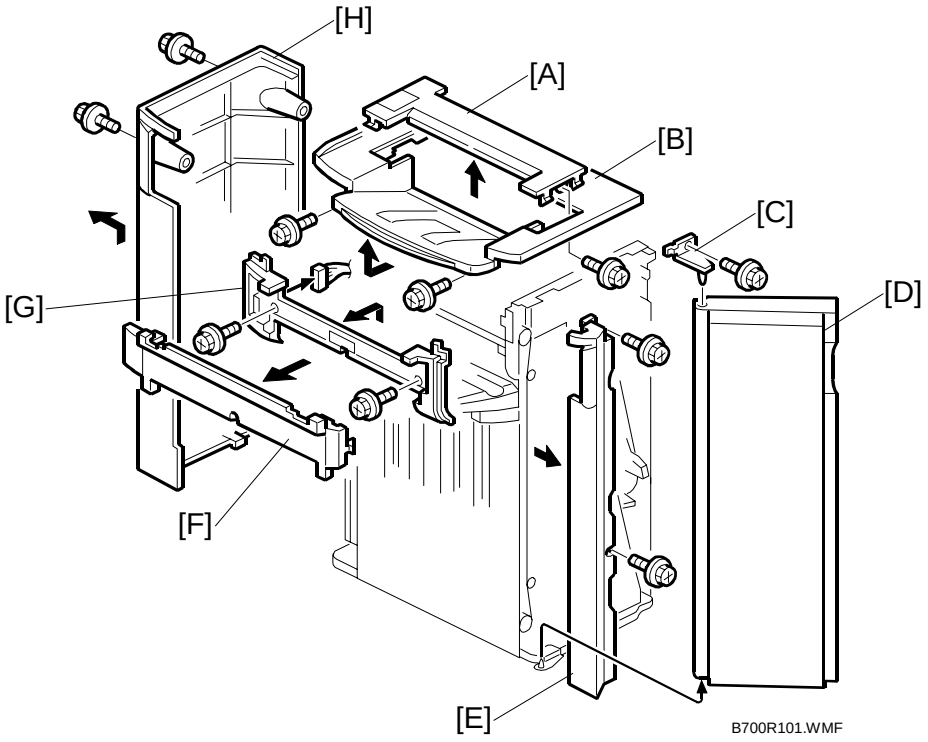

B700R101.WMF

[A]: Small Upper Cover (x1). Open the front door, remove the screw, then remove the cover.
[B]: Upper Cover (x2)
[C]: Front Door Bracket (x1)
[D]: Front Door
[E]: Front Left Side Cover (x2)
[F]: Cover
[G]: Paper Exit Cover (x2)
[H]: Rear Cover (x2)

Downloaded from www.Manualslib.com manuals search engine

1.1.2 UPPER TRAY, END FENCE

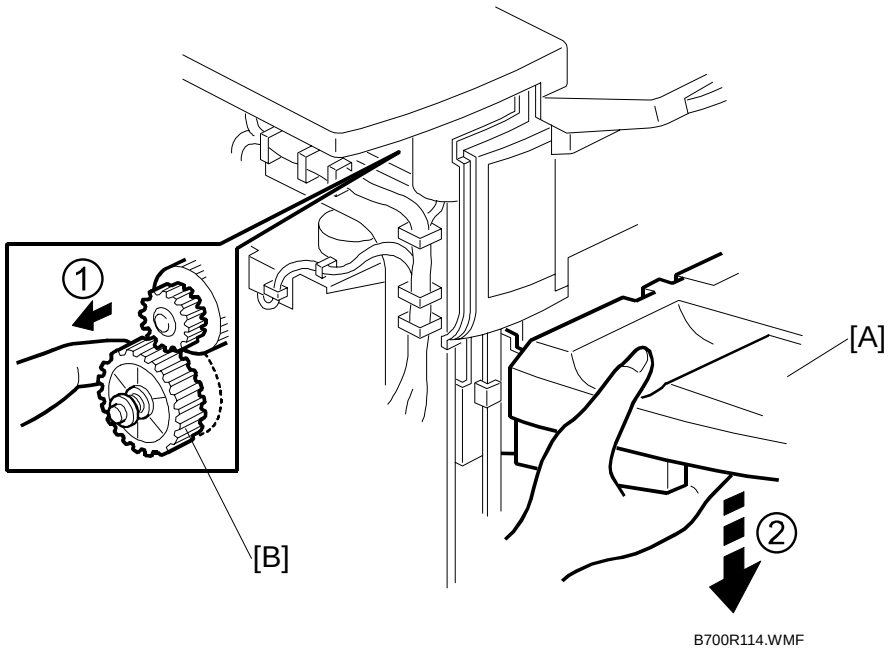

1. Remove the rear cover. (☛1.1.1)
2. To lower the upper tray:
   - Support the tray [A] with your right hand.
   - Pull gear [B] toward you ① to release.
   - Slowly lower the tray ② until it stops.

Downloaded from www.Manualslib.com manuals search engine

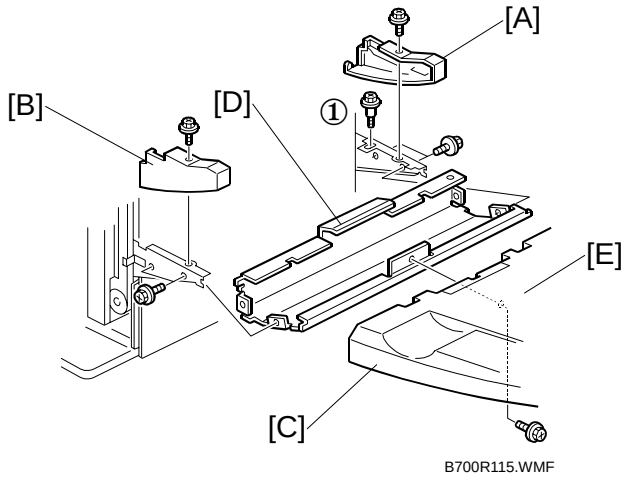

B700R115.WMF

[A]: Front Side Cover (x1)
[B]: Rear Side Cover (x1)
[C]: Upper Tray (x1)
[D]: Tray Bracket (x4, x1 shoulder screw ①)
[E]: End Fence (x3)

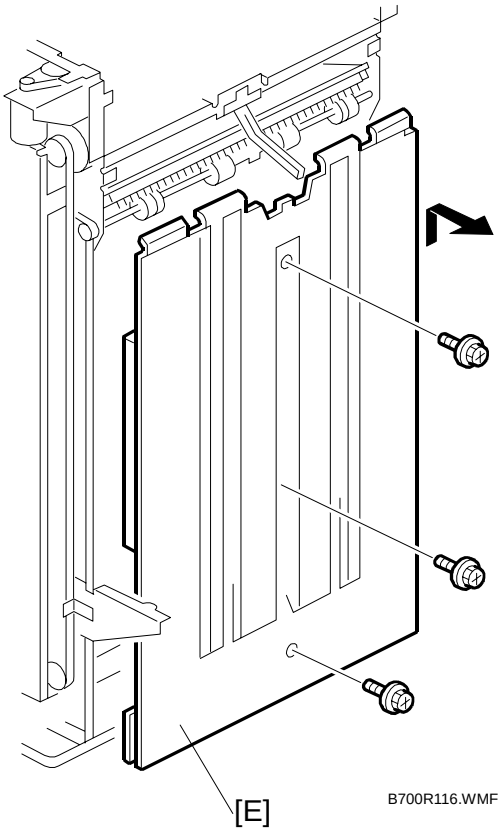

B700R116.WMF

Downloaded from www.Manualslib.com manuals search engine

1.2 UPPER TRAY LIMIT SENSOR, UPPER TRAY LIMIT SWITCH

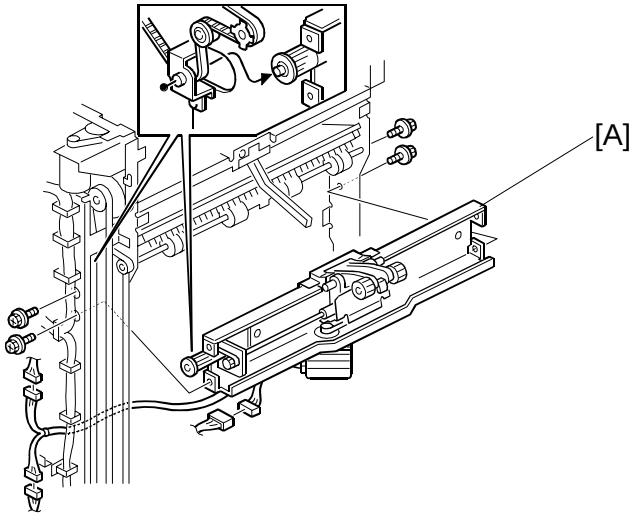

B700R117.WMF

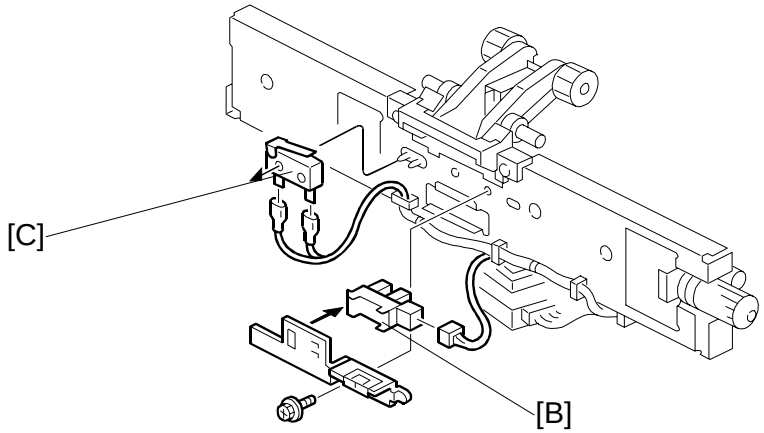

B700R118.WMF

Remove:

- Front door, front left side cover, rear cover, upper cover (☛1.1.1)
- End fence (☛1.1.2)

[A]: Upper tray exit mechanism (x4, x3)
[B]: Upper tray limit sensor (x1, x1)
[C]: Upper tray limit switch (x2)

Downloaded from www.Manualslib.com manuals search engine

1.3 POSITIONING ROLLER

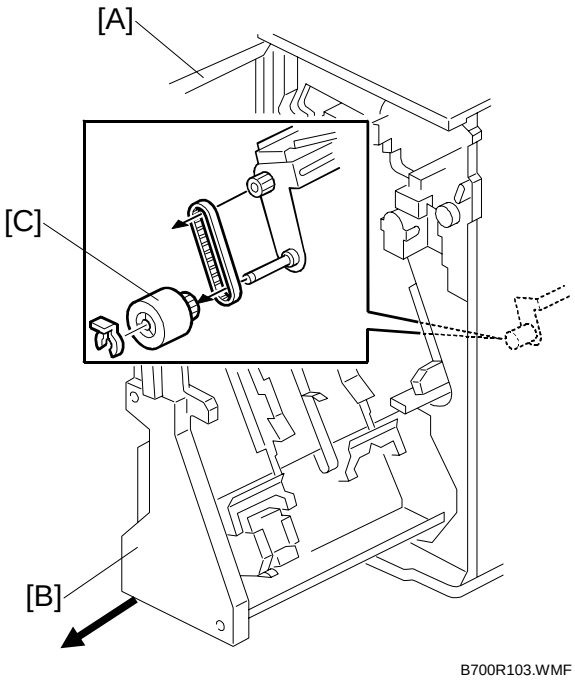

[A]: Open the front door.
[B]: Pull out the stapler unit.
[C]: Positioning roller (x1, timing belt x1)

Downloaded from www.Manualslib.com manuals search engine

1.4 PROOF TRAY EXIT SENSOR

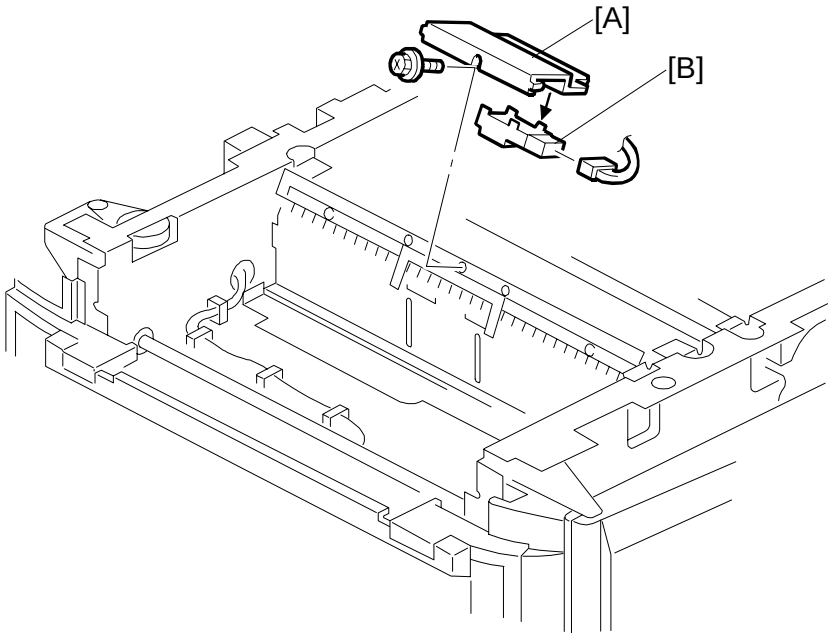

B700R107.WMF

- Remove small upper cover (☛1.1.1)

[A]: Proof Tray Exit Sensor Bracket (x1)
[B]: Proof Tray Exit Sensor (S10) (x1)

Downloaded from www.Manualslib.com manuals search engine

1.5 UPPER TRAY PAPER HEIGHT SENSORS 1, 2

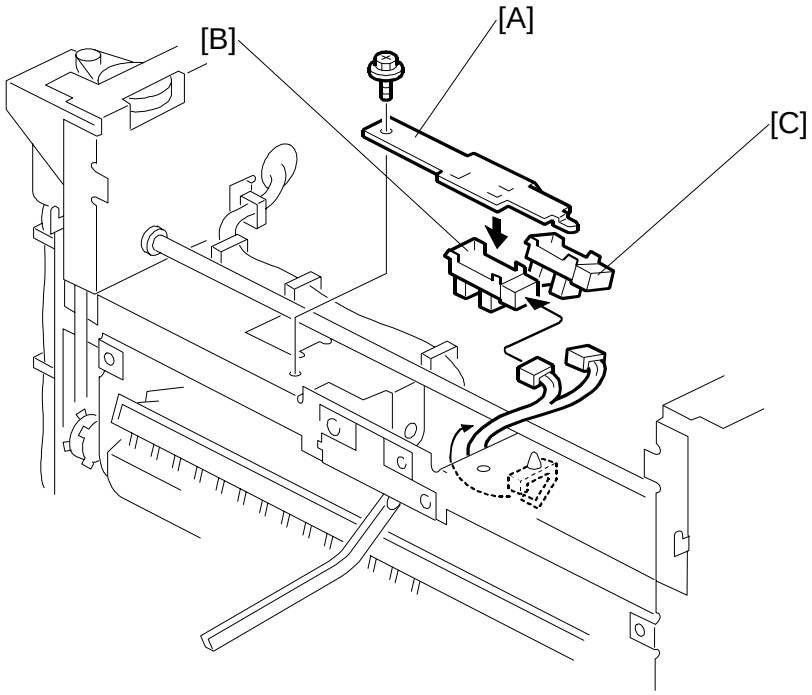

B700R108.WMF

- Remove small upper cover, upper cover (☛1.1.1)

[A]: Upper Tray Paper Height Sensor Bracket (🔩 x1)
[B]: Upper Tray Paper Height Sensor 1 – Staple Mode (S08) (✋ x1)
[C]: Upper Tray Paper Height Sensor 2 – Non-Staple Mode (S09) (✋ x1)

Downloaded from www.Manualslib.com manuals search engine

1.6 EXIT GUIDE PLATE, UPPER TRAY EXIT SENSOR

Remove:

- Rear cover (☛1.1.1)
- Upper covers (☛1.1.1)
- Front door (☛1.1.1)
- Cover (☛1.1.1)
- Paper exit cover (☛1.1.1)

[A]: Inner cover (x2)

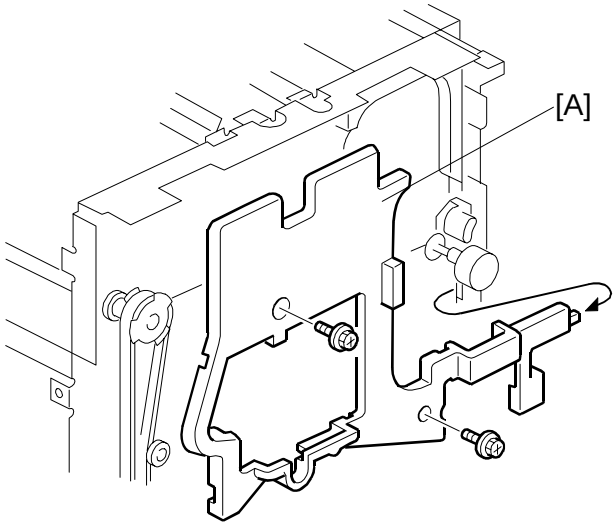

B700R109.WMF

[B]: Exit guide plate
- ① x1
- ② Link and spring
- ③ x1
- ④ x1

[C]: Upper tray exit sensor (S6) (x1)

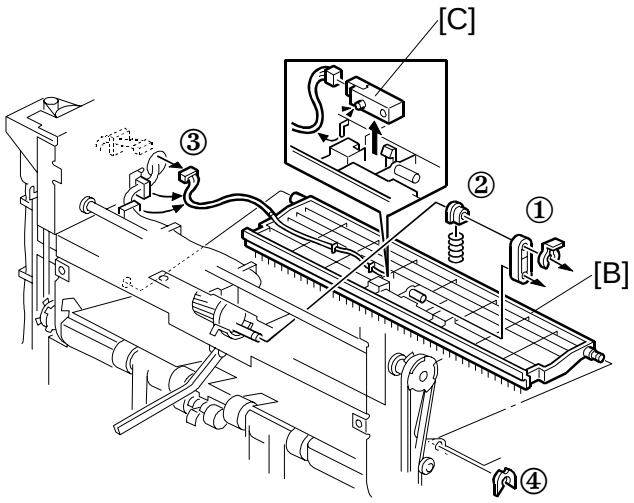

B700R110.WMF

Downloaded from www.Manualslib.com manuals search engine

1.7 PROOF TRAY FULL SENSOR

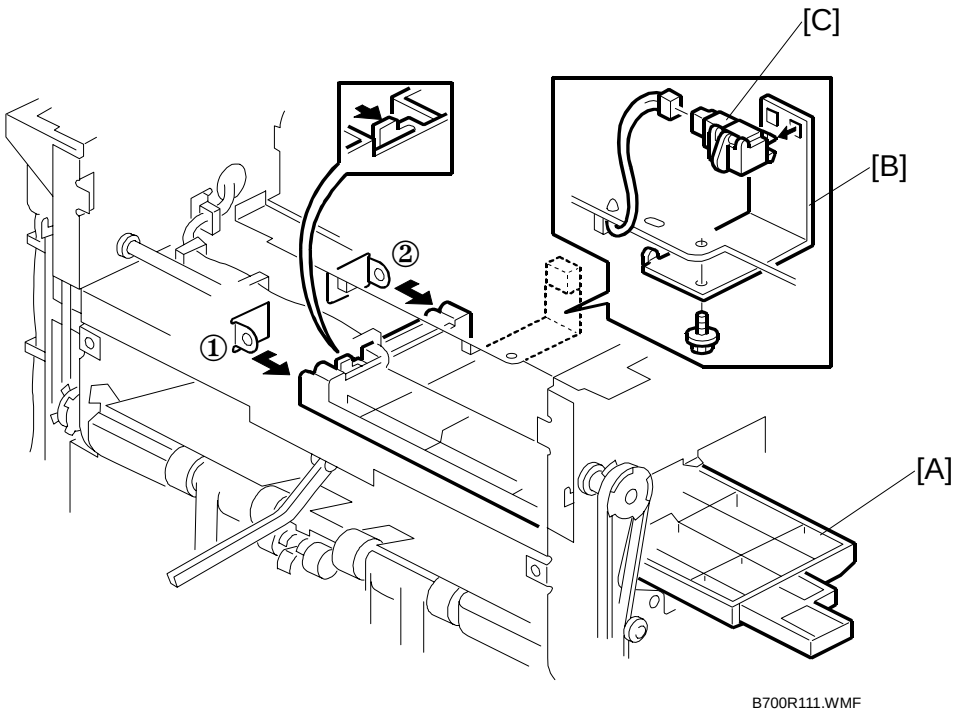

B700R111.WMF

- Remove the exit guide plate. (☛1.6)

[A]: Guide plate. Disconnect at ①, ②
[B]: Sensor bracket (🔩 x1)
[C]: Proof tray full sensor (S11) (🖑 x1)

Downloaded from www.Manualslib.com manuals search engine

1.8 FINISHER ENTRANCE SENSOR

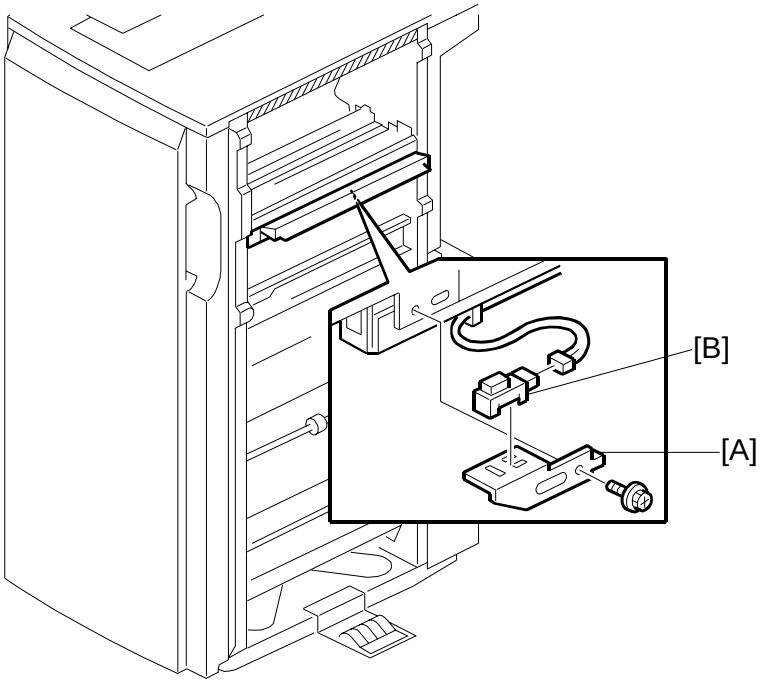

B700R133.WMF

- Disconnect the finisher if it is connected to the copier.
- Disconnect the cover interposer if it is installed.

[A]: Sensor bracket (☞ x1)
[B]: Finisher entrance sensor (S1) (☞ x1)

Downloaded from www.Manualslib.com manuals search engine

1.9 PRE-STACK TRAY EXIT SENSOR

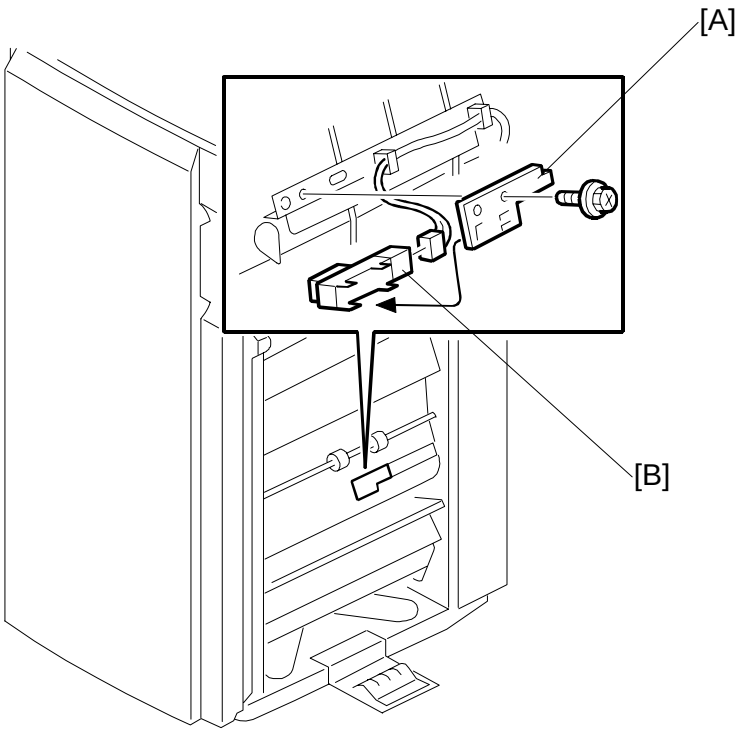

B700R102.WMF

- Disconnect the finisher if it is connected to the copier.

[A]: Sensor bracket
[B]: Pre-stack tray exit sensor (S2)

Downloaded from www.Manualslib.com manuals search engine

1.10 FOLD UNIT EXIT SENSOR

- Open the front door.
- Pull out the stapler tray.

[A]: Fold unit vertical guide plate

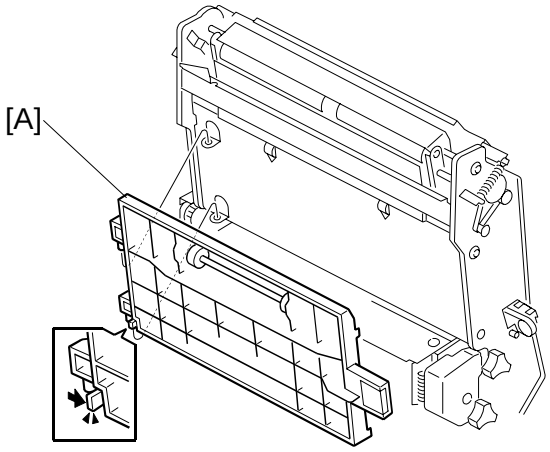

B700R121.WMF

[B]: Fold unit inner cover
(☞ x2, Spring pin x1)

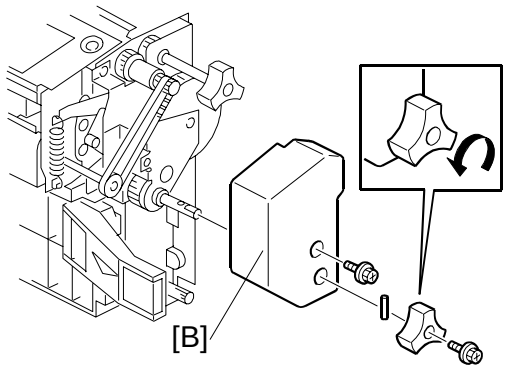

B700R125.WMF

[C]: Fold unit upper cover (☞ x1)
[D]: Paper clamp mechanism (☞ x4)
[E]: Fold unit exit sensor bracket (☞ x1)
[F]: Fold unit exit sensor (S31) (☞ x1)

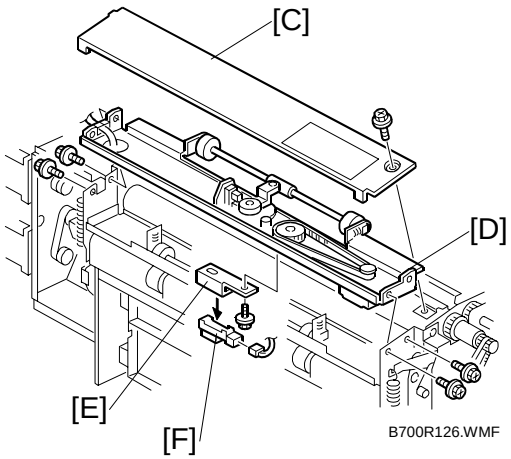

B700R126.WMF

Downloaded from www.Manualslib.com manuals search engine

1.11 FOLD ADJUSTMENTS (B700 ONLY)

1.11.1 FOLDING HORIZONTAL SKEW ADJUSTMENT

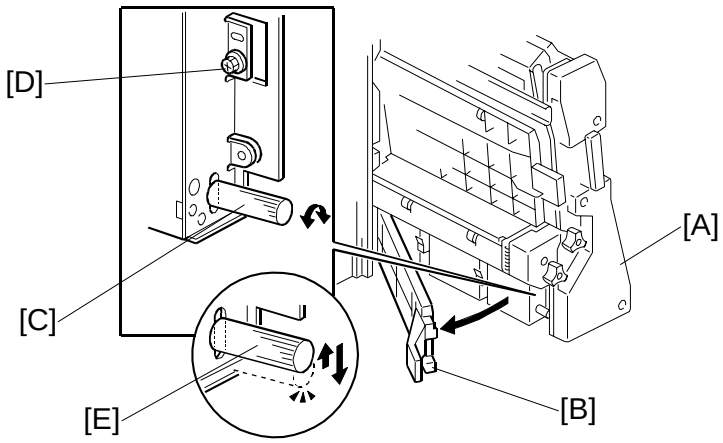

B700R802.WMF

Important

- The fold unit is adjusted for optimum performance before the finisher is shipped from the factory. Do this adjustment only if the edges of folded booklets are not even.

1. Switch the copier on and enter the SP mode.
2. Europe, Asia: Use **SP 6113 001** (this is for A3 paper).
   North America: Use **SP 6113 005** (this is for DLT paper).
   NOTE: If the original setting of SP6113 001 or 005 is not 0, then you must do the vertical skew adjustment (☛1.11.2) after you finish this horizontal skew procedure.
3. Use the 10-key pad to input "**-2**" (mm) for the SP value.
   NOTE: (Press [•/✱] to enter the minus sign.)
4. Press [#] then exit the SP mode.
5. Open the front door and pull the stapler unit [A] out of the finisher.
6. Open the guide plate [B].
7. Loosen the adjustment screw [C] and then tighten until it stops. (Do not over tighten.)
8. Remove the lock screw [D].
9. Raise the tip [E] of the adjustment screw very slightly and allow it to descend under its own weight.

Downloaded from www.Manualslib.com manuals search engine

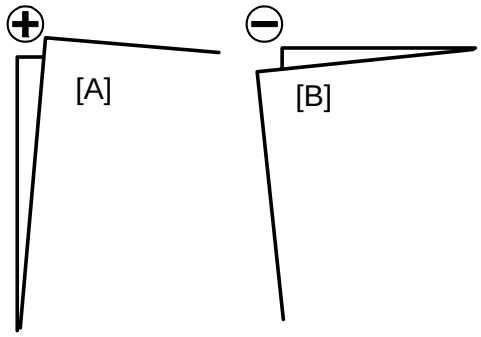

B700R901.WMF

10. Push the stapler unit into the finisher and close the front door.
11. Do a folding test.
    - Switch the copier on.
    - Put one page of A3 or DLT paper in the ARDF.
    - On the copier operation panel, select booklet stapling.
    - Press [Start]. One sheet is folded.
12. Remove the sheet from the lower tray.
13. Hold the folded sheet with the creased side pointing down and face-up (the same way that it came out of the finisher).
14. Referring to the diagram, determine if the skew is **+** [A] or **–** [B].

Downloaded from www.Manualslib.com manuals search engine

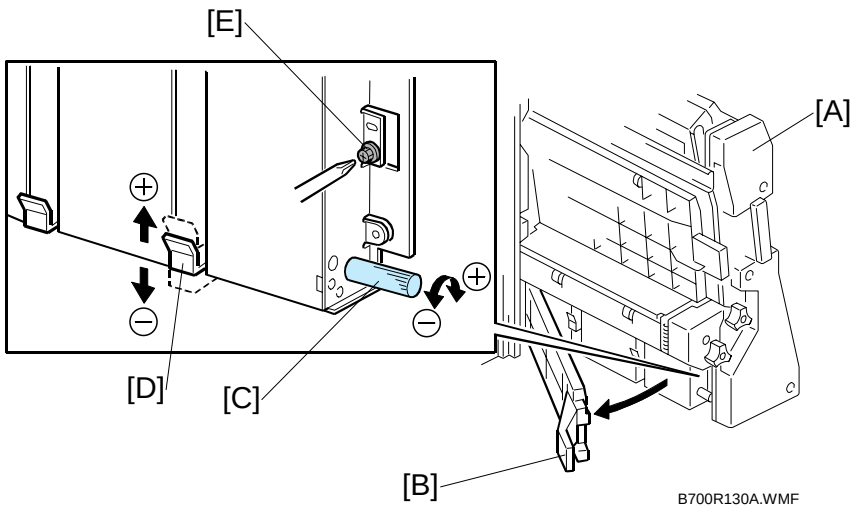

15. Open the front door of the finisher and pull the stapler unit [A] out.
16. Open the guide plate [B].
17. Turn the adjustment screw [C] to correct the amount of skew you measured from the test sheet.
    - For **+ skew ([A] on the previous page)**, turn the adjustment screw (clockwise).
    - For **– skew ([B] on the previous page)**, turn the adjustment screw to the left (counter-clockwise).
    - Every click in the +/– direction adjusts the fold position by 0.1 mm by moving the bottom fence [D]
18. Raise the tip of the adjustment screw [C] and allow it to lower under its own weight.
19. Attach and tighten the lock screw [E].
20. Push the stapler unit into the machine, close the front door, then turn the copier on.
21. Europe, Asia: Do **SP 6113 001** (this is for A3 paper).
    North America: Do **SP 6113 005** (this is for DLT paper).
22. Reset it to "**0**".
23. Do the test again.
24. If the result is satisfactory, this completes the adjustment.
    -or-
    If some skew remains, repeat this adjustment.
    NOTE: After doing this adjustment, adjust for vertical skew, if necessary. (☛1.11.2).

Peripherals

Downloaded from www.Manualslib.com manuals search engine

1.11.2 FOLD VERTICAL SKEW ADJUSTMENT

Important

- The fold unit is adjusted for optimum performance before the finisher is shipped from the factory. Do this adjustment only if the edges of folded booklets are not even.

1. Switch the copier on.
2. Do a folding test.
   - Switch the copier on.
   - Put one page of A3 or DLT paper in the ARDF.
   - On the copier operation panel, select booklet stapling.
   - Press [Start]. One sheet is folded.
3. Hold the folded sheet with the creased side pointing down, and face-up (the same way that it came out of the finisher).
4. Referring to the diagram, determine if the skew is positive [A] or negative [B].

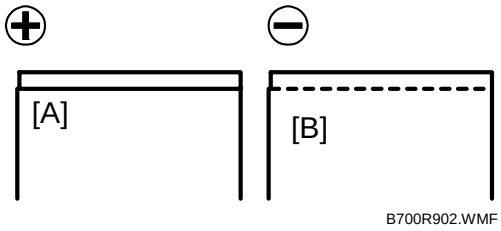

B700R902.WMF

5. Measure the amount of skew.
6. Enter the SP mode
   - Europe, Asia: Use **SP 6113 001** (this is for A3 paper).
   - North America: Use **SP 6113 005** (this is for DLT paper).
7. Enter one-half the measured amount of skew.
   Example: If the measure amount of skew is -1.2 mm, enter -0.6 mm
   NOTE: The range for measurement is –3.0 mm to +3.0 mm in 0.2 mm steps for every notch adjustment.
8. Exit the SP mode and do the test again (steps 2 to 5).
9. Repeat this procedure until the skew is corrected.
   The illustration below shows the effects of +/- adjustment with **SP6113.** (The vertical arrows show the direction of paper feed.)

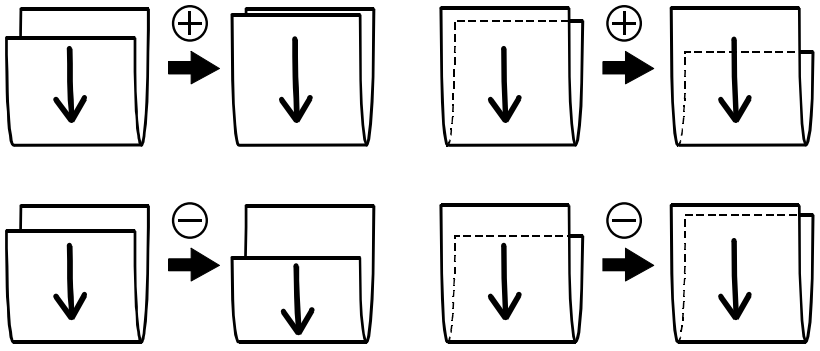
B700R135.WMF

Downloaded from www.Manualslib.com manuals search engine

1.12 CORNER STAPLER

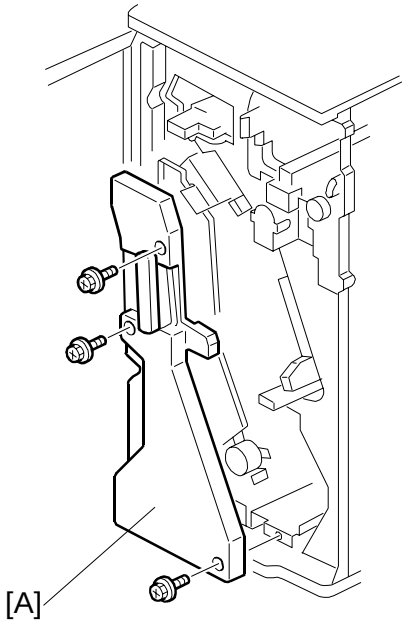

B700R112.WMF

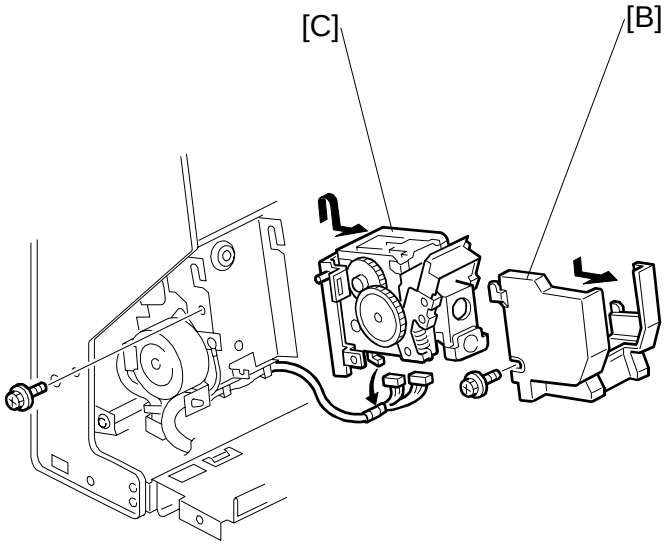

B700R113.WMF

- Open the front door.
- Pull out the stapler unit

[A]: Inner cover (x3)
[B]: Stapler unit holder (x1)
[C]: Corner stapler (M20) (x1)

Downloaded from www.Manualslib.com manuals search engine

1.13 FOLD UNIT

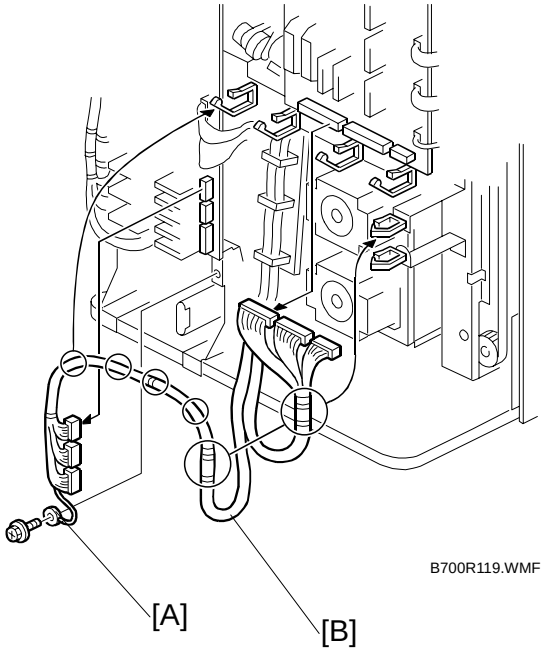

B700R119.WMF

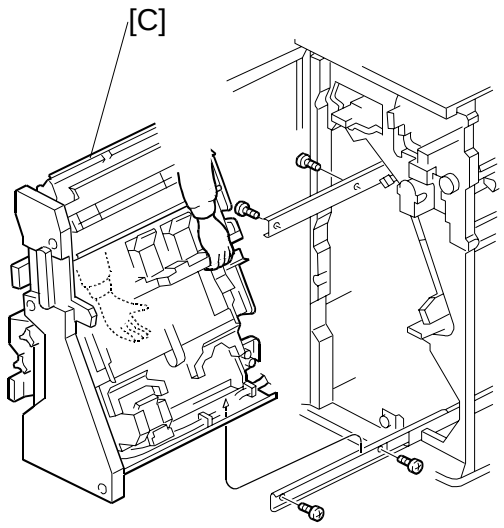

B700R801.WMF

- Remove the back cover (☛1.1.1)
- Open the front door.

CAUTION: The stapler unit is heavy.

[A]: Ground screw (x1)
[B]: Harness (x6, x6)
[C]: Stapler unit (x4)

Downloaded from www.Manualslib.com manuals search engine

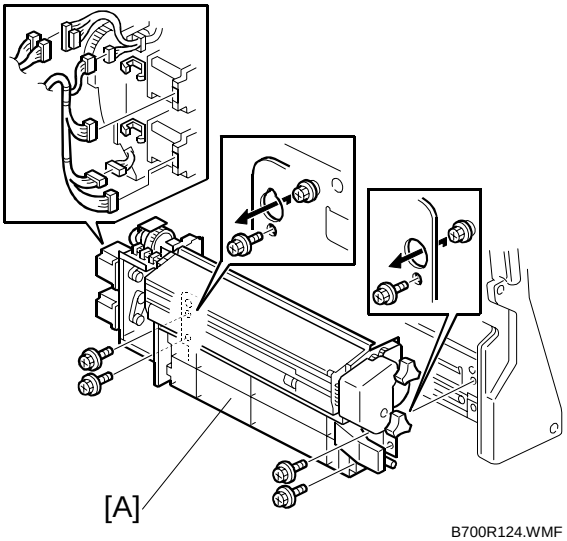

B700R124.WMF

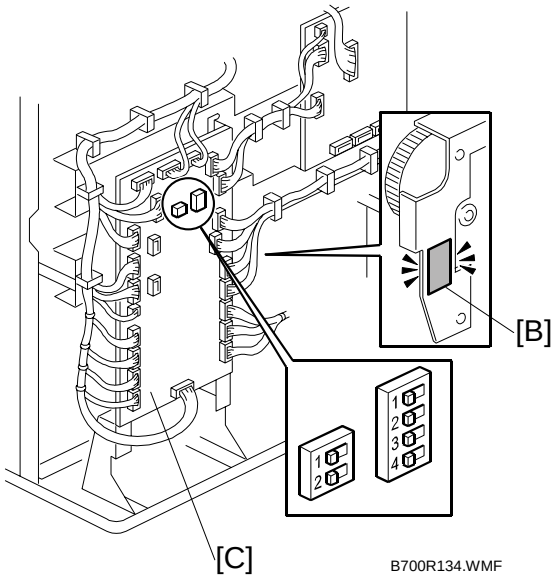

B700R134.WMF

Important: Support the fold unit with your hand to prevent it from falling.

CAUTION: The fold unit is heavy.

[A]: Fold unit (x4, x2, x6)

If you have replaced the fold unit:

1. Read the DIP SW settings on the decal [B] attached to the back of the new fold unit.
2. Check the DIP SW settings on the main board [C] of the finisher.
3. If these settings are different, change these settings to match settings printed on the seal attached to the fold unit.
   NOTE: Set DIP switches 1 to 4 (the switch set on the right). Do not touch the other DIP switches.

Downloaded from www.Manualslib.com manuals search engine

1.14 FOLD UNIT ENTRANCE SENSOR

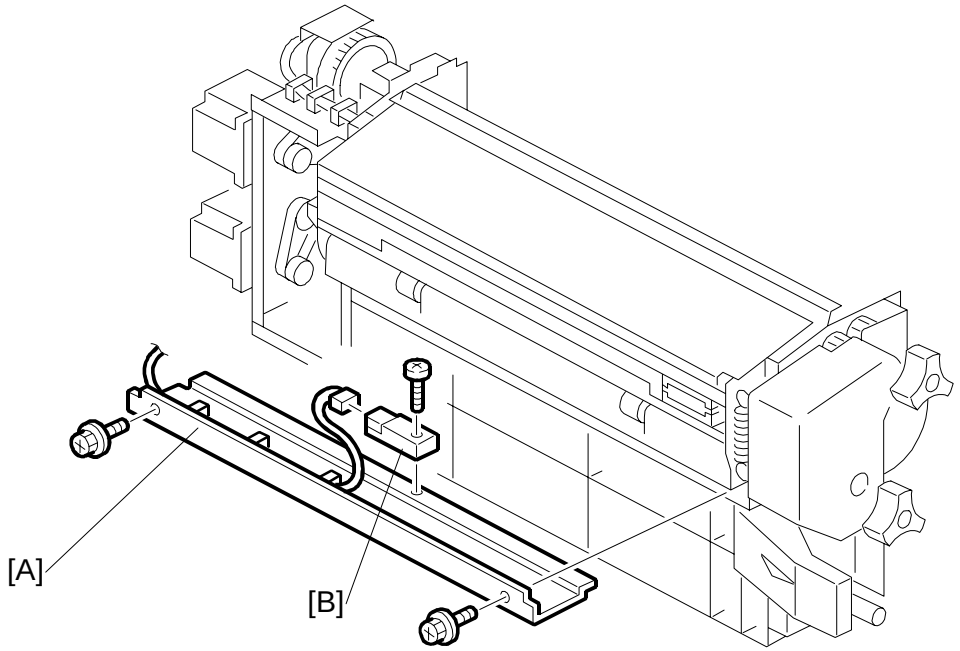

B700R132.WMF

- Pull out the stapler unit.

[A]: Fold unit entrance sensor bracket (x2)
[B]: Fold unit entrance sensor (S26) (x1, x1)

Downloaded from www.Manualslib.com manuals search engine

1.15 STACK PRESENT SENSOR

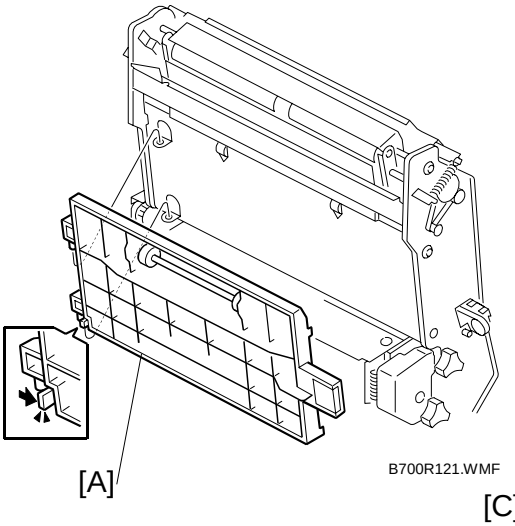

B700R121.WMF

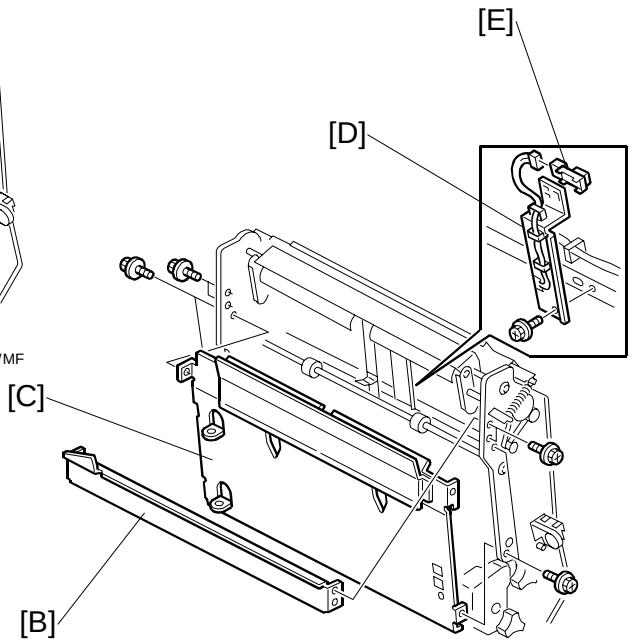

B700R122.WMF

Important: If you intend to correct the horizontal and vertical skew for the fold unit at the same time, do those adjustments first, then replace the sensor. (☛1.11.1, 1.11.2)

- Remove the stapler unit (☛1.13)

[A]: Guide plate.
[B]: Stay (x4)
[C]: Left plate (x4)
[D]: Sensor bracket (x1)
[E]: Stack present sensor (S32) (x1)

Downloaded from www.Manualslib.com manuals search engine

1.16 BOOKLET STAPLER, BOOKLET STAPLER MOTOR

1.16.1 BOOKLET STAPLER

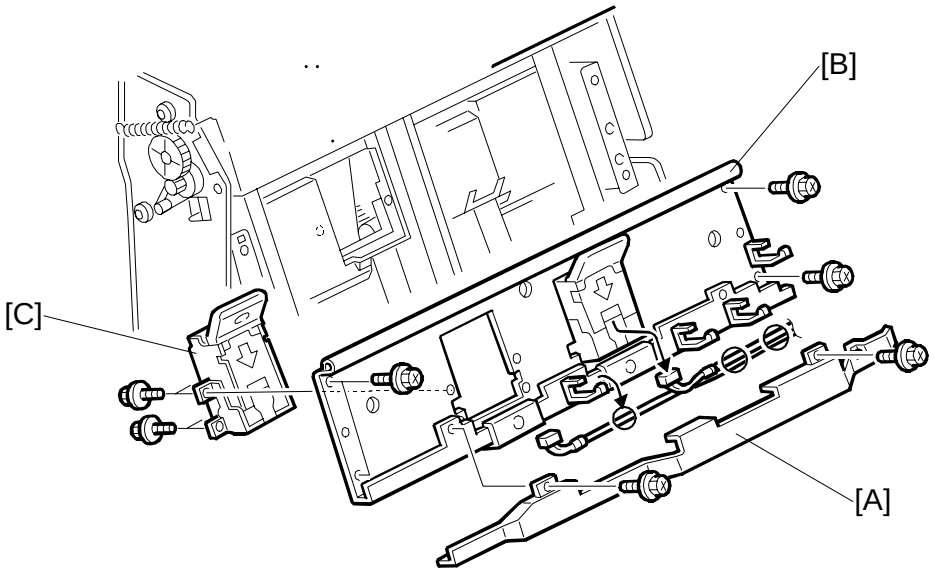

- Open the front door.
- Pull out the stapler unit.

[A]: Harness cover (x2)
[B]: Booklet stapler support stay (x4, x2, x4)
[C]: Stapler (x4)

Downloaded from www.Manualslib.com manuals search engine

1.16.2 BOOKLET STAPLER MOTOR

- Open the front door.
- Remove the stapler unit. (☛1.13)

1. Remove:

[A]: Stay (☞ x4).
[B]: Left plate (☞ x4).

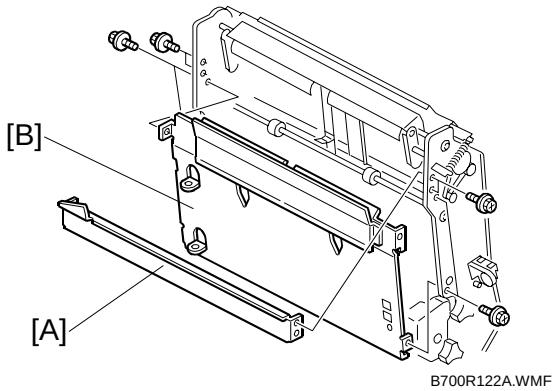

B700R122A.WMF

2. Remove:

[C]: Harness cover (☞ x2)
[D]: Booklet stapler support stay (☞ x4, ✋ x2, ⇦x4)
[E]: Booklet stapler (☞ x4)
[F]: Booklet stapler motor (☞ x2, ✋ x1)

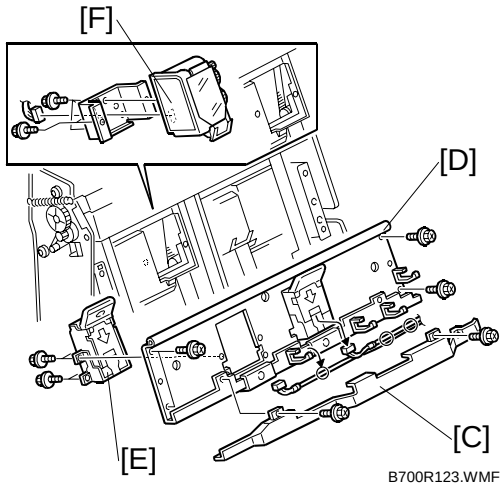

B700R123.WMF

To Reattach the Booklet Stapler Motor

3. Reattach the booklet stapler motor.
   Important: Do not tighten the screws.

4. Attach the special tool [G] and reattach the booklet stapler stay.
   NOTE: This tool is included with the stapler spare part.
5. Turn the gear [H] with your finger until it stops.
6. Tighten the screws to attach to the booklet stapler motor.
7. Remove the stay again and remove the special tool.
8. Reattach the booklet stapler stay.
9. Push the stapler unit into the machine.

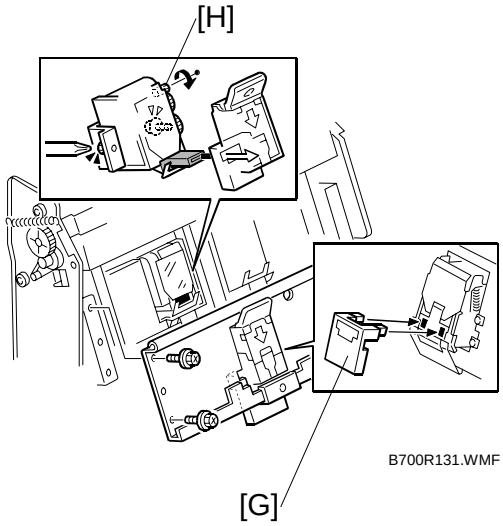

B700R131.WMF

Downloaded from www.Manualslib.com manuals search engine

2. DETAILS

2.1 GENERAL LAYOUT

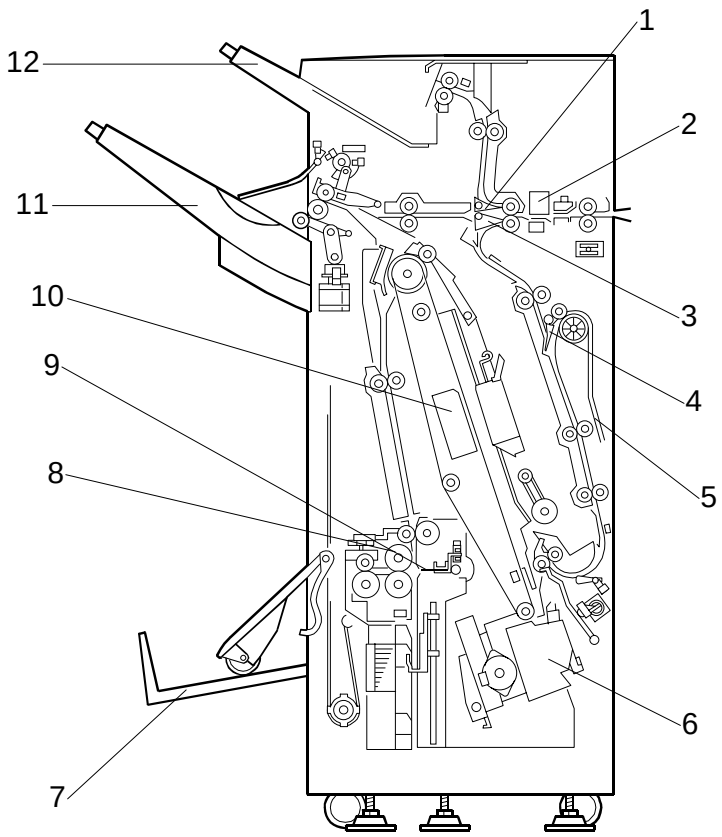

B700D101.WMF

1. Proof Tray Junction Gate
2. Punch Unit
3. Stapler Junction Gate
4. Pre-Stack Junction Gate
5. Pre-Stack Tray
6. Corner Stapler (M20)
7. Lower Tray (Booklet)*[1]
8. Folder Rollers*[1]
9. Folder Plate*[1]
10. Booklet Stapler*[1]
11. Upper Tray (Shift)
12. Proof Tray

*[1] **B700 Only**

Downloaded from www.Manualslib.com manuals search engine

Paper direction

The operation of the proof tray and stapler junction gates direct the flow of the paper once it enters the finisher:

Proof Junction Gate	Stapler Junction Gate	Paper Feeds
Closed	Closed	Paper feeds straight through
Open	Closed	Paper feeds to the proof tray
Closed	**Open**	Paper feds to the staple tray

Proof tray

Copies are sent to the proof tray (12) when neither sorting nor stapling are selected for the job.

Upper tray

The upper tray (11) receives copies that are sorted and shifted and also receives copies that have been corner stapled. Corner stapling is provided on both the B700 and the B701.

Pre-stack tray

The pre-stack tray (5) has a switchback mechanism to increase the productivity of stapling. (☛2.5) Pre-stacking is done for corner stapling in the B700/B701 and for booklet stapling in the B700.

Lower tray

The lower tray (7) receives copies that have been center folded and stapled (booklet stapling). Booklet stapling is not provided on the B701.

Downloaded from www.Manualslib.com manuals search engine

2.2 ELECTRICAL COMPONENTS

2.2.1 UPPER AREA B700/B701

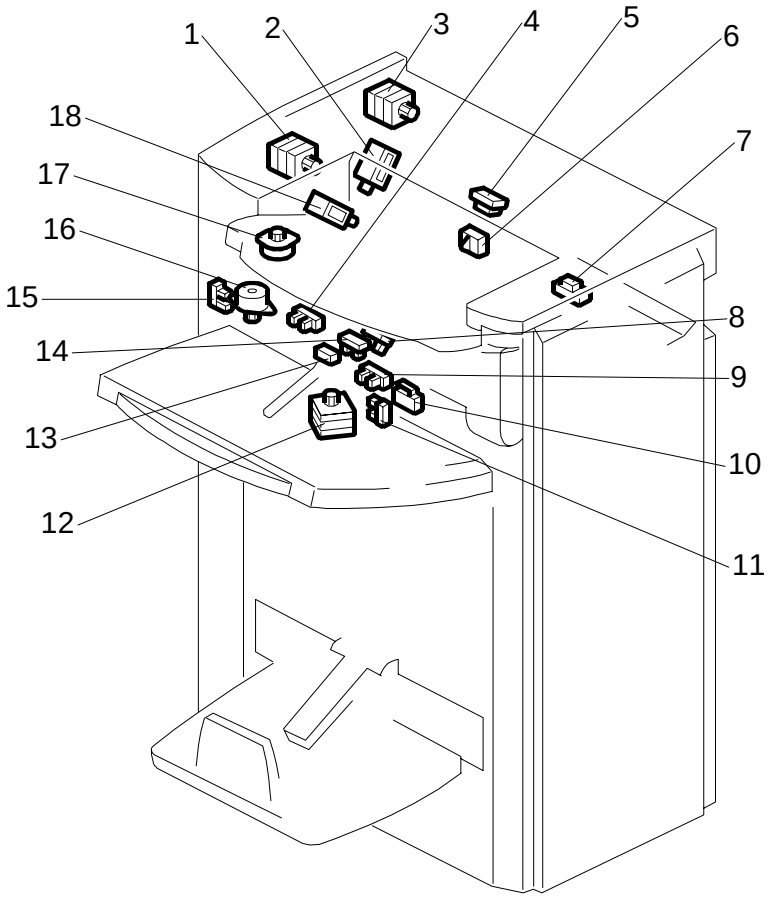

B700D201.WMF

1. Upper/Proof Exit Motor (M4)
2. Stapling Tray Junction Gate Solenoid (SOL2)
3. Upper Transport Motor (M2)
4. Exit Guide Plate HP Sensor (S7)
5. Proof Tray Exit Sensor (S10)
6. Proof Tray Full Sensor (S11)
7. Finisher Entrance Sensor (S1)
8. Upper Tray Paper Height Sensor (S9) (Non-Staple Mode)
9. Upper Tray Limit Sensor (S12)
10. Upper Tray Limit Switch (SW2)
11. Stacking Roller HP Sensor (S13)
12. Stacking Sponge Roller Motor (M10)
13. Upper Tray Exit Sensor (S6)
14. Upper Tray Paper Height Sensor (S8) (Staple Mode)
15. Shift Roller HP Sensor (S5)
16. Shift Roller Motor (M18)
17. Exit Guide Plate Motor (M19)
18. Proof Junction Gate Solenoid (SOL1)

Downloaded from www.Manualslib.com manuals search engine

2.2.2 LOWER AREA B700/B701

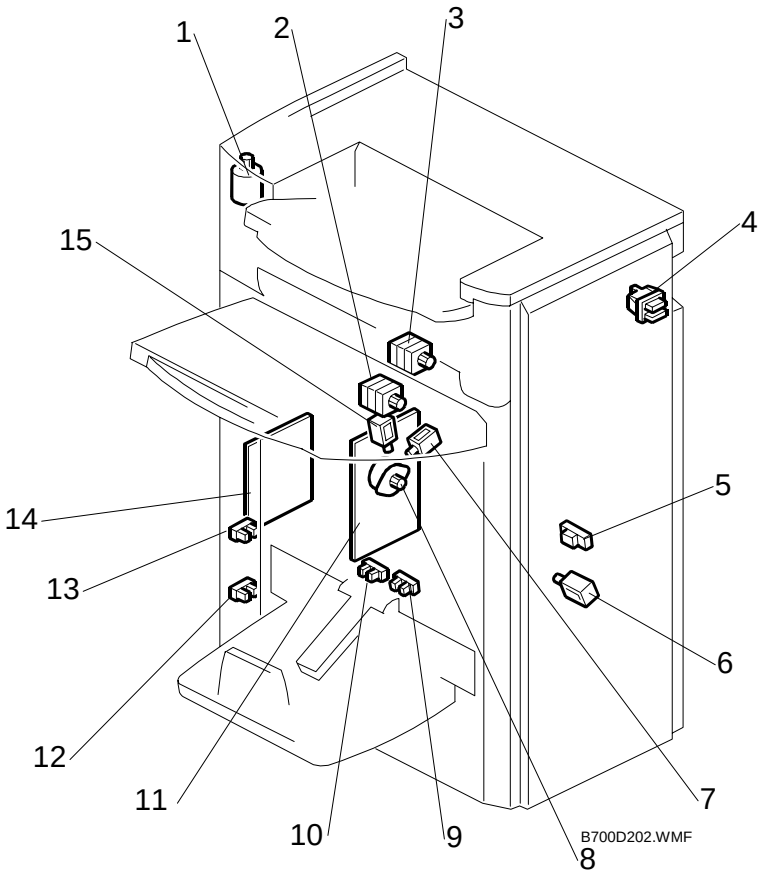

1. Upper Tray Lift Motor (M21)
2. Lower Transport Motor (M3)
3. Entrance Motor (M1)
4. Front Door Safety Switch (SW1)
5. Pre-Stack Tray Exit Sensor (S2)
6. Stapling Edge Pressure Plate Solenoid (SOL4)
7. Positioning Roller Solenoid (SOL3)
8. Positioning Roller Motor (M14)
9. Lower Tray Full Sensor – Front (S34)*1
10. Lower Tray Full Sensor – Rear (S33)*1
11. Main Board (PCB1)
12. Upper Tray Full Sensor – (S20) *2
13. Upper Tray Full Sensor – (S19)
14. Booklet Stapler Board (PCB2)*1
15. Booklet Pressure Roller Solenoid – (SOL5) *1

*1 B700 Only

*2 B701 Only

Peripherals

Downloaded from www.Manualslib.com manuals search engine

2.2.3 PUNCH UNIT B702

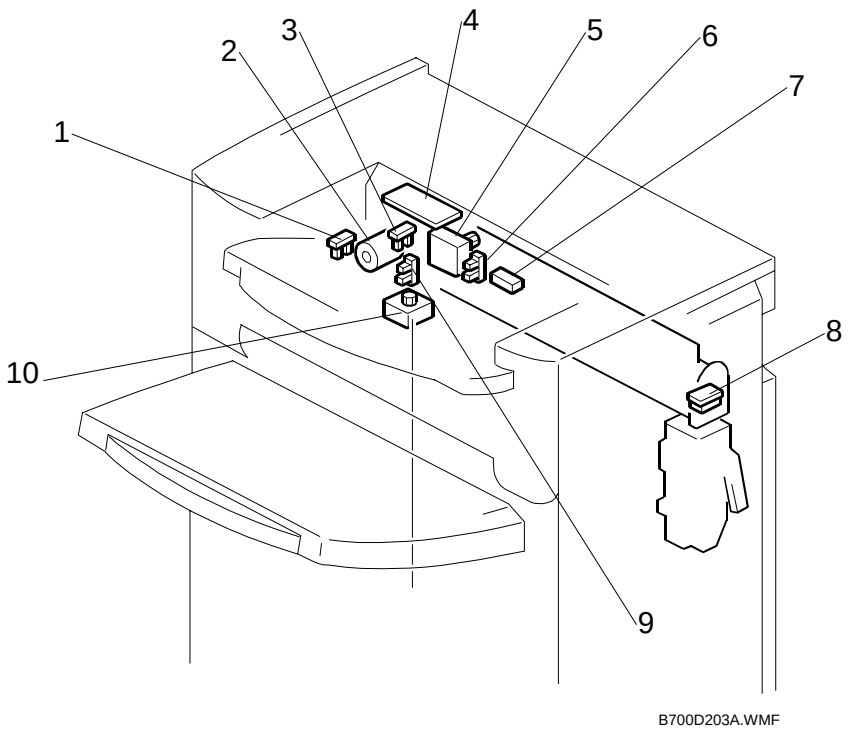

1. Punch Encoder Sensor (S24)
2. Punch Drive Motor (M24)
3. Punch HP Sensor (S24)
4. Punch Unit Board (PCB3)
5. Paper position sensor slide motor (M7)
6. Paper Position Slide HP Sensor (S22)
7. Paper Position Sensor (S3)
8. Punch Hopper Full Sensor (S4)
9. Punch Movement HP Sensor (S21)
10. Punch Movement Motor (M9)

Downloaded from www.Manualslib.com manuals search engine

2.2.4 STACKER/STAPLER - B700/B701

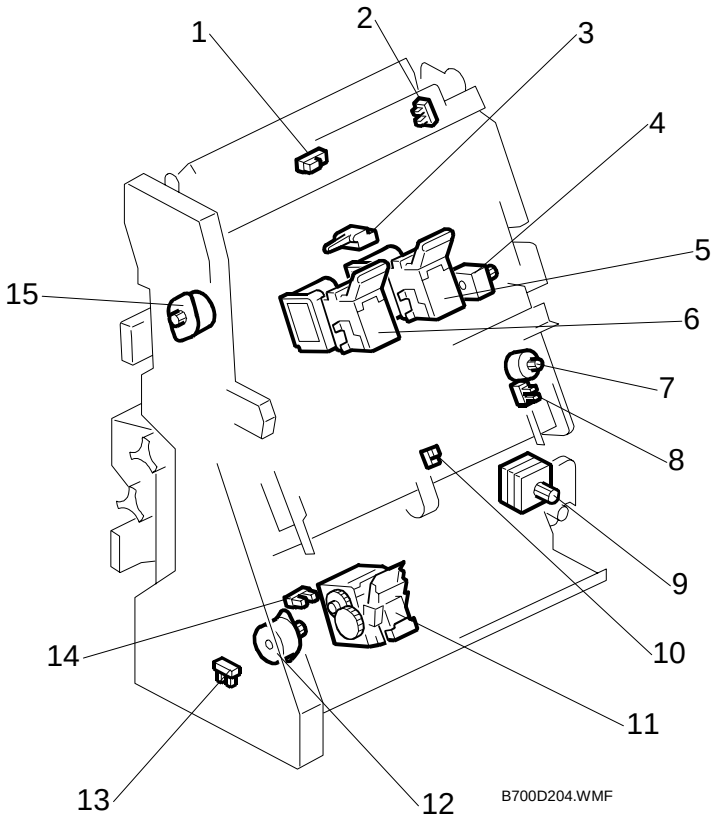

1. Stack Present Sensor (S32)*1
2. Stack Junction Gate HP Sensor (S27)*1
3. Stack Feed Out Belt HP Sensor (S16)
4. Feed Out Belt Motor (M5)
5. Booklet Stapler – Rear (M23)*1
6. Booklet Stapler – Front (M22)*1
7. Jogger Fence Motor (M15)
8. Jogger Fence HP Sensor (S15)
9. Corner Stapler Movement Motor (M6)
10. Stapling Tray Paper Sensor (S14)
11. Corner Stapler (M20)
12. Corner Stapler Rotation Motor (M13)
13. Corner Stapler HP Sensor (S17)
14. Stapler Rotation HP Sensor (S18)
15. Stack Junction Gate Motor (M17) *1

*1 **B700 Only**

Peripherals

Downloaded from www.Manualslib.com manuals search engine

2.2.5 B700 FOLD UNIT

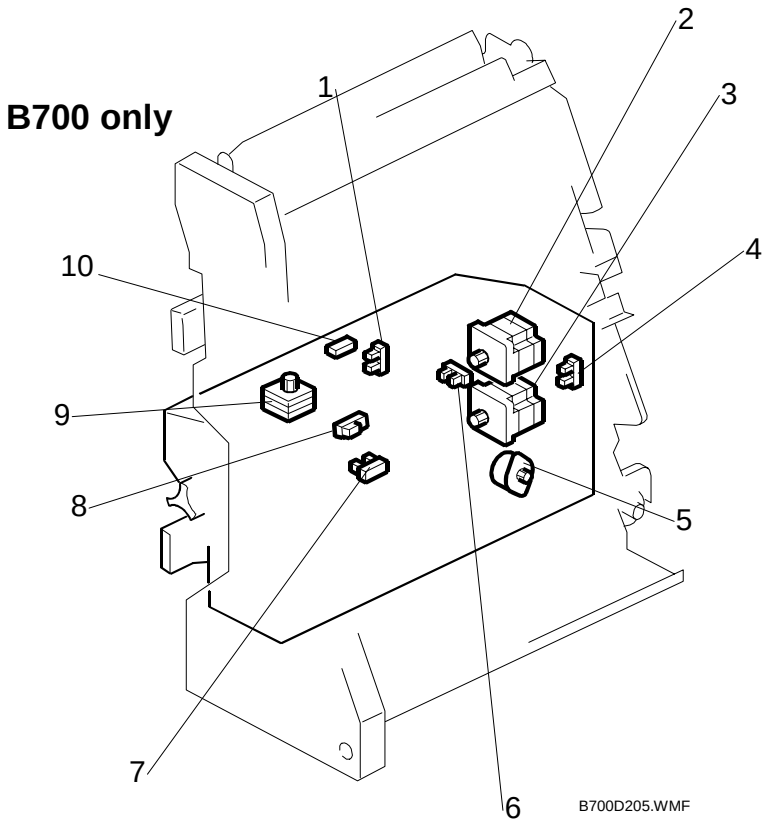

1. Clamp Roller HP Sensor (S25)
2. Fold Roller Motor (M12)
3. Fold Plate Motor (M11)
4. Fold Plate HP Sensor (S29)
5. Fold Unit Bottom Fence Lift Motor (M16)
6. Fold Cam HP Sensor (S30)
7. Fold Bottom Fence HP Sensor (S28)
8. Fold Unit Entrance Sensor (S26)
9. Clamp Roller Retraction Motor (M8)
10. Fold Unit Exit Sensor (S31)

Downloaded from www.Manualslib.com manuals search engine

2.2.6 SUMMARY OF ELECTRICAL COMPONENTS

Here is a general summary of all the electrical components of the B700/B701 finishers.

NOTE: In the table below a number that appears in bold text (**M8**, etc.) denotes a component that is on the 2000/3000 Sheet Finisher B700 only.

No.	Component	Function
Boards (PCB)		
PCB1	Main Board	The main board that controls the finisher
PCB2	Booklet Stapler Board	A separate board that controls booklet finishing.
PCB3	Punch Unit Board	The board that controls the punch unit.
Motors		
M1	Finisher Entrance Motor	Drives 1) the finisher entrance rollers, 2) and the punch waste transport belt of the punch unit.
M2	Upper Transport Motor	Drives the paper feed rollers that feed paper 1) to the proof tray, 2) straight-through to the upper tray, 3) the pre-stack tray entrance roller.
M3	Lower Transport Motor	Drives paper feed rollers forward and reverse in the pre-stack tray for the switchback, and drives the other rollers in the lower transport area.
M4	Upper/Proof Tray Exit Motor	Drives 1) proof tray exit rollers, 2) extension and retraction of the stacking sponge roller, 3) upper tray exit rollers.
M5	Feed Out Belt Motor	Drives the feed out belt that moves the stapled stacks out of the stapling tray after stapling.
M6	Corner Stapler Movement Motor	Moves the corner stapler horizontally on a steel rod to position the stapler at the stapling position at 1) the front, 2) the rear (straight stapling), 3) the rear (diagonal stapling), or 4) the front and rear for double stapling.
M7	Paper Position Sensor Slide Motor	Drives the movement of the paper position slide that holds the paper position sensor (S3) that detects the position of the paper.
M8	Clamp Roller Retraction Motor	Drives a large cam that alternately clamps and unclamps the clamp retraction roller, the idle roller of the clamp roller pair. When these rollers are clamped, they are part of the paper feed path and feed the stack toward the bottom fence of the fold unit. When the idle roller is retracted, the stacks falls a very short distance (3 mm) onto the fold unit bottom fence below. These rollers remain unclamped while the bottom fence positions the stack for folding and while the stack is folded by the fold rollers.
M9	Punch Movement Motor	Drives the front/back movement of the punch unit to position it correctly for stapling the paper below.
M10	Stacking Sponge Roller Motor	Rotates the stacking roller that drags each sheet back against the end fence to jog the bottom of each sheet after feed out to the upper tray.
M11	Fold Plate Motor	Drives the fold plate that pushes the center of the stack into the nip of the fold rollers to start the fold.
M12	Fold Roller Motor	Rotates forward and drives the fold rollers that fold the stack and feed it out of the fold unit, reverses to feed the fold once more into the fold unit, and then rotates forward again to feed the fold out of the fold unit.

Downloaded from www.Manualslib.com manuals search engine

No.	Component	Function
M13	Corner Stapler Rotation Motor	Swivels the corner stapler and positions it so the staple fires at an oblique angle at the rear corner of the paper stack.
M14	Positioning Roller Motor	Drives the positioning roller in the stapling tray.
M15	Jogger Fence Motor	Drives the jogger fences in the stapling tray to jog both sides of the stack before stapling.
M16	Fold Unit Bottom Fence Lift Motor	Raises the bottom fence and stops when the center of the vertical stack is opposite the edge of the horizontal fold blade. The distance for raising the blade is prescribed as one-half the size of the paper selected for the job. For large paper, (A3, B4) the bottom fence first lowers the stack 10 mm below the fold position, and then raises it to the fold position.
M17	Stack Junction Gate Motor	Drives the large cam that operates the stack junction gate at the top of the stapling tray. When this gate is open, it directs the ascending stack to the upper tray if it has been corner stapled, or if it is closed the gate turns the booklet stapled stack down so it falls onto the bottom fence of the fold unit.
M18	Shift Roller Motor	Drives the shift roller that operates in shift mode to stagger document sets as they feed out to the upper tray (making them easier to separate).
M19	Exit Guide Plate Motor	Drives the mechanism that raises and lowers the exit guide plate.
M20	Corner Stapler	This is the roving corner stapler, mounted on a steel rail that staples 1) at the front, 2) at the rear (straight staple), 3) at the rear (diagonal staple), and 4) font and rear (two staples).
M21	Upper Tray Lift Motor	Raises and lowers the upper tray during feed out to keep the tray at the optimum height until it is full.
M22	Booklet Stapler: Front	Booklet stapler. Staples paper stacks in the center before they are folded.
M23	Booklet Stapler: Rear	Booklet stapler. Staples paper stacks in the center before they are folded.
M24	Punch Drive Motor	Fires the punches that punch the holes in the paper.
Sensors		
S1	Finisher Entrance Sensor	Provides two functions: (1) Detects paper entering the finisher from the copier, and (2) Signals a jam if it detects paper at the entrance when the copier is switched on.
S2	Pre-stack Tray Exit Sensor	Detects 1) paper fed from the pre-stack tray to the stapling tray, and detects 2) paper in the pre-stack when the copier is switched on. (This sensor performs no timing function. The entire flow of paper through the pre-stacking mechanism is controlled by motor pulse counts.)
S3	Paper Position Sensor	The photosensor that detects the edge of the paper and sends this information to the punch unit board where it is used to position the punch for punching the holes in the paper.
S4	Punch Hopper Full Sensor	1) A photosensor that detects and signals that the punch hopper is filled with punch waste and needs emptying, and 2) confirms the presence of the punch hopper and signals an error if it is missing or not installed completely.
S5	Shift Roller HP Sensor	Located near the shift roller motor, controls the front-to-back movement of the shift roller as shifts paper during straight-through feed.
S6	Upper Tray Exit Sensor	A flat, photo sensor located inside the guide plate, detects the leading edge and trailing edge of the paper as it feeds out to the upper tray during straight-through jobs (with and without stapling). When paper is fed to the upper tray, at the

Downloaded from www.Manualslib.com manuals search engine

No.	Component	Function
		paper output slot this sensor signals an error when it detects (1) paper has failed to leave the paper exit (lag error), (2) detects paper has failed to arrive at the paper exit (late error), (3) detects paper is in the exit slot when the machine is turned on.
S7	Exit Guide Plate HP Sensor	Controls the vertical movement of the control exit guide . The guide plate is in the home position when the guide plate is down and the actuator interrupts the sensor gap.
S8	Upper Tray Paper Height Sensor (Staple Mode)	This is the upper sensor of the upper/lower paper height sensor pair that controls the lift of the upper tray. This sensor detects the paper height of the stack in the upper tray when the copier is operating in the staple mode.
S9	Upper Tray Paper Height Sensor (Non-Staple Mode)	This is the lower sensor of the upper/lower paper height sensor pair that controls the lift of the upper tray. When the machine is switched on, the upper tray rises until the actuator on the tray triggers this sensor to switch off the upper tray lift motor.
S10	Proof Tray Exit Sensor	This sensor detects and times the feeding of paper to the proof tray. It also detects whether paper is present at the proof tray exit when the copier is switched on.
S11	Proof Tray Full Sensor	The top of the stack in the proof tray increases until it nudges the feeler of this sensor. The sensor then signals that the proof tray is full and the job halts until some paper is removed from the proof tray.
S12	Upper Tray Limit Sensor	This sensor controls the position of the upper tray 1) during straight-through feed out, 2) during shift feed out, 3) when the machine is turned on. The machine obeys the signal of whichever sensor is actuated first. An actuator attached to an arm triggers this sensor. The tip of the same arm depresses the upper tray limit switch If the sensor fails, the tip of the arm will activate the upper tray limit microswitch (SW2) and stop the lift of the upper tray. **Note**: When the machine is turned on, the upper tray position is controlled by either this sensor or the upper tray paper height sensor (S9).
S13	Stacking Roller HP Sensor	Controls the forward and back motion of the stacking roller (a sponge roller) located at the output slot of the upper tray. The sponge roller drags each ejected sheet back against the end fence of the upper tray to keep the bottom of the stack aligned.
S14	Stapling Tray Paper Sensor	A photo sensor that detects whether paper is in the stapling tray. When this sensor detects paper, the bottom fence motor raises or lowers the bottom fence to position the selected paper size for booklet stapling.
S15	Jogger Fence HP Sensor	Detects the home position of the jogger fences. When the actuator on the jogger fence interrupts this sensor, the jogger fence is in its home position and the jogger fence motor (M15) stops.
S16	Stack Feed-Out Belt HP Sensor	Controls the position of the stack feed-out pawl on the stack feed-out belt. Once the actuator on the feed belt nudges the feeler of this sensor near the top of the stapler unit, the feed out belt motor (M5) remains on for the time prescribed to position the pawl at the home position to catch the next stack.
S17	Corner Stapler HP Sensor	Located at the front the stapling tray and mounted above the steel rod where the corner stapler travels, this sensor detects

Downloaded from www.Manualslib.com manuals search engine

No.	Component	Function
		the home position of the corner stapler. The corner stapler is in its home position when the actuator on the corner stapler unit interrupts this sensor.
S18	Stapler Rotation HP Sensor	Controls the angle of the position of the corner stapler during oblique stapling.
S19	Upper Tray Full Sensor (B700/B701)	**B700**: When the actuator on the side of the upper fence enters the gap of this sensor, the sensor signals that the upper tray is at its lowest position (full) and stops the job. **B701**: One of two upper tray full sensors. This is the higher tray full sensor for A3 and other heavy paper. The other upper tray full sensor (20) is for lighter paper.
S20	Upper Tray Full Sensor (B701 only)	**B700**: This sensor is not used on the booklet finisher. There is only one upper tray full sensor (S18). **B701**: One of two upper tray full sensors. This is the lower tray full sensor for A4 and smaller paper. The other upper tray full sensor (19) is for larger paper.
S21	Punch Unit HP Sensor	Switches off the punch movement motor when the punch unit returns to its home position. Pulse counts determine where the punch unit pauses for punching and reversing.
S22	Paper Position Side HP Sensor	Controls the movement of the paper position detection unit. Switches on when the horizontal detection unit is at the home position (HP is the reference point).
S23	Punch HP Sensor	Detects the home position of the punch unit and controls the vertical movement of the punches when they fire.
S24	Punch Encoder Sensor	When the punch mode is selected for the job (2-hole, 3-hole, etc.), the machine controls the operation of the punch drive (M24) motor which drives a small encoder shaped like a notched wheel. This wheel is rotated forward and reverse precisely to select which punches are moved up and down during the punch stroke.
S25	Clamp Roller HP Sensor	Controls the movement of the clamp retraction roller (the idle roller of the clamp roller pair).
S26	Fold Unit Entrance Sensor	Detects 1) the leading edge of the stack during booklet stapling, and 2) also used to signal an alarm if a paper is detected at the entrance of the fold unit when the copier is turned on.
S27	Stack Junction Gate HP Sensor	Controls the opening and closing of the stack junction gate. Switches on when the stack junction gate is open and at the home position.
S28	Fold Bottom Fence HP Sensor	Controls the movement of the bottom fence in the fold unit using pulse counts based on the size of the paper selected for the job to position the stack correctly for feeding.
S29	Fold Plate HP Sensor	Along with the fold plate cam HP sensor (S30) this sensor controls the movement of the fold plate. The fold plate has arrived at the home position when the edge of the plate enters the gap of this sensor.
S30	Fold Plate Cam HP Sensor	Along with the fold plate HP sensor (S29), this sensor controls the movement of the fold plate. The actuator mounted on the end of the roller that drives the folder plate forward and back makes three full rotations, i.e. the actuator passes the sensor gap twice and stops on the 3rd rotation and reverses. This accounts for the left and right movement of fold plate.
S31	Fold Unit Exit Sensor	1) Detects the folded edge of the stack as it feeds out from the nip of the fold rollers, stops the rollers, and reverses them so the fold feeds back into the nip, 2) when the folded booklet

Downloaded from www.Manualslib.com manuals search engine

No.	Component	Function
		finally emerges from the nip of the fold rollers, detects the leading and trailing edge of the booklet to make sure that it feeds out correctly.
S32	Stack Present Sensor	This sensor determines whether a there is paper at the turn junction gate when the machine is turned on. If a stack is present, this triggers a jam alert. (This sensor performs no dynamic function such as pulse counting, etc. It only detects whether paper is at the top of the fold unit when power its turned on.)
S33	Lower Tray Full Sensor - Rear	This rear sensor is the lower sensor of the lower tray full sensor pair. Two actuators are attached to the actuator arm that touches the top of stapled and folded booklets as they feed out. The on/off combinations of the two sensors are used to detect when the tray is full and stop the job. (The lower tray is stationary. At tray full, the job halts until booklets are removed from the lower tray.)
S34	Lower Tray Full Sensor - Front	This front sensor is the higher sensor of the lower tray full sensor pair. Two actuators are attached to the actuator arm that touches the top of stapled and folded booklets as they feed out. The on/off combinations of the two sensors are used to detect when the tray is full and stop the job. (The lower tray is stationary. At tray full, the job halts until booklets are removed from the lower tray.)
Solenoids		
SOL1	Proof Junction Gate Solenoid	Opens and closes the proof tray junction gate. When the solenoid switches on, it opens the gate and paper is diverted to the proof tray. When this gate is closed, the paper goes straight to the upper tray. I
SOL2	Stapling Tray Junction Gate Solenoid	Directs paper to the stapling tray. When this solenoid is on, paper feeds straight through. When this solenoid is off, paper feeds to the stapler tray below.
SOL3	Positioning Roller Solenoid	Engages the stapler transport motor and the positioning roller of the stapling tray. The positioning roller pushes each sheet down against the bottom fence to align the bottom the stack for stapling. (The jogger fences align the sides.)
SOL4	Stapling Edge Pressure Plate Solenoid	Operates the pressure plate of the stapler unit. The pressure plate presses down the edge of stack in the stapling tray so it is tight for stapling.
SOL5	Booklet Pressure Roller Solenoid	When the paper stack in the stapling tray feeds to the fold unit, this solenoid turns on and operates the roller that pushes on the surface of the stack to flatten it.
Switches		
SW1	Front Door Safety Switch	The safety switch that cuts the dc power when the front door is opened.
SW2	Upper Tray Limit SW	A micro-switch that cuts the power to the upper tray lift motor when the upper tray reaches its upper limit. This switch duplicates the function of the upper tray limit sensor (S12) and stops the upper tray if S12 fails.

Downloaded from www.Manualslib.com manuals search engine

2.3 DRIVE LAYOUT

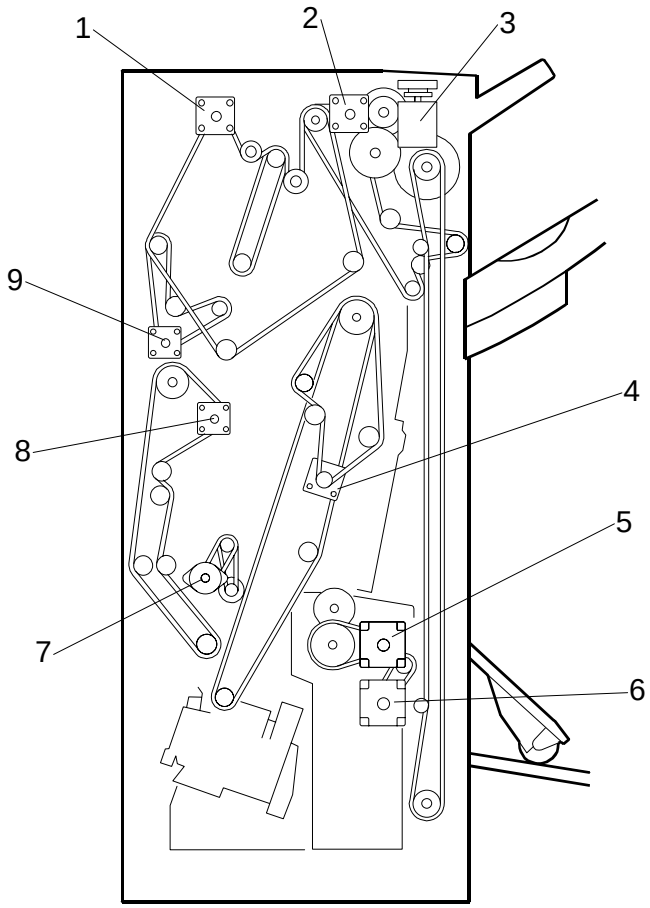

B700D206.WMF

1. Upper Transport Motor (M2)
2. Upper/Proof Exit Motor (M4)
3. Upper Tray Lift Motor (M21)
4. Feed-Out Belt Motor (M5)
5. Fold Roller Motor*1 (M12)
6. Folder Plate Motor*1 (M11)
7. Positioning Roller Motor (M14)
8. Lower Transport Motor (M3)
9. Entrance Motor (M1)

*1 B700 Only

Downloaded from www.Manualslib.com manuals search engine

2.4 JUNCTION GATES

The positions of the proof tray and staple tray junction gates determine the direction of paper feed after paper enters the finisher.

Proof Mode

[A]: Proof tray junction gate opens.
[B]: Staple tray junction gate remains closed.

The proof tray junction gate directs paper to the proof tray above.

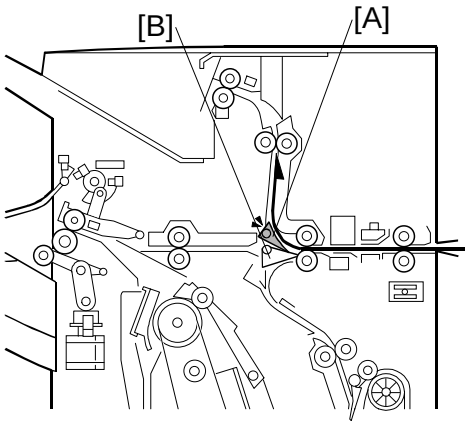

B700D301.WMF

Shift Mode

[A]: Proof tray junction gate remains closed.
[B]: Staple tray junction gate remains closed.

With both junction gates closed, the paper goes to the upper tray.

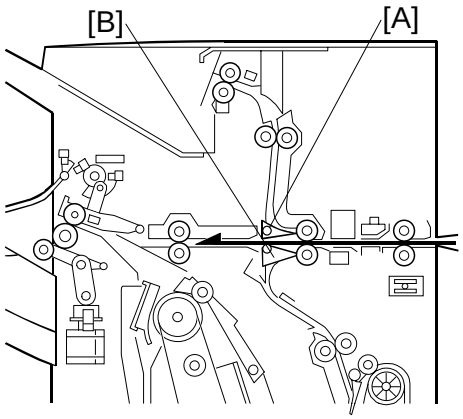

B700D302.WMF

Staple Mode

[A]: Proof tray junction gate remains closed.
[B]: Staple tray junction gate opens

The staple tray junction gate directs the paper to the staple tray below for jogging and stapling.

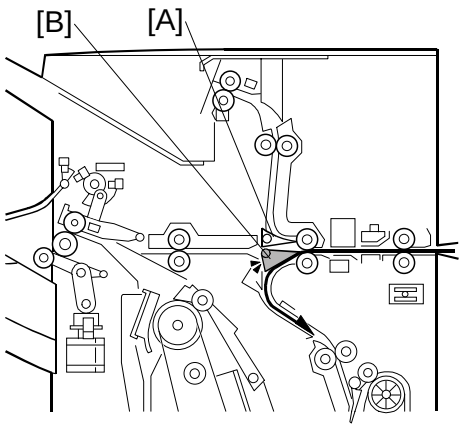

B700D303.WMF

Peripherals

Downloaded from www.Manualslib.com manuals search engine

2.5 PRE-STACKING

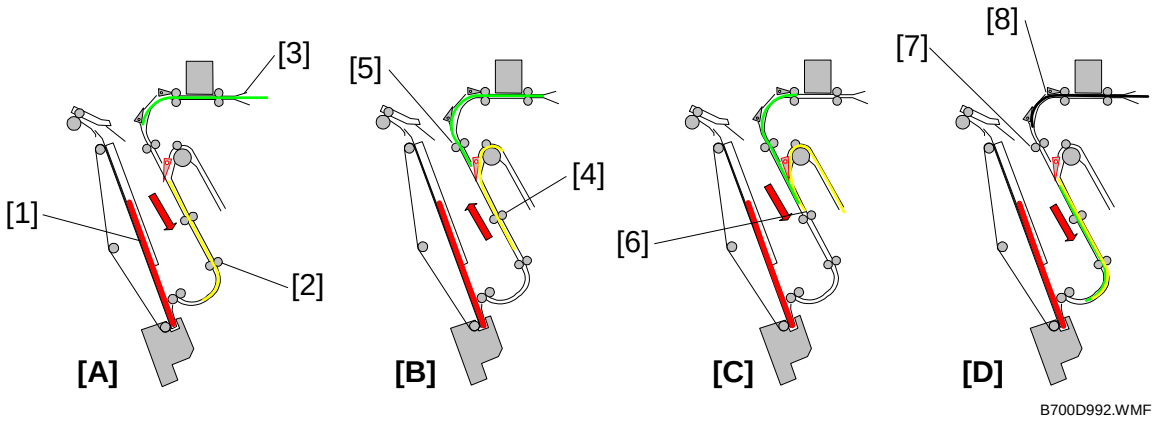

This example describes what happens to Set 2 during the feed and stapling cycle of sets that contain three pages.

[A]: While the Set 1 is being stapled in the staple tray [1], the 1st sheet of Set 2 [2] feeds to the pre-stack tray, and the 2nd sheet of Set 2 [3] enters the finisher.

[B]: The pre-stack junction gate opens and the 1st sheet of Set 2 [4] switches back to the top of the pre-stack tray as the 2nd sheet of Set 2 [5] starts to descend.

[C]: As the 2nd sheet of Set 2 continues to descend, the 1st sheet of Set 2 is fed from the pre-stack tray. At this time the leading edges [6] of both sheets are even.

[D]: The trailing edges of the 1st and 2nd sheets of Set 2 pass the junction gate [7] as the 3rd sheet of Set 2 [8] enters the finisher.

Downloaded from www.Manualslib.com manuals search engine

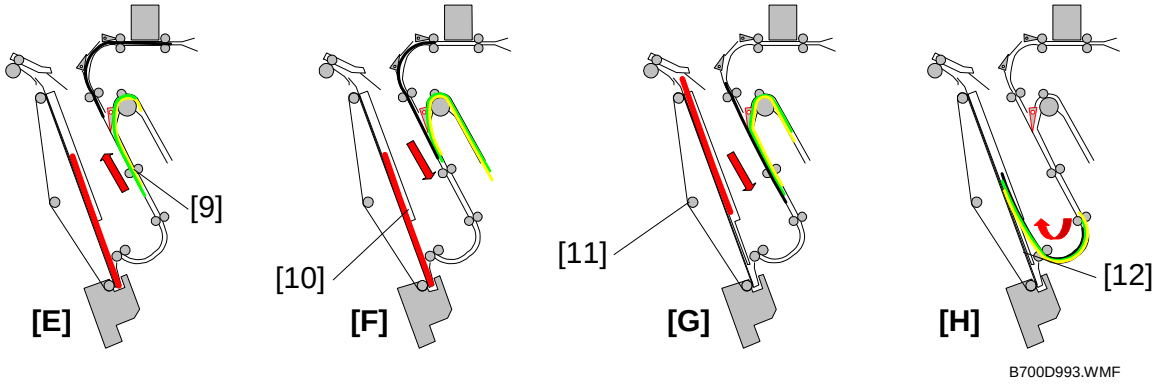

[E]: The 1st and 2nd sheets of Set 2 [9] switch back together into the top of the pre-stack and wait for the 3rd of Set 2 sheet to arrive.
[F]: The stapling of Set 1 in the staple tray [10] is completed.
[G]: Set 1 [11] exits the staple tray.
[H]: The three sheets of Set 2 [12] feed together into the stapler tray for stapling.

Pre-stacking is only done for A4, B5, and LT paper.

In one-staple mode, one sheet goes to the pre-stacking tray. Then two sheets go to the stapler tray at the same time.

In two-staple mode and booklet mode, three sheets go to the pre-stacking tray. Then four sheets go to the stapler tray at the same time.

Downloaded from www.Manualslib.com manuals search engine

2.6 UPPER TRAY

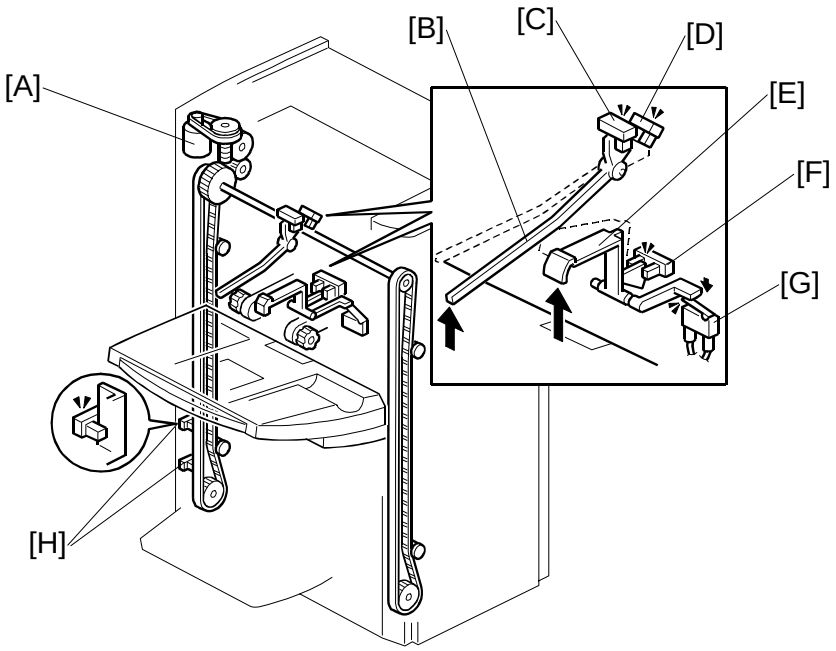

B700D108.WMF

[A]: Upper Tray Lift Motor
[B]: Upper Feeler
[C]: Upper Tray Paper Height Sensor 1 (Staple Mode)
[D]: Upper Tray Paper Height Sensor 2 (Non-Staple Mode)
[E]: Lower Feeler
[F]: Upper Tray Limit Sensor
[G]: Upper Tray Limit Switch
[H]: Upper Tray Full Sensors

Important

- The B700 (shown above) has only one upper tray full sensor (the higher sensor at [H])
- The B701 has two upper tray full sensors (the upper and lower sensor at [H]). On the B701 the upper sensor detects tray full for heavier paper (A3, DLT, B4, LG, 12 x 18”), and the lower sensor detects tray full for lighter paper (A4, LT, etc.).
- The tray full capacity is 2,000 sheets (B700) for A4, LT and 3,000 sheets (B701) for A4, LT.

Downloaded from www.Manualslib.com manuals search engine

Five sensors and one switch control the operation of the upper tray lift motor [A].

Upper Tray Raising and Lowering

Operation Mode	Sensors, Switch				Action
	[C]	[D]	[F]	[G]	
Standby (Non-Staple Mode)	OFF	OFF			Stops the lift motor is at the standby position when the actuator of the upper feeler deactivates sensor [C] (when it is between sensors [C] and [D]). **Note**: Sensor [F] and switch [G] are used as backup if sensor [C] fails or if the upper tray is not attached.
Straight Through			ON		**Non-staple mode operation:** During operation, tray lift is controlled only by sensor [F]. When the actuator leaves sensor [F], the tray lowers until the actuator reactivates sensor [F].
Shift			ON		
Standby (Staple Mode)	ON				**Standby**: The upper tray stops and waits for the paper output when the actuator activates sensor [C]. [D] is not used for staple mode **Staple Mode Operation**: • The upper tray lowers the prescribed distance immediately after the stack exits. • The upper tray rises until the actuator activates sensor [C] and stops the tray lift motor (and the tray) to wait for the next set. • Sensor [F] and switch [G] are used as backup if sensor [C] fails.

Tray Full

B700	When the actuator on the tray activates the upper tray full sensor [H] the tray lift motor [A] switches off. Operation resumes after some copies are removed from the tray. Upper Tray Capacity: 2,000 sheets (A4, LT)
B701	The operation of the upper tray full sensor is the same as the B700. Capacity: 1,500 sheets for A3, B4 or other large paper. An additional upper tray full sensor (below sensor [H]) allows more sheets to stack on the upper tray. Capacity: 3,000 sheets (A4, LT)

Downloaded from www.Manualslib.com manuals search engine

2.7 LOWER TRAY (B700 ONLY)

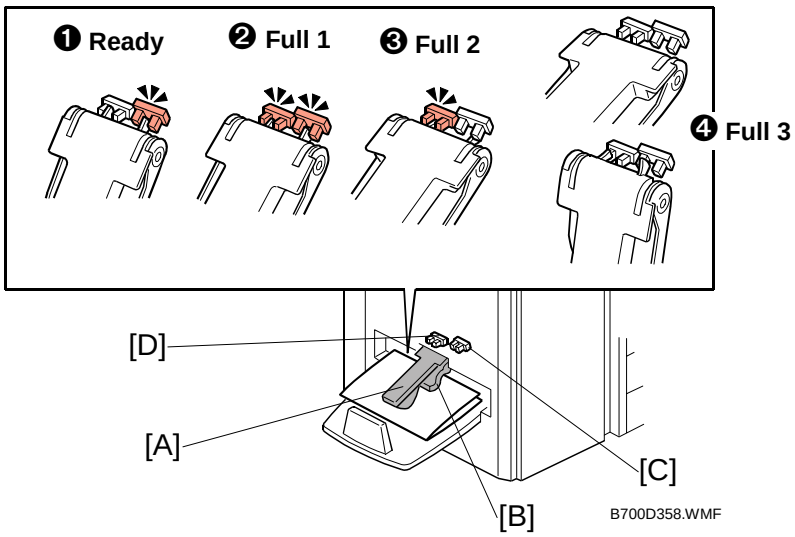

The lower tray sensor actuator arm [A] rests on the top of the stack of stapled booklets as they are output to the lower tray. A flap depressor [B] keeps the open ends of the booklets down.

The front lower tray full sensor (S34) [C] and rear lower tray full sensor (S33) [D] detect when the lower tray is full of booklets.

Important

- The front lower tray full sensor is mounted higher than the rear lower tray full sensor.
- The lower tray is stationary. When it becomes full, the stapling and folding job stops until booklets are removed from the tray.
- If the lower tray is not installed (this is detected if the front and rear sensors remain OFF), the machine will not operate in the booklet staple and fold mode. When booklet mode is selected, the tray full message appears on the operation panel.

The combinations of the two actuators and two sensors as the actuator arm rises determines the number of booklets that the lower tray can hold before the job stops.

Downloaded from www.Manualslib.com manuals search engine

The tray full detection depends on the size of the paper and the number of sheets in one stapled and folded booklet.

In the table below, the conditions (❶ Ready ❷ Full 1, ❸ Full 2 ❹ Full 3: See the illustration on the previous page) refer to the states of the sensors described on the previous page.

Condition	Front Sensor	Rear Sensor
Ready	ON	OFF
Full 1	ON	ON
Full 2	OFF	ON
Full 3 (or lower tray not installed)	OFF	OFF

In the tables below:

- "Sht" denotes "sheets in a stack".
- "Cnt" denotes "Count" (see below for an explanation).

After a booklet is feed out, the fold roller motor stops the exit roller. The machine then monitors the tray full sensors every 100 ms. The machine checks for a certain condition, based on the size of the paper and the number of sheets in the booklet.

An example is shown below. Tell the operators that the number of sheets that the lower tray can hold will vary greatly.

Lower Tray Full Condition Table

A3 (DLT)

	1 Sht	2 Sht	3 Sht	4 Sht	5 Sht	6 Sht	7 Sth	8 Sht	9 Sht	…
Full 1	3 Cnt	—	—	—	—	—	—	—	—	…
Full 2	—	5 Cnt	15 Cnt	—	—	—	—	—	—	…
Full 3	—	—	—	7 Cnt	13 Cnt	4 Cnt	2 Cnt	2 Cnt	2 Cnt	…

A4 (LT)

	1 Sht	2 Sht	3 Sht	4 Sht	5 Sht	6 Sht	7 Sth	8 Sht	9 Sht	…
Full1	16 Cnt	—	—	—	—	—	—	—	—	…
Full 2	—	10 Cnt	10 Cnt	15 Cnt	20 Cnt	15 Cnt	10 Cnt	8 Cnt	8 Cnt	…
Full 3	—	—	—							…

Examples

After the copier makes a booklet with 1 sheet of A3/DLT paper, the machine checks every 100 ms for the ‘Full 1’ condition. If the Full 1 condition occurs 3 times (shaded block in the table above), the machine detects that the tray is full.

After the copier makes a booklet with 5 sheets of A4/LT paper, the machine checks every 100 ms for the ‘Full 2’ condition. If the Full 2 condition occurs 20 times (shaded block in the table above), the machine detects that the tray is full.

Downloaded from www.Manualslib.com manuals search engine

2.8 CORNER STAPLING

2.8.1 STACKING AND JOGGING

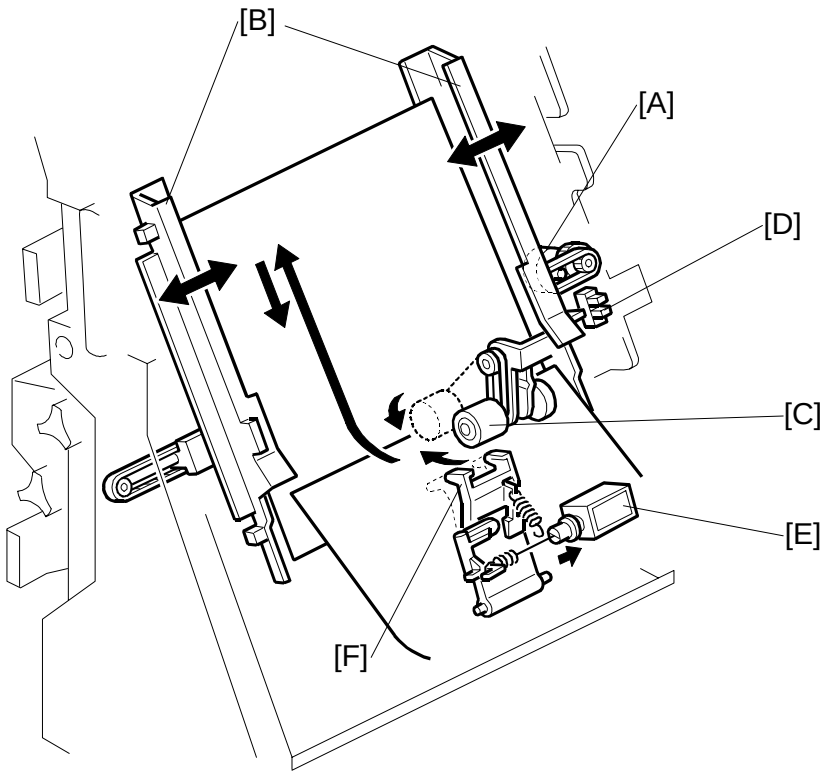

B700D102.WMF

[A]: Jogger Fence Motor (M15)
[B]: Jogger Fences
[C]: Positioning Roller
[D]: Jogger Fence HP Sensor (S15)
[E]: Stapling Edge Pressure Plate Solenoid (SOL4)
[F]: Pressure Plate

Downloaded from www.Manualslib.com manuals search engine

At the beginning of the job, the jogger fence motor (M15) [A] switches on and moves the jogger fences [B] to the standby position (7.5 mm from the sides of the selected paper size).

When each sheet passes the pre-stack tray exit sensor (S2) and enters the stapling tray:

- The jogger fence motor switches on and moves the jogger fences to within 5.5 mm of the sides of the selected paper size.
- The positioning roller solenoid (SOL3) switches on for the time prescribed for the paper size. This pushes the positioning roller [C] onto the sheet and pushes it down onto bottom fence. This aligns the edge of the stack.

Next, the jogger fence motor:

- Switches on again and moves the jogger fences to within 2.6 mm of the sides of the stack to align the sides of the stack.
- Reverses and moves the fences to the standby position (7.5 mm away for the sides) and waits for the next sheet.
- The jogger fence HP sensor [D] switches off the jogger motor at the end of the job.

After the last sheet feeds:

- The stapling edge pressure plate solenoid [E] (SOL4) switches on and pushes the pressure plate [F] onto the stack to press down the edge for stapling.
- The corner stapler staples the stack.

Downloaded from www.Manualslib.com manuals search engine

2.8.2 STAPLER MOVEMENT

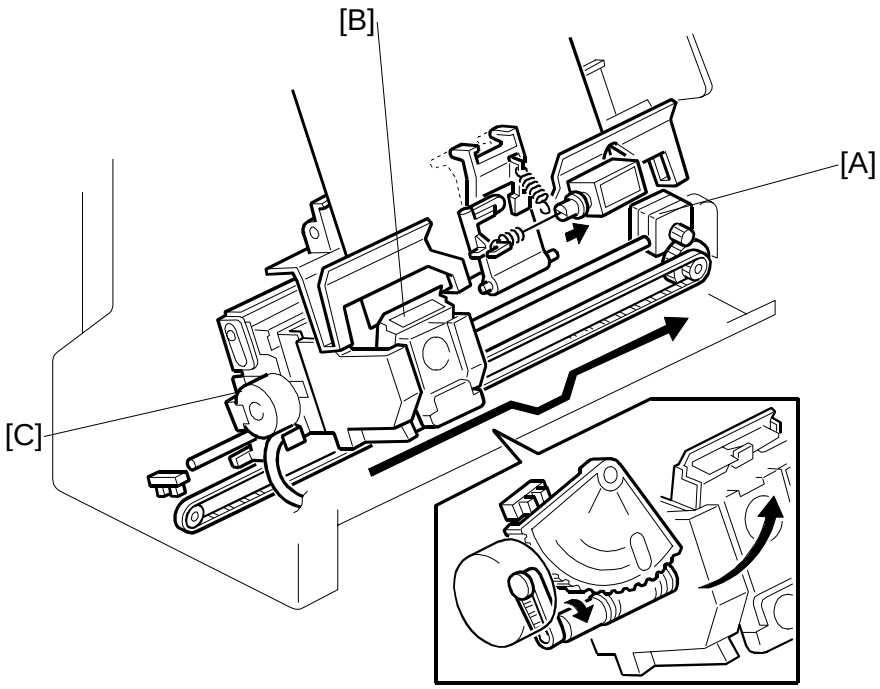

B700D103.WMF

[A]: Stapler Movement Motor
[B]: Stapler
[C]: Stapler Rotation Motor

Downloaded from www.Manualslib.com manuals search engine

The stapler performs horizontal and rotational movement in each of the four staple modes:

- Front 1 staple
- Rear 1 staple
- Rear diagonal staple
- Rear/Front 2 staples.

The stapler movement motor [A] drives a timing belt that moves stapler [B] left and right on its stainless steel rail.

The stapler rotation motor [C] rotates the stapler into position for diagonal stapling at the rear.

- The stapler movement motor switches on and moves the stapler the standby stapling position. (This is the stapling position for the paper size selected for the job.)
- The stapler movement motor switches off and the stapler waits for the signal to fire (or swivel and for diagonal stapling).

If the stack is to be stapled at two positions:

- The stapler movement motor moves the stapler to the front position and staples the front.
- The stapler movement motor moves the stapler to the rear and the stapler staples the rear.

If the stack will be stapled at the rear with a diagonal staple, the staple moves to the rear. When it is time for stapling, the rotation motor rotates the stapler to the correct angle and holds the stapler in that position while the stapler fires.

The stapling positions can be fine adjusted with **SP6109**.

Downloaded from www.Manualslib.com manuals search engine

2.8.3 CORNER STAPLING

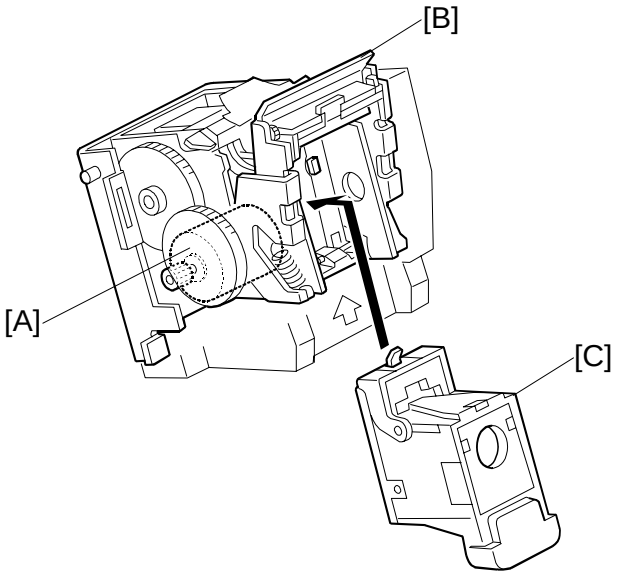

B468D015.WMF

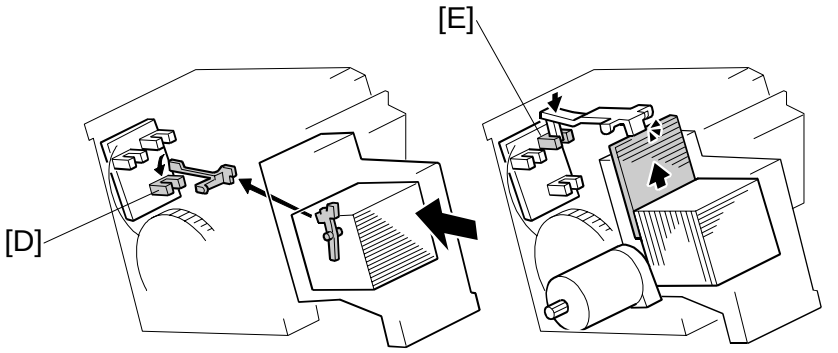

B700D304.WMF

Staple firing is driven by the stapler motor [A] inside the stapler unit. The stapler hammer [B] fires the stapler [C].

The cartridge set sensor [D] detects the cartridge at the correct position.

The staple end sensor [E] detects the staple end condition.

Downloaded from www.Manualslib.com manuals search engine

2.9 BOOKLET STAPLING (B700 ONLY)

2.9.1 BOOKLET PRESSURE MECHANISM

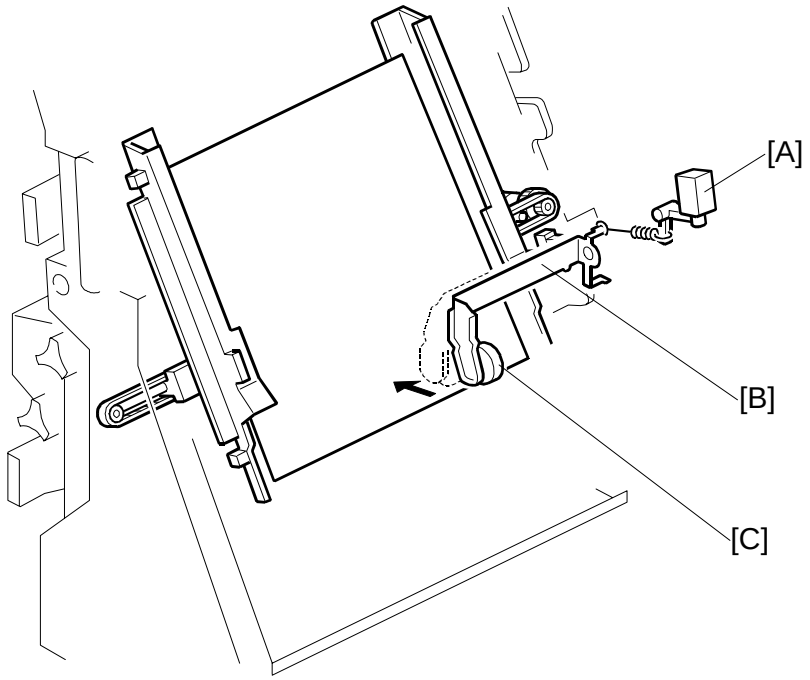

[A]: Booklet Pressure Roller Solenoid (SOL5)
[B]: Booklet Pressure Roller Arm
[C]: Booklet Pressure Roller

As soon as the edges are aligned by the positioning roller and the jogger fences, the stack feed out belt moves.

In booklet mode, immediately after the edges are aligned by the positioning roller and jogger fences, the booklet pressure solenoid switches on and the booklet pressure roller presses down on the stack until booklet stapling is finished. This prevents the stack from shifting during stapling.

Downloaded from www.Manualslib.com manuals search engine

2.9.2 BOOKLET STAPLING AND FOLDING

Overview

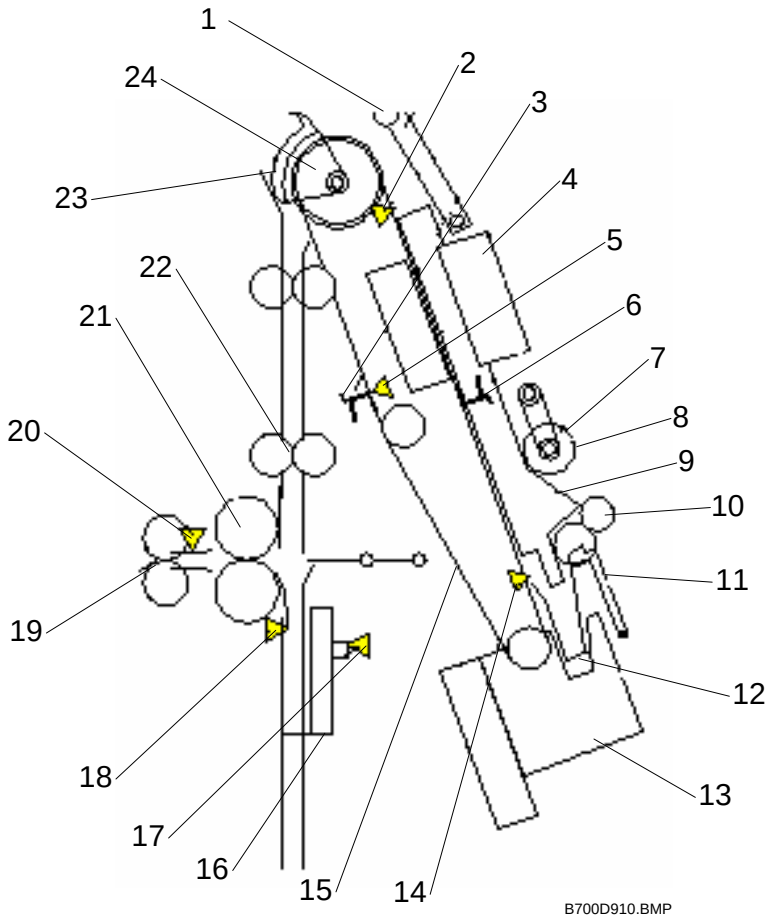

1. Leading Edge Pressure Roller
2. Stack Present Sensor (S32)
3. Feed Out Belt Pawl 1
4. Booklet Staplers x2 (M22, M23)
5. Stack Feed Out Belt HP Sensor (S16)
6. Feed Out Belt Pawl 2
7. Positioning Roller
8. Booklet Pressure Roller (Rear)
9. Jogger Fences x2
10. Pre-Stack Exit Roller
11. Pressure Plate
12. Stapling Tray Bottom Fence
13. Corner Stapler (M20)
14. Stapling Tray Paper Sensor (S14)
15. Feed Out Belt
16. Fold Unit Bottom Fence
17. Fold Bottom Fence HP Sensor (S28)
18. Fold Unit Entrance Sensor (S26)
19. Fold Unit Exit Rollers x2
20. Fold Unit Exit Sensor (S31)
21. Fold Rollers x2
22. Clamp Rollers x2
23. Stack Junction Gate
24. Stack Transport Roller

Downloaded from www.Manualslib.com manuals search engine

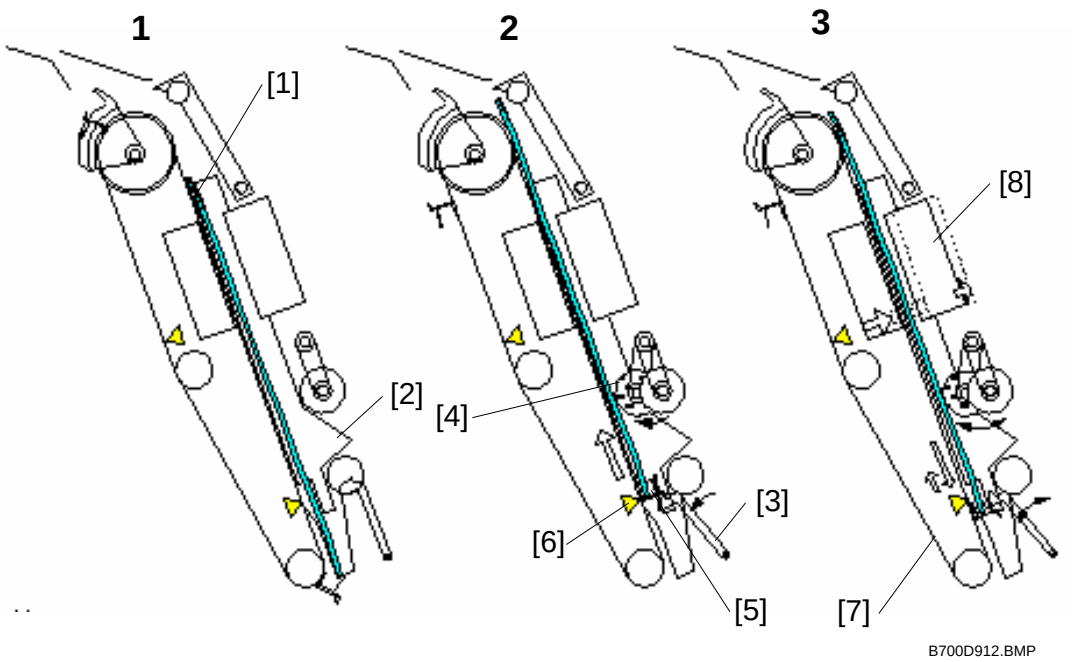

1

The last sheet of the stack [1] enters the stapling tray. The jogger fences [2] jog the last sheet into position (based on the width of the selected paper size) and then retract and stop 1 mm away from the sides of the stack.

2

The pressure plate [3] and booklet pressure roller [4] press down on the sheet. The stack feed out belt switches on and the pawl [5] on the feed out belt catches the bottom of the stack and raises it. The stapling tray sensor [6] detects the trailing edge of the paper stack.

3

The feed out belt [7] raises the stack to the prescribed stapling position and stops. The jogger fences move to the sides of the stack and the booklet staplers [8] staple the stack.

Downloaded from www.Manualslib.com manuals search engine

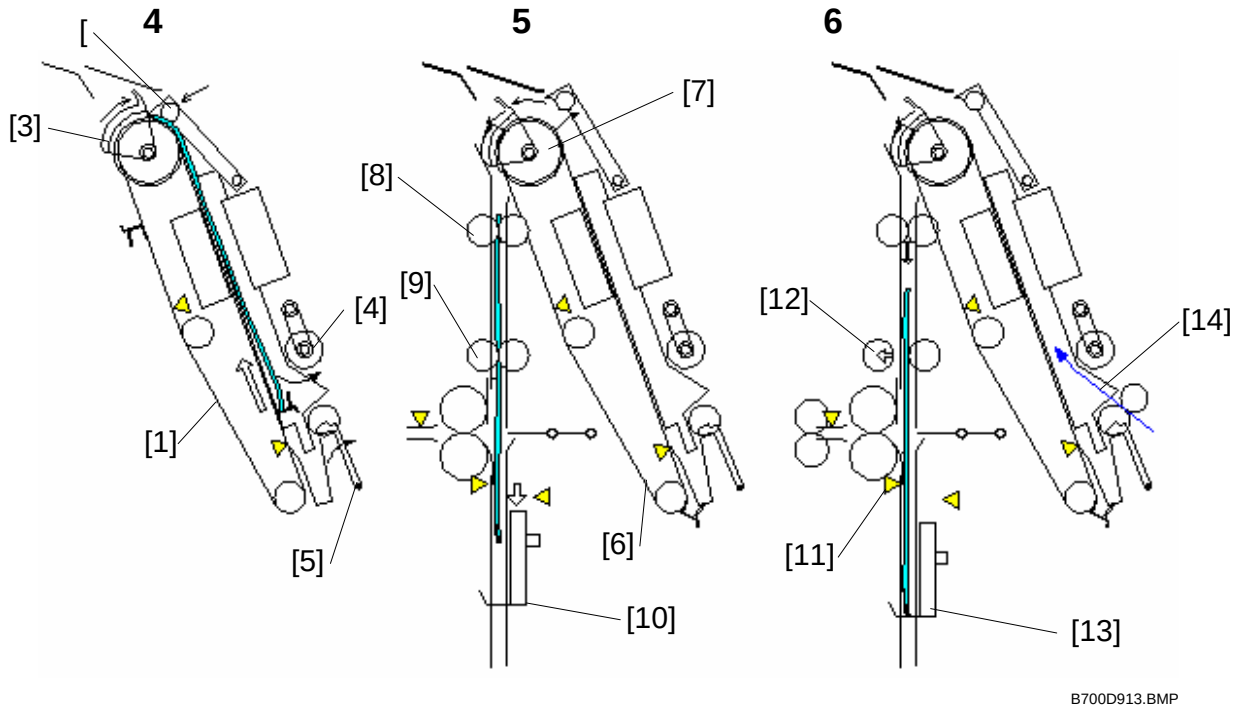

4

The jogger fences remain 1 mm away from the sides of the stack. The feed out belt [1] raises the stack until the top of the stack is 10 mm past the leading edge pressure roller [2] and stops. The leading edge pressure roller descends and applies pressure to the top of the stack. The stack junction gate [3] (normally open) closes. The pressure roller [4] and pressure plate [5] retract.

5

The feed out belt [6], transport rollers [7], [8], and clamp rollers [9] rotate and feed the stack past the closed stack junction, over the top and down toward the bottom fence [10]. At the same time, the fold unit bottom fence descends from its home position and stops 10 mm below the fold position.

6

The rollers feed the leading edge of the stack to within 3 mm of the stack stopper of the bottom fence [13]. The fold unit entrance sensor [11] detects the stack and opens the clamp rollers [12]. The stack drops 3 mm onto the fold unit bottom fence [13]. At this time, the first sheet [14] of the next stack feeds to the stapling tray.

Downloaded from www.Manualslib.com manuals search engine

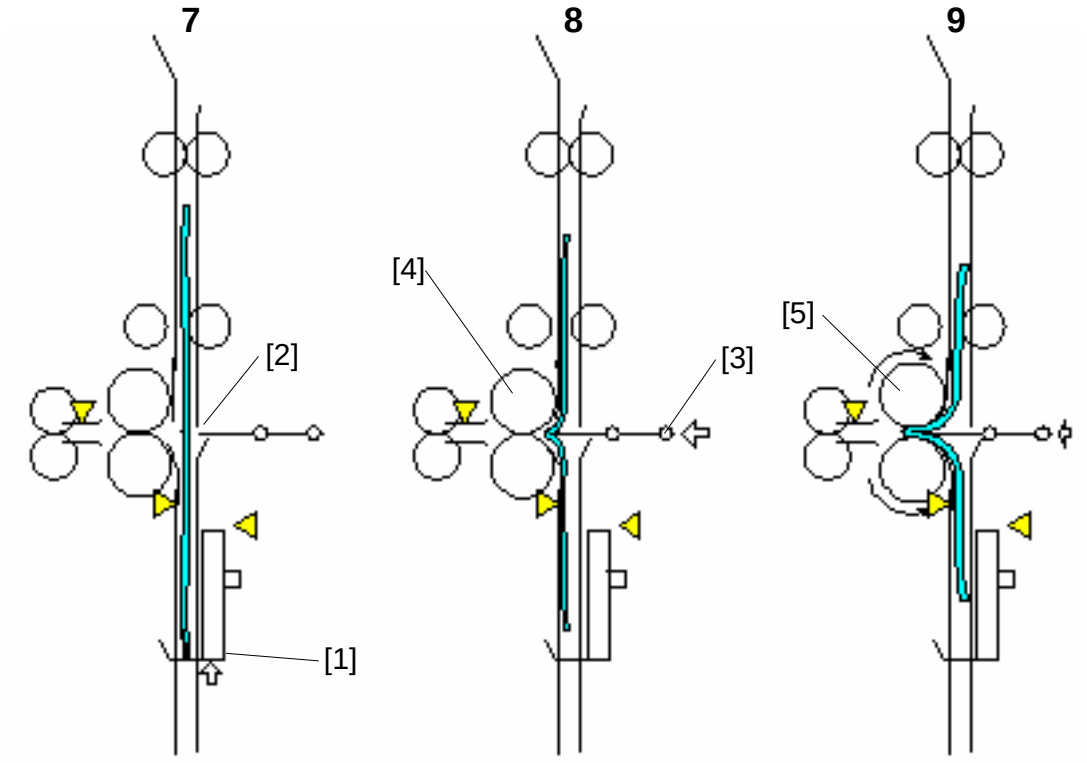

B700D914.BMP

7

The bottom fence [1] raises the stack to the prescribed fold position [2].

8

The fold plate [3] moves to the left and advances 1/3 its maximum horizontal stroke and exerts 20 kg (44 lb.) of pressure at the fold rollers [4].

9

With the fold plate pushing the stack into nip of the fold rollers [5], the fold rollers begin to rotate and fold the stack as it feeds out.

Downloaded from www.Manualslib.com manuals search engine

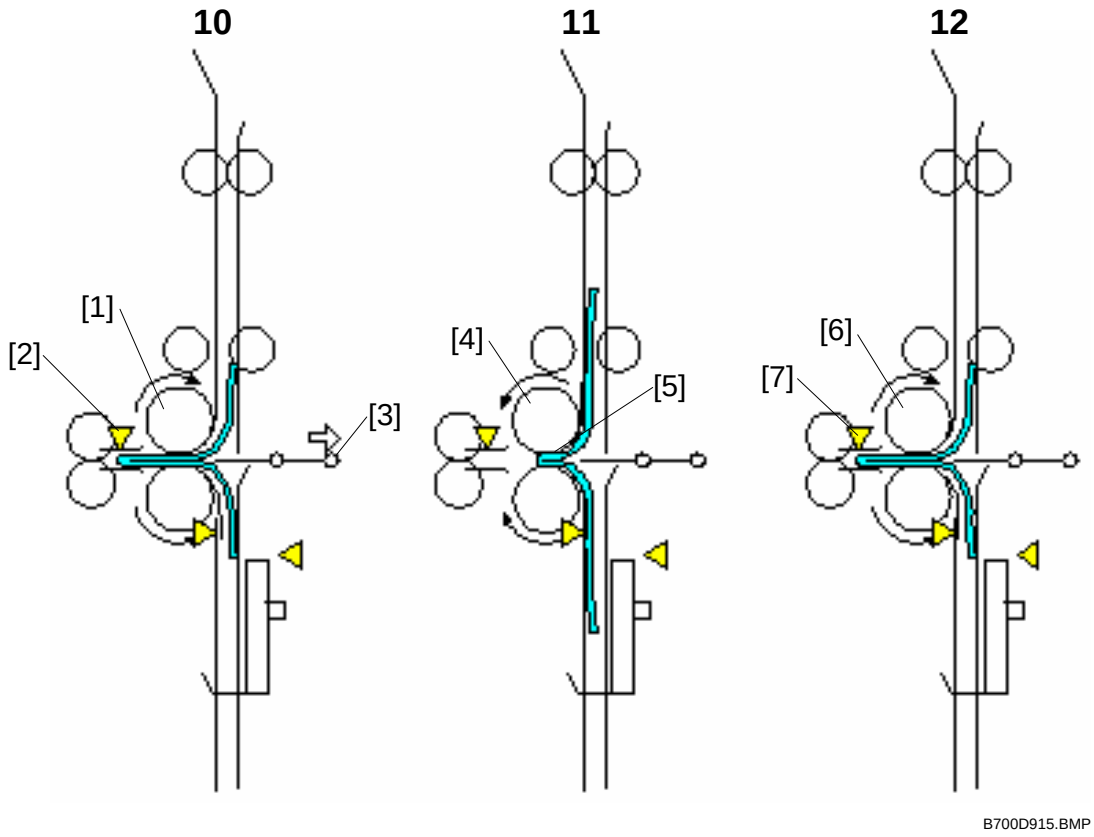

10

When the fold rollers [1] feed the stack 10 mm past the nip, the fold plate retracts until it no longer touches the stack. The fold unit exit sensor [2] detects the folded edge of the stack and stops the fold rollers.

11

The rotation of the fold rollers [4] reverses and feeds the folded edge back until only 3 mm of the fold [5] remains at the nip.

12

The fold rollers [6] rotate forward once again feed out. The fold unit exit sensor [7] once again detects the edge of the fold.

NOTE: You can do **SP6114** to increase the sharpness of the fold. The number of forward and reverse feeds can be set in the range of 2 to 30. The machine repeats Steps **11** and **12.** For more, please refer to Section "5 Service Tables.

Downloaded from www.Manualslib.com manuals search engine

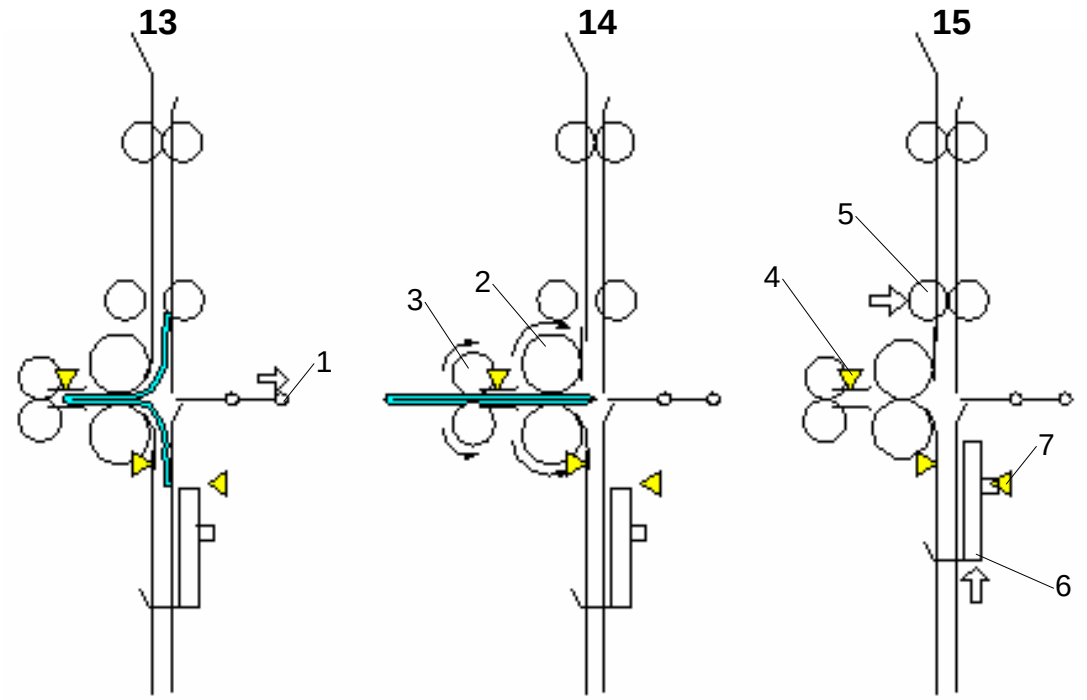

B700D916.BMP

13

With the feed of the stack halted, the fold plate [1] retracts. The fold plate HP sensor (not shown) detects the fold plate and stops it at its home position.

14

The fold rollers [2] and fold unit exit rollers [3] begin to rotate together and feed out the folded booklet to the lower tray.

15

Once the trailing edge of the stack passes the fold unit exit sensor [4], the clamp rollers [5] close to be ready to feed the next stack. The fold unit bottom fence [6] descends. The bottom fence HP sensor [7] stops the bottom fence when it detects the actuator on the bottom fence.

Downloaded from www.Manualslib.com manuals search engine

Booklet Stapling and Folding Mechanisms

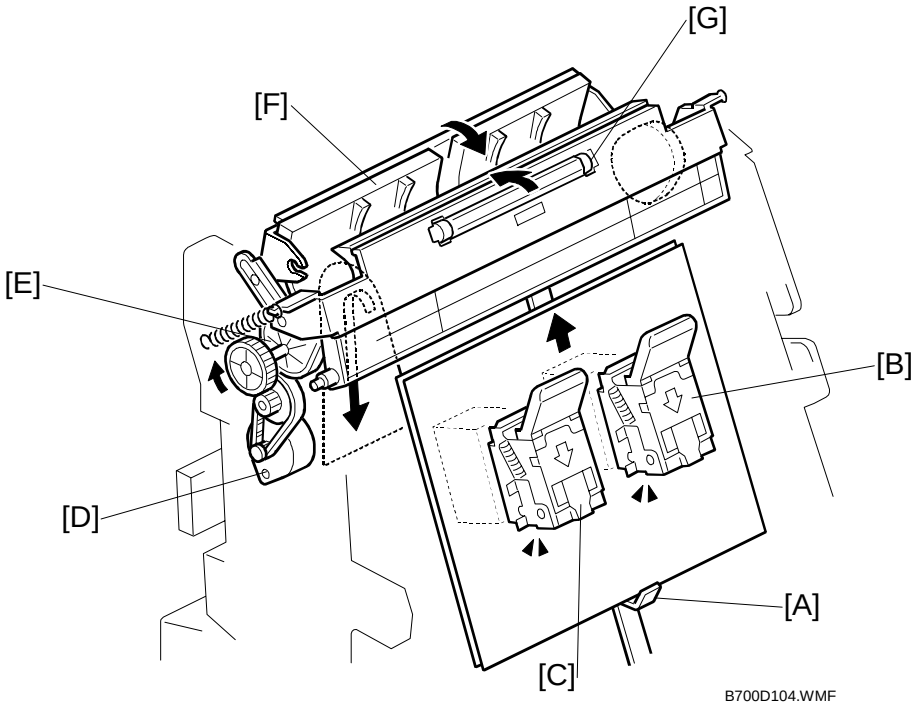

Booklet Stapler

[A]: Feed Out Belt Pawl. Raises the stack to stapling position.
[B]: Booklet Stapler – Rear
[C]: Booklet Stapler – Front

Stack Junction Gate

[D]: Stack Junction Gate Motor. Drives a timing belt and stack junction gate cam.
[E]: Stack Junction Gate Cam. Opens and closes the stack junction gate.
[F]: Stack Junction Gate. The stack junction gate motor and stack junction gate cam close the stack junction gate. The feed out belt pawl raises the stapled stack and sends it over the top and down to the fold unit.
[G]: Leading Edge Pressure Roller. Presses down on the leading edge of the stack after booklet stapling.

Downloaded from www.Manualslib.com manuals search engine

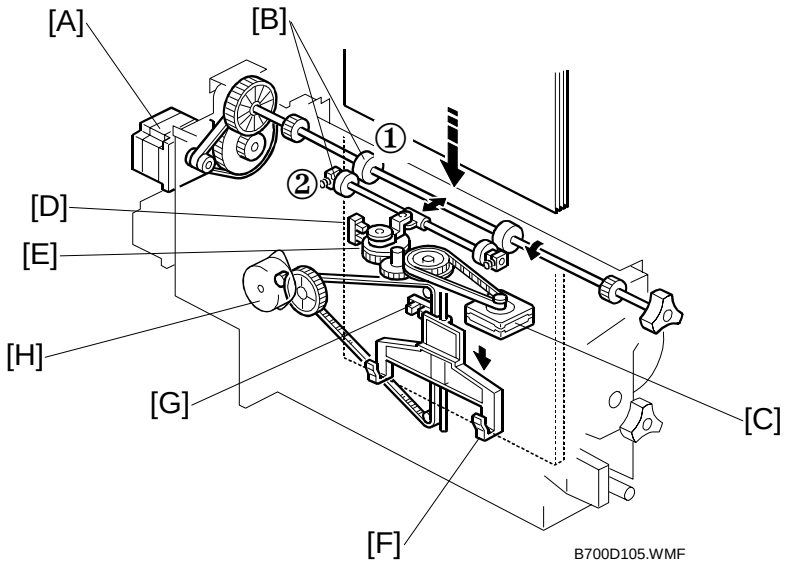

Clamp Roller

[A]: Fold Roller Motor. Drives the stationary clamp drive roller ① as well as the fold rollers (see next page).

[B]: Clamp Rollers.

① Clamp Roller – Drive. Rotated by the fold roller motor, this stationary roller feeds the stack down with the retracting roller closed.

② Clamp Roller – Retracting. Opened and closed by the retraction motor [C].

[C]: Clamp Roller Retraction Motor. Operates the clamp roller cam that retracts the retracting clamp roller. The clamp rollers feed the stack to within 3 mm of the bottom fence when closed and then open to drop the stack onto the bottom fence.

[D]: Clamp Roller HP Sensor. Controls the rotation of the clamp roller retraction motor and cam that open and close the retracting clamp roller.

[E]: Clamp Roller Cam. Forces open the spring loaded retracting clamp roller.

Bottom Fence

[F]: Bottom Fence. Raises the booklet stapled stack to the fold position.

[G]: Bottom Fence HP Sensor. Detects the actuator on the bottom fence and stops it at the home position after folding.

[H]: Bottom Fence Lift Motor. Raises the bottom fence and stapled stack to the fold position prescribed for the paper size.

Downloaded from www.Manualslib.com manuals search engine

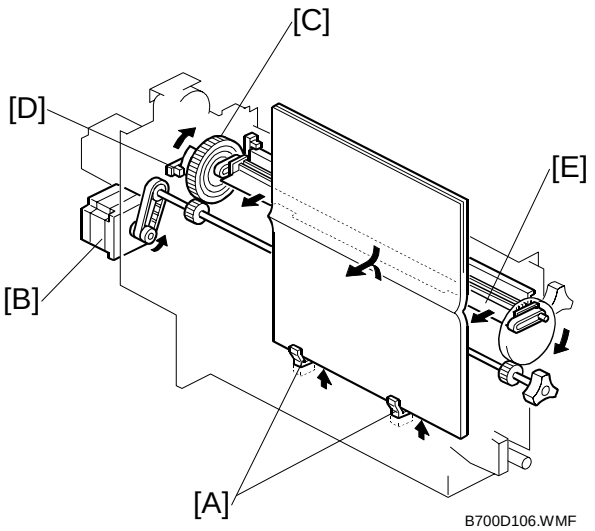

B700D106.WMF

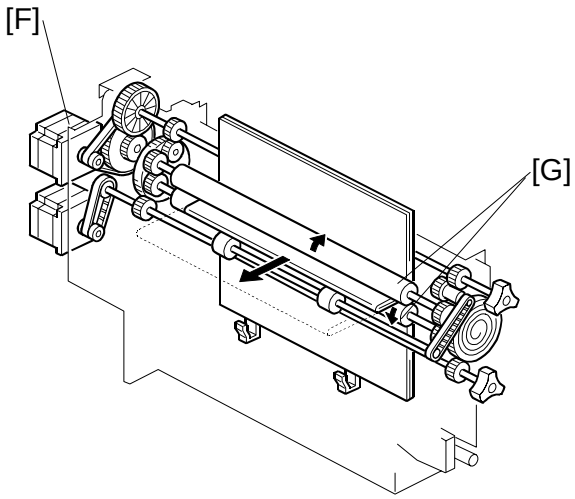

B700D107.WMF

Fold Plate

[A]: Bottom Fence Stack Stoppers. Catches the stack after it is released by the clamp rollers.

[B]: Fold Plate Motor. Drives the timing belt and gears that move the fold plate.

[C]: Fold Plate Cam. Controls the movement of the fold plate to the left (into the nip of the fold rollers) and right (toward the fold plate home position).

[D]: Fold Plate HP Sensor. Controls operation of the fold plate motor.

[E]: Fold Plate. Moves left and pushes the stack into the nip of the fold rollers and then moves right to retract.

Fold Rollers

[F]: Fold Roller Motor. Drives forward to feed out the stack at the fold and then reverses to feed the fold in to sharpen the crease, and then drives forward again to feed out the folded stack. This reverse/forward cycle is done once.

NOTE: This cycle can be repeated by changing the setting of **SP6114.**

[G]: Fold Rollers. Driven by the fold roller motor, this roller pair feeds out the stack at its fold, reverses to feed in the stack to, and then feeds forward again (assisted by the fold unit exit rollers – not shown) to feed out the stack to the lower tray.

Downloaded from www.Manualslib.com manuals search engine

2.10 UPPER TRAY OUTPUT

2.10.1 FEED OUT

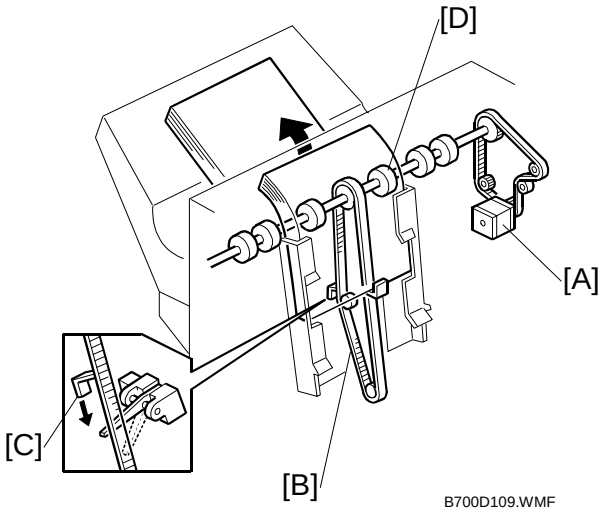

B700D109.WMF

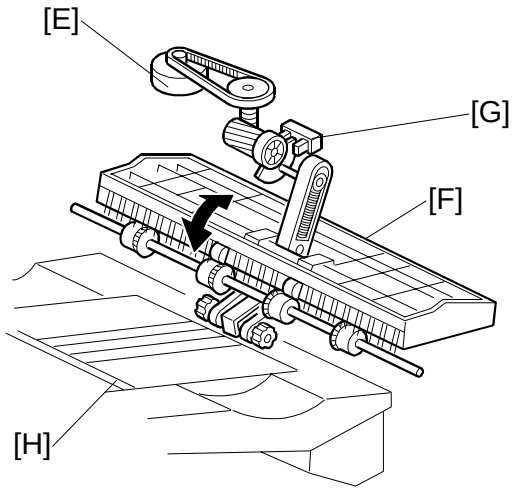

B700D110.WMF

[A]: Feed Out Belt Motor
[B]: Stack Feed-Out Belt
[C]: Pawl
[D]: Exit Rollers
[E]: Exit Guide Plate Motor
[F]: Exit Guide Plate
[G]: Exit Guide Plate HP Sensor
[H]: Upper Tray

Downloaded from www.Manualslib.com manuals search engine

After the stack is stapled, the feed out belt motor [A] switches on and drives the feed out belt [B].

The a pawl [C] attached to the feed out belt catches on the stack and lifts the stack toward the feed out slot.

The exit guide plate [F] remains open as the stack emerges at a prescribed distance away from the exit roller.

Next, the exit guide plate closes and the exit roller feeds the stack out.

The opening and closing of the exit guide plate is controlled by the rising and falling of a link driven by a rotating cam attached to the shaft of the exit guide plate motor [E].

The feed out belt motor stops 300 ms to prevent the stapled stack from rising too high.

Next, the feed out belt motor switches on again, then the pawl actuates its home position sensor and switches off the motor.

There are two output pawls on the feed out belt to improve the productivity of the feed out operation.

Downloaded from www.Manualslib.com manuals search engine

2.10.2 FEED OUT STACKING

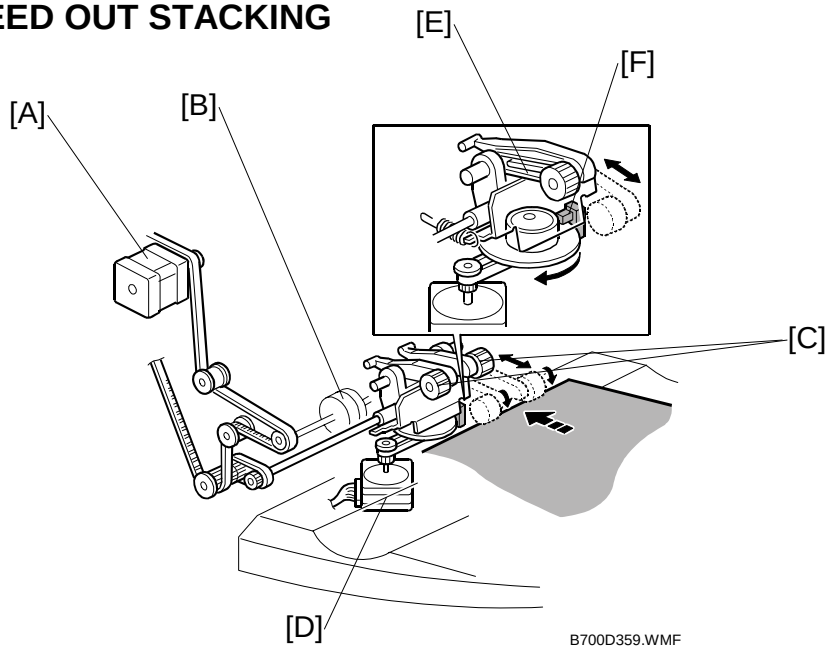

Upper/proof exit motor [A] drives feed roller [B] and stacking sponge roller [C].

Stacking sponge roller motor [D] moves the sponge roller forward and back with link [E].

The position of the stacking sponge roller [C] is controlled by the stacking sponge roller motor which is switched on and off by the stacking roller HP sensor [F].

Downloaded from www.Manualslib.com manuals search engine

2.11 PUNCH UNIT B702 (FOR B700/B701)

2.11.1 OVERVIEW OF OPERATION

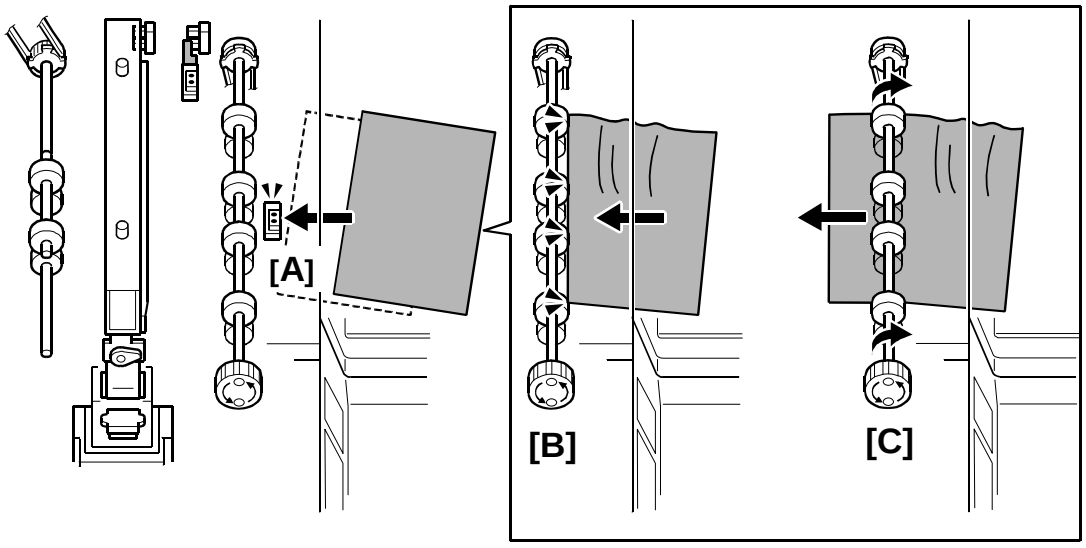

B700D351.WMF

Skew Correction Before Punching

This punch unit corrects for paper skew and then positions the punch unit to punch holes at the correct position. Each sheet is punched one at a time.

Paper feeds out of the copier. The finisher entrance sensor [A] detects the leading edge of the sheet.

The finisher entrance roller [B] stops rotating briefly while the copier exit rollers continue to rotate. This buckles the paper against the finisher entrance roller to correct skew. The finisher entrance roller [C] starts to rotate again and feeds the sheet into the finisher.

These SP codes adjust the skew operation in the punch unit:

- **SP6103**. This SP corrects the punch hole alignment. To do this, it corrects the skew of each sheet by adjusting the amount of time the finisher entrance roller remains off while the exit roller of the machine remains on. For more, see Section "5. Service Tables".
- **SP6104**. This SP determines whether the finisher entrance roller stops to correct skew when paper enters the finisher. You can use this SP to disable the skew correction. For more, see Section "5. Service Tables".

Downloaded from www.Manualslib.com manuals search engine

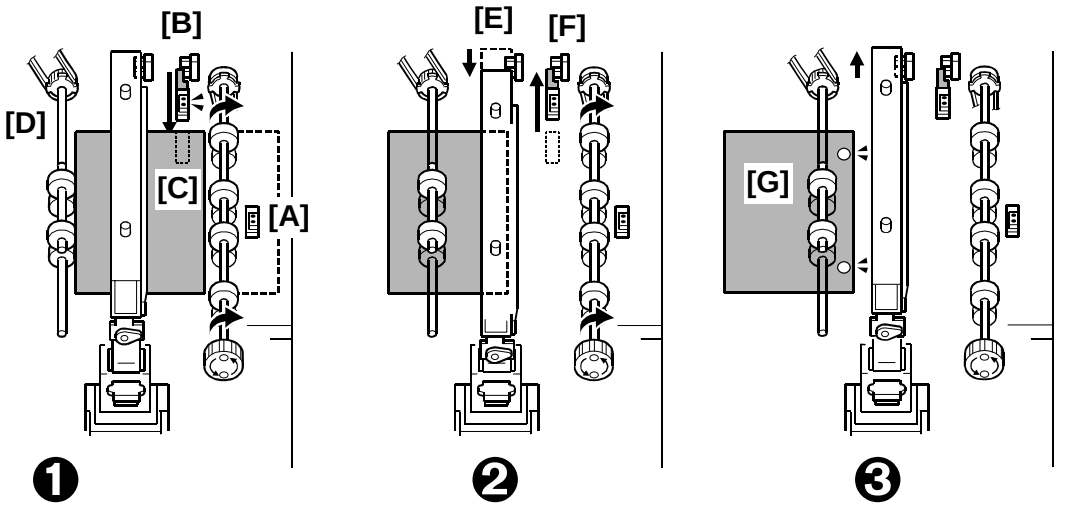

Punch Unit Position Correction

These operations (skew correction before punching, and punch unit position correction) increase the accuracy of the punch alignment.

❶ The trailing edge of the sheet passes the finisher entrance sensor [A].

The paper position slide unit [B] moves the paper position sensor [C] forward to the edge of the paper.

The paper position sensor detects the position of the paper edge and sends this information to the punch unit board. The machine uses the detected position of the paper edge to calculate the correct position for punching.

The upper transport motor switches on and rotates the feed rollers [D] the prescribed distance to position the paper under the punch unit.

❷ Using the result of the position calculation, the punch unit control board moves the punch unit [E] to the adjusted punch position.

The paper position slide unit and its paper sensor, move back to the paper position slide home position sensor [F], and the punch unit fires the punches to make the holes.

❸ The feed rollers [G] feed the punched paper out of the punch unit and into the paper path.

Downloaded from www.Manualslib.com manuals search engine

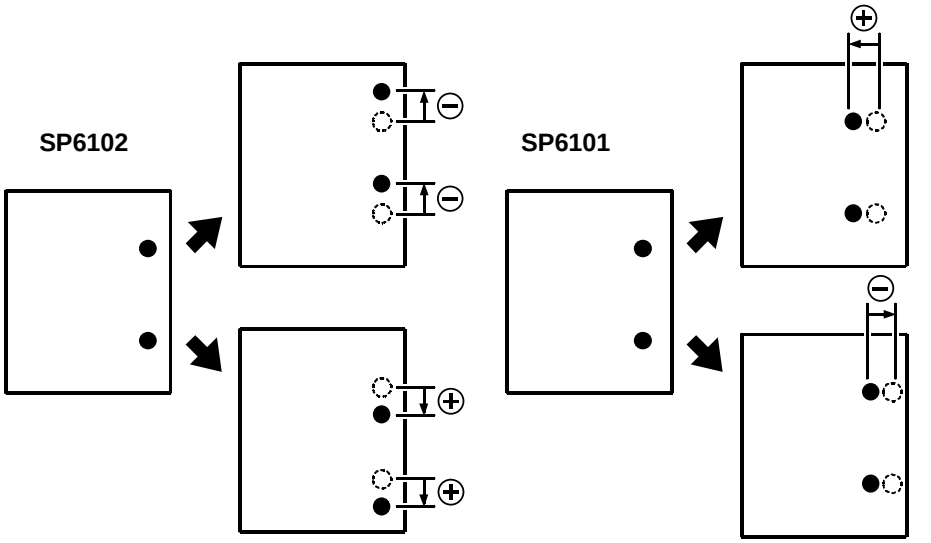

These SP codes adjust the punch hole alignment:

- **SP6101** Adjusts the punch positions in the direction of paper feed.
- **SP6102** Adjusts the punch position perpendicular to the direction of feed.

For more, see Section "5. Service Tables".

Downloaded from www.Manualslib.com manuals search engine

2.11.2 PUNCH MECHANISMS

Paper Position Detection

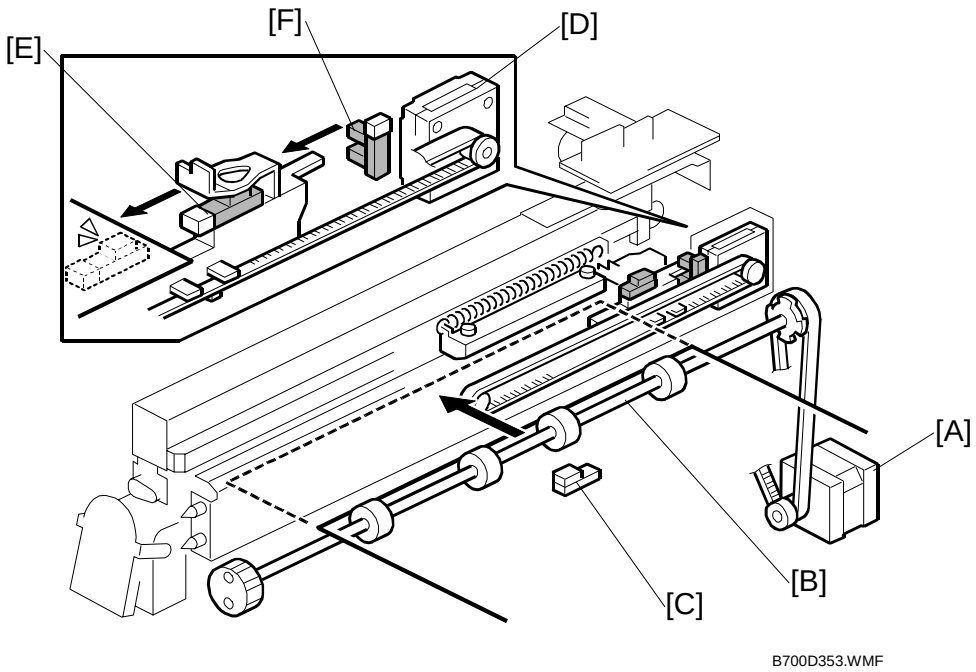

[A]: Finisher Entrance Motor (M1)
[B]: Finisher Entrance Roller
[C]: Finisher Entrance Sensor (S1)
[D]: Paper Position Sensor Slide Motor (M7)
[E]: Paper Position Sensor (S27)
[F]: Paper Position Sensor Slide HP Sensor (S22)

The finisher entrance motor (M1) [A] drives the finisher entrance rollers [B] that feed paper from the copier into the finisher. The finisher entrance sensor (S1) [C] detects paper when it enters the finisher, and detects paper jams.

The paper position slide sensor motor (M7) [D] extends and retracts the paper position slide that holds the paper position sensor (S27) [E]. The paper position sensor detects the position of the paper edge. The detected position of the paper is used to calculate and position the punch unit for punching.

The paper position slide HP sensor (S22) [F] detects the paper position slide when it retracts and stops the paper position slide motor so the slide stops at its home position.

Downloaded from www.Manualslib.com manuals search engine

Punch Unit Movement

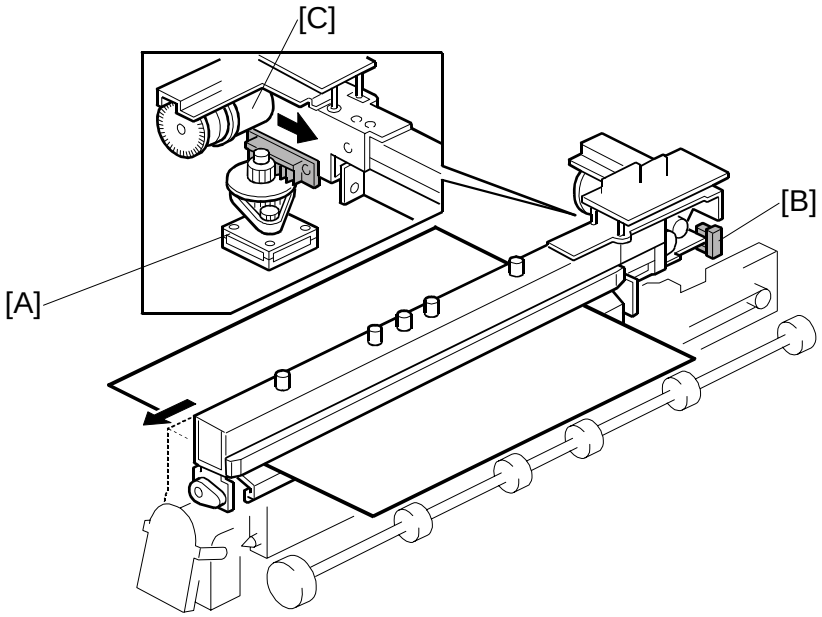

B700D354.WMF

[A]: Punch Movement Motor (M9)
[B]: Punch Movement HP Sensor (S21)
[C]: Punch Drive Motor (M24)

The punch movement motor (M9) [A] extends and retracts the punch unit to position it at the correct position for punching.

The punch movement HP sensor (S21) [B] detects the position when it retracts, switches off the punch position movement motor, and stops the punch unit at its home position.

The punch drive motor (M24) [C] fires the punches that punch holes in the paper below.

Downloaded from www.Manualslib.com manuals search engine

Punch Selection and Firing

[A]: Punch Drive Motor (M24)
[B]: Punch Encoder Wheel
[C]: Punch Encoder Sensor (S24)
[D]: Punch HP Sensor (S23)

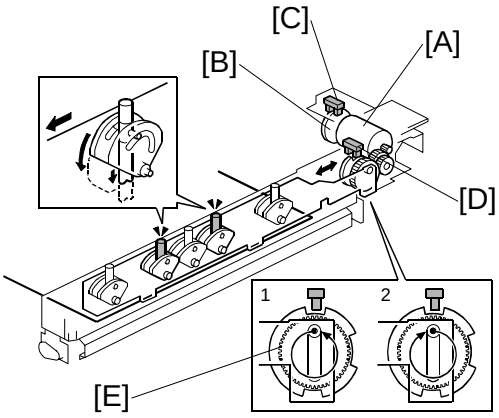

B700D355.WMF

The punch drive motor (M24) [A] turns the small, notched encoder wheel [B] through the gap in the punch encoder sensor [C] (S24). The sensor output is used to control the punch timing.

The timing for 2-hole punching [E] is different from 3-hole punching [F].

When the punch unit is at the punching position, the punch motor turns until the encoder detects the starting position for 2-hole or 3-hole punching.

For two-hole punching, it only turns 180 degrees not 360

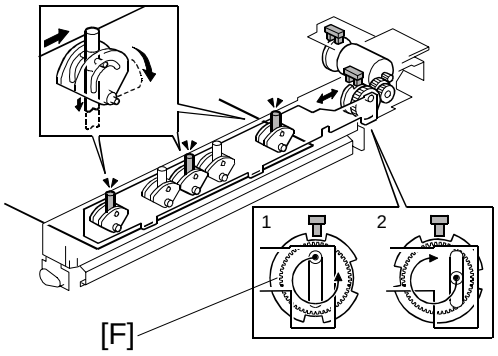

B700D356.WMF

- This is the ‘1’ position in the diagrams (the top diagram is for 2-hole punching, and the bottom diagram is for 3-hole punching).

Then, the punch drive motor turns counter-clockwise to the ‘2’ position. This movement punches the holes in the paper.

Then, the punch drive motor turns clockwise to the ‘1’ position, to be ready for the next sheet of paper.

Downloaded from www.Manualslib.com manuals search engine

2.11.3 PUNCH HOPPER MECHANISM

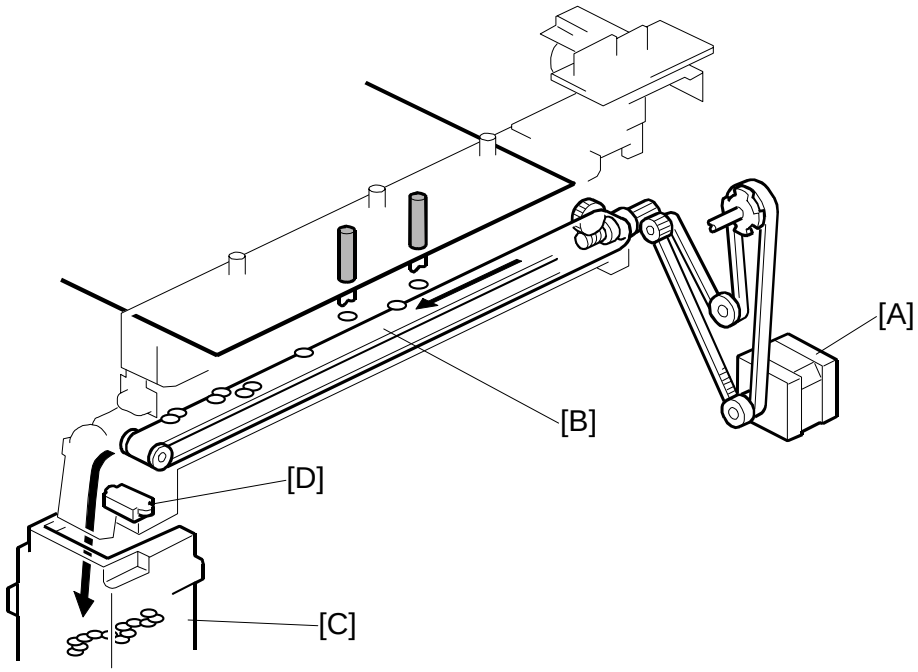

B700D357.WMF

[A]: Finisher Entrance Motor (M1)
[B]: Punch Waste Belt
[C]: Punch Waste Hopper
[D]: Punch Hopper Full Sensor (S4)

The finisher entrance motor (M1) [A] drives the timing belt and gears that rotate the punch waste belt [B].

The punchouts fall from the punch unit onto the belt. The belt moves the punchouts to the front and dumps them in the punch waste hopper [C].

The punch hopper full sensor [D]:

- Signals that the hopper is full when it detects the top of the stack of punchouts that have collected in the hopper.
- It also detects when the punch hopper is set properly.

Downloaded from www.Manualslib.com manuals search engine

2.12 FINISHER JAM DETECTION

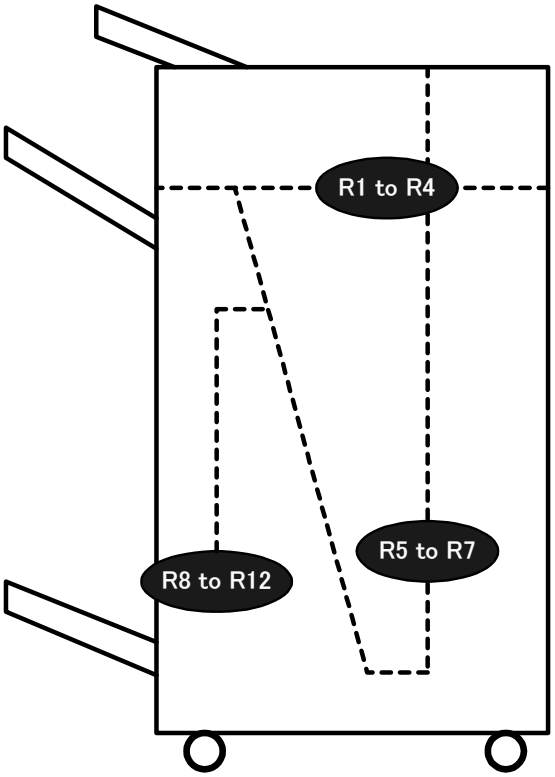

B700D996.WMF

Display	Mode	Jam	What It Means
R1 to R3	Proof Shift Staple	Finisher entrance sensor late	After main machine exit sensor goes OFF, finisher entrance sensor does not go ON even after enough time to feed 450 mm.
		Finisher entrance sensor lag	After finisher entrance sensor goes ON, it does not go OFF after enough time to feed a sheet 1.5 times its length has elapsed.
R3	Proof	Proof exit sensor late	After finisher entrance sensor goes ON, proof exit sensor does not go ON even after enough time to feed 450 mm.
		Proof exit sensor lag	After finisher entrance sensor goes OFF, proof exit sensor does not go OFF even after enough time to feed 450 mm.
R4	Shift	Upper tray exit sensor late	After finisher entrance sensor goes ON, upper tray exit sensor does not go ON even after enough time to feed 485 mm.
		Upper tray exit sensor lag	After finisher entrance sensor goes OFF, upper tray exit sensor does not go OFF even after enough time to feed 650 mm.

Downloaded from www.Manualslib.com manuals search engine

Display	Mode	Jam	What It Means
R5 to R7	Staple	Pre-stack tray exit sensor lag	After finisher entrance sensor goes ON, pre-stack tray exit sensor does not go ON even after enough time to feed 650 mm.
		Pre-stack tray exit sensor late	After finisher entrance sensor goes ON, pre-stack tray exit sensor does not go OFF even after enough time to feed 1650 mm.
R8 to R12	Booklet Staple (B700 Only)	Fold unit entrance sensor late (S26)	The fold unit entrance sensor goes not go ON after enough time has elapsed to feed 1.5 times the length of the stack after the leading edge of the stack reaches the stack present sensor (S32).
		Fold unit exit sensor late (S31)	The fold unit exit sensor does not go ON after enough time has elapsed for the stack to feed 1.5 times its length from the fold position.
		Fold unit exit sensor lag (S31)	After the fold unit exit sensor goes ON, it does not go OFF after enough time has elapsed to feed 442.9 mm.

Downloaded from www.Manualslib.com manuals search engine

COVER INTERPOSER TRAY
(Machine Code: B704)

Downloaded from www.Manualslib.com manuals search engine

TABLE OF CONTENTS

1. REPLACEMENT AND ADJUSTMENT B704-1

1.1 EXTERNAL COVERS B704-1
1.2 FEED UNIT AND PICK-UP ROLLER B704-2
1.3 FEED BELT B704-3
1.4 GUIDE PLATE ADJUSTMENT B704-4
1.5 MAIN BOARD B704-5
1.6 MOTOR REPLACEMENT B704-6
1.16.1 VERTICAL TRANSPORT MOTOR B704-6
1.16.2 BOTTOM PLATE LIFT MOTOR B704-6
1.16.3 FEED MOTOR, TRANSPORT MOTOR B704-7

2. DETAILS B704-8

2.1 OVERVIEW B704-8
2.1.1 MAIN LAYOUT B704-8
2.1.2 DRIVE LAYOUT B704-9
2.1.3 PAPER SIZE DETECTION B704-10
2.1.4 PAPER PATH B704-13
2.2 PAPER FEED B704-14
Power On B704-14
Paper Separation and Feed B704-14
Bottom Tray Lift B704-14
Paper Near-end B704-14
Paper End B704-14

Downloaded from www.Manualslib.com manuals search engine

1. REPLACEMENT AND ADJUSTMENT

1.1 EXTERNAL COVERS

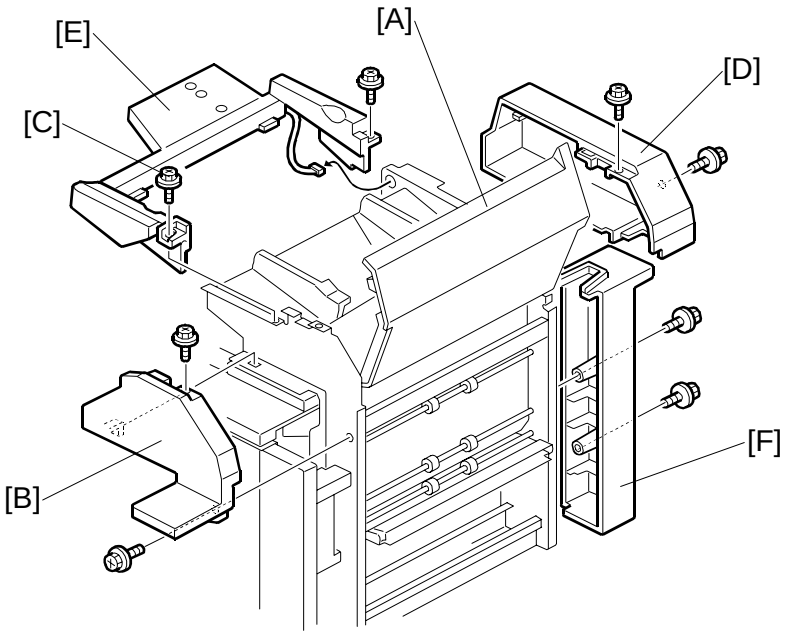

B470R001.WMF

[A]: Open the feed cover.
[B]: Upper front cover (x 2)
NOTE: To remove the upper front cover, screw [C] must be removed.
[D]: Rear upper cover (x 2)
[E]: Slip sheet tray (x 2, x 1)
[F]: Rear middle cover (x 2)

Downloaded from www.Manualslib.com manuals search engine

1.2 FEED UNIT AND PICK-UP ROLLER

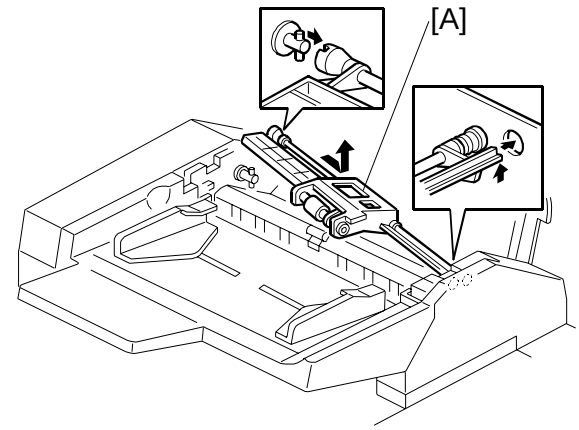

B470R002.WMF

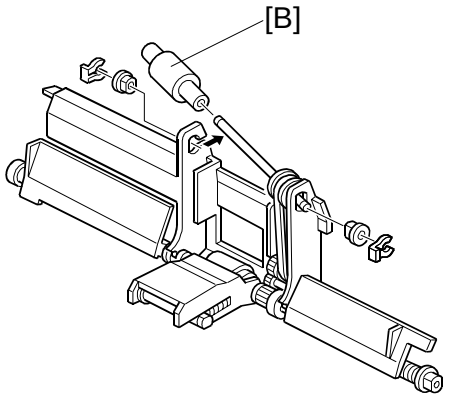

B470R003.WMF

Open the feed cover.

[A]: Feed unit

- The unit is spring loaded. Push it to the right to release it, then lift it out.

[B]: Pick-up roller (x 2, bushings x 2)

Downloaded from www.Manualslib.com manuals search engine

1.3 FEED BELT

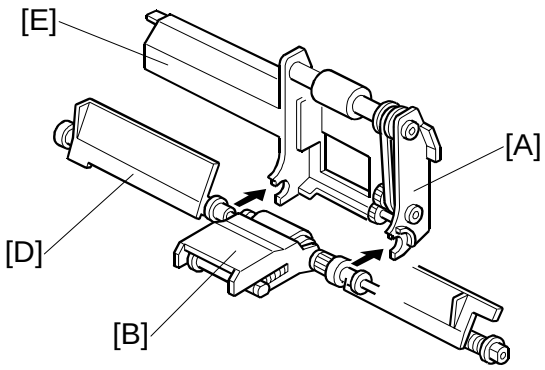

B470R004.WMF

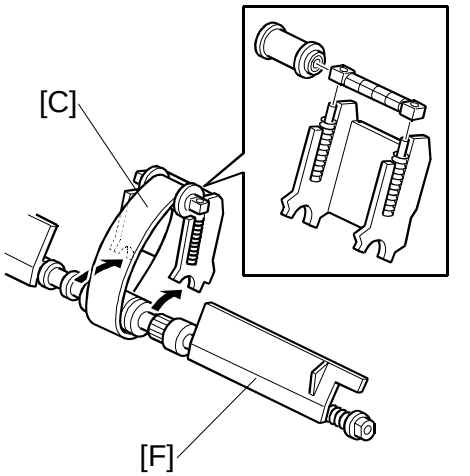

B470R005.WMF

Feed unit (☛ 1.2)

[A]: Pick-up roller unit.
- Pull the unit away from the bushings in the direction of the arrow.

[B]: Feed belt holder
- Hold the feed belt holder by the sides, then lift up to separate from the holder.
- Pull slowly to avoid losing the springs.

[C]: Feed belt.

Re-assembly

1. Position the pick-up roller unit [A] and feed belt holder [B] as shown above.
2. On the rear side, slide out the bushing, and rotate [D] until its flat side is parallel with [E], then snap it on.
3. On the front side, rotate [F] until its flat side is parallel with [D], then snap it on. Viewed from the bottom, the plates must be aligned.

Downloaded from www.Manualslib.com manuals search engine

1.4 GUIDE PLATE ADJUSTMENT

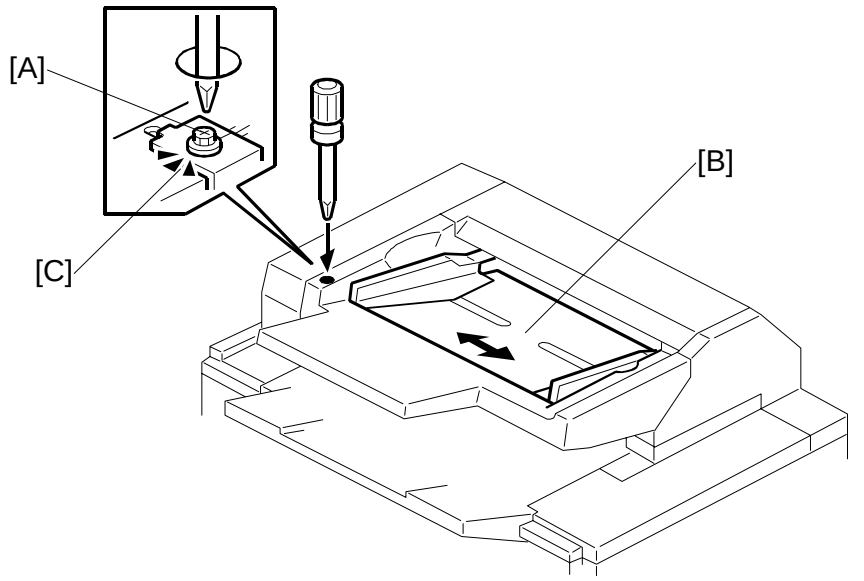

B470R151.WMF

Adjust the guide plate if the holes punched in the covers or slip sheets are not correctly aligned with holes punched in the other sheets.

1. Open the feed cover.
2. Loosen the screw [A].
3. Push the table [B] left or right to change its position, then tighten the screw.
   NOTE: If you want to see the scale [C], you must remove the rear cover and the support tray.

Downloaded from www.Manualslib.com manuals search engine

1.5 MAIN BOARD

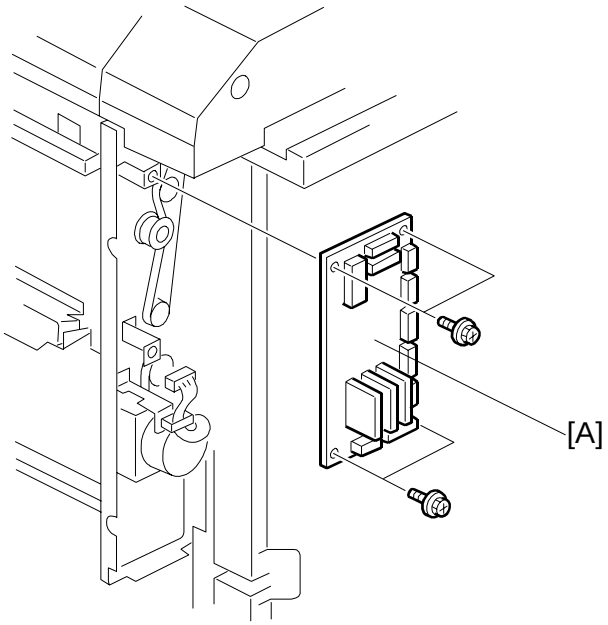

B470R101.WMF

Open the top cover.

Rear cover (x 1)

[A]: Main board (x 9, x 4)

NOTE: All DIP switch settings on the main board of the cover sheet unit should be set to OFF.

Downloaded from www.Manualslib.com manuals search engine

1.6 MOTOR REPLACEMENT

1.6.1 VERTICAL TRANSPORT MOTOR

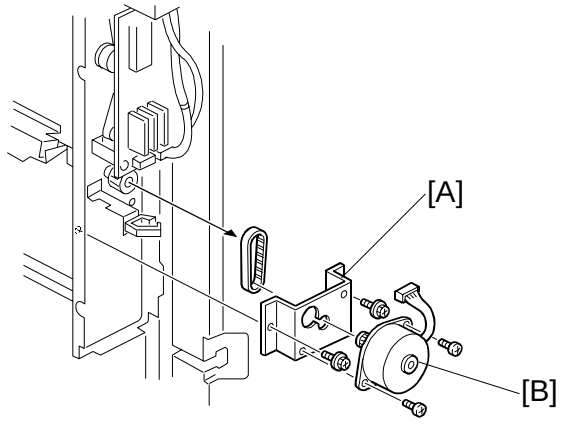

B470R102.WMF

Open the top cover.

Rear middle cover (☞ x 1) (☛ 1.1)

[A]: Motor bracket (☞ x 1, harness x 1, ☞ x 2, timing belt x 1)

[B]: Motor (☞ x 2)

1.6.2 BOTTOM PLATE LIFT MOTOR

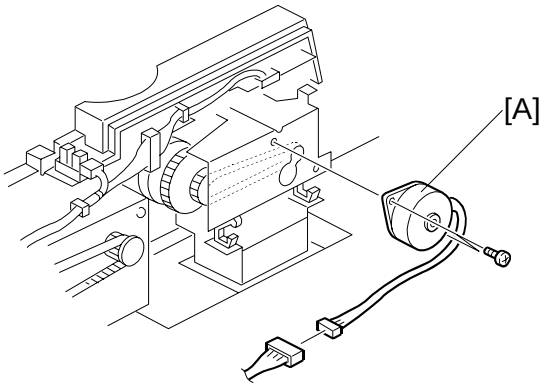

B470R104.WMF

Rear upper cover (☛ 1.1)

[A]: Bottom plate lift motor (harness x 2, ☞ x 1, ☞ x 2)

Downloaded from www.Manualslib.com manuals search engine

1.6.3 FEED MOTOR, TRANSPORT MOTOR

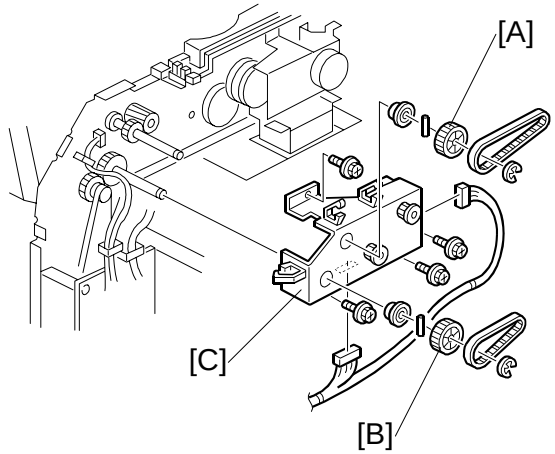

B470R105.WMF

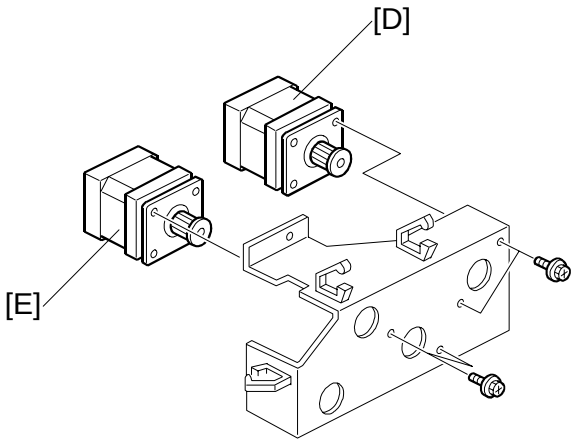

B470R103.WMF

Rear upper cover (☛ 1.1)

NOTE: When removing the feed gear and transport gear, hold one hand under the gear to catch the pin as it falls from the hole in the shaft.

[A]: Feed gear (ℂ x 1, pin x 1, timing belt x 1, bushing x 1)
[B]: Transport gear (ℂ x 1, pin x 1, timing belt x 1, bushing x 1)
[C]: Motor bracket (harness x 5, 🔩 x 4)
[D]: Feed motor (🖐 x 1, 🔩 x 2)
[E]: Transport motor (🖐 x 1, 🔩 x 2)

Peripherals

Downloaded from www.Manualslib.com manuals search engine

2. DETAILS

2.1 OVERVIEW

2.1.1 MAIN LAYOUT

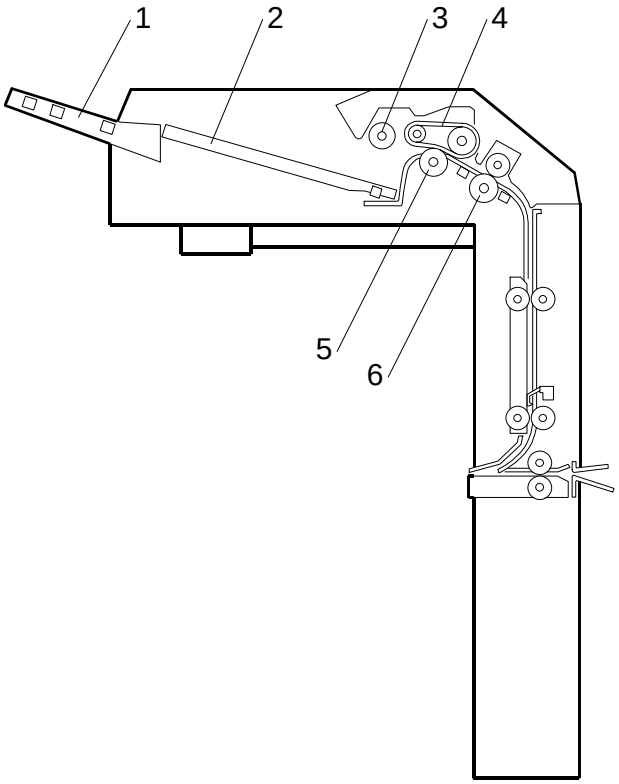

B470D001.WMF

1. Support tray
2. Slip sheet tray
3. Pick-up roller
4. Feed belt
5. Separation roller
6. Grip roller

Downloaded from www.Manualslib.com manuals search engine

2.1.2 DRIVE LAYOUT

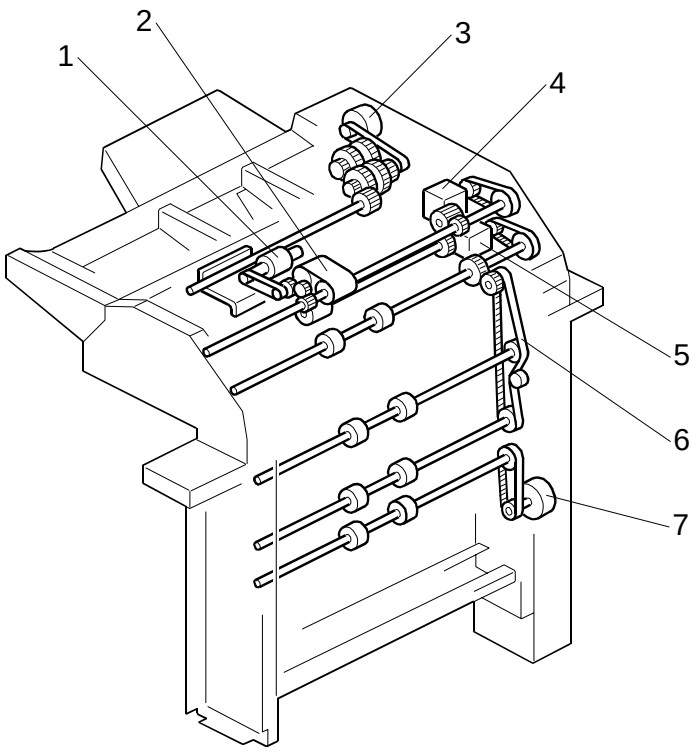

B470D003.WMF

1. Pick-up Roller
2. Feed Belt
3. Bottom Plate Lift Motor
4. Feed Motor
5. Transport Motor
6. Timing Belt
7. Vertical Transport Motor

Downloaded from www.Manualslib.com manuals search engine

2.1.3 PAPER SIZE DETECTION

The width sensors [A] (S1, S2, S3) and length sensors [B] (S4, S5, S6) detect the width and length of the original on the interposer feed tray.

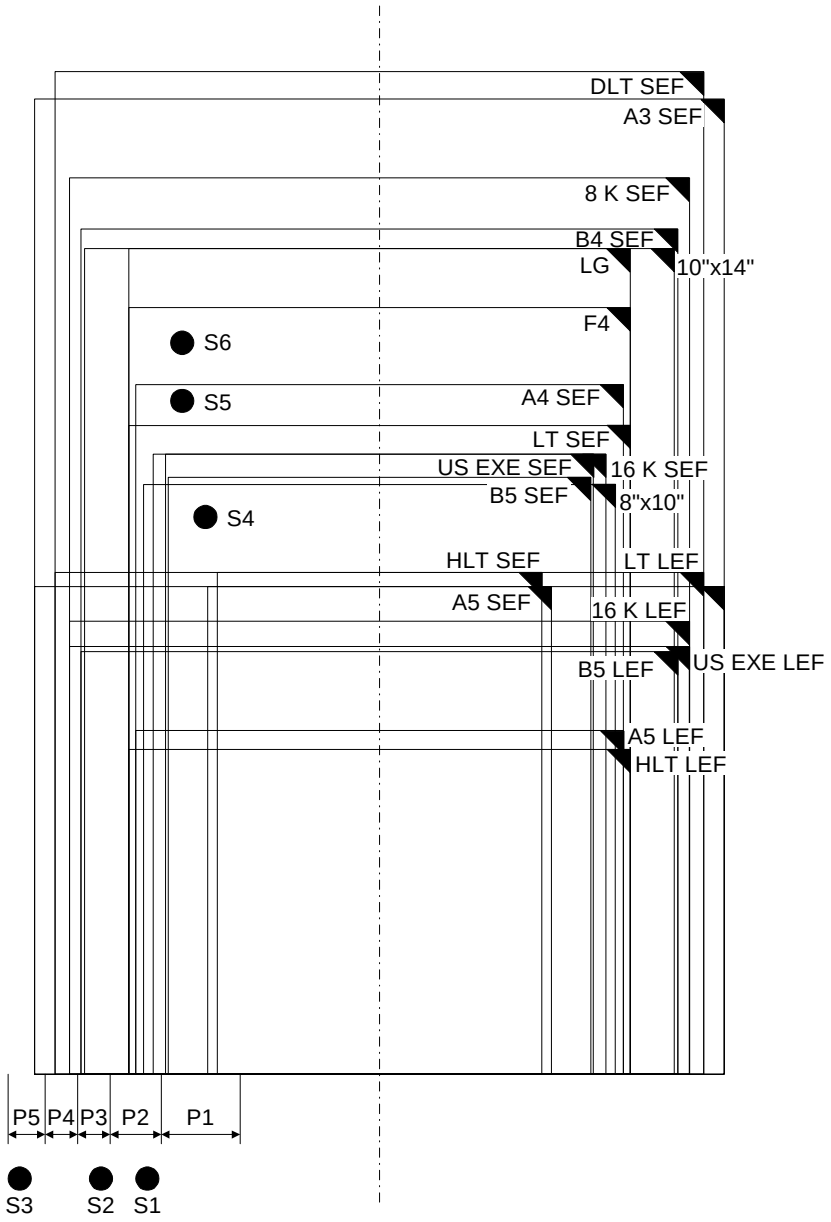

Downloaded from www.Manualslib.com manuals search engine

The table below lists the sensor output for each paper size.

	S1	S2	S3	S4	S5	S6
A3	0	1	1	1	1	1
B4	1	1	0	1	1	1
A4 SEF	1	0	0	1	1	0
A4 LEF	0	1	1	0	0	0
B5 SEF	0	0	0	1	0	0
B5 LEF	1	1	0	0	0	0
A5 SEF	0	0	0	0	0	0
A5 LEF	1	0	0	0	0	0
11" x 17"	1	1	1	1	1	1
10" x 14" SEF	1	1	0	1	1	1
8 1/2" x 14"	1	0	0	1	1	1
8 1/2" x 13"	1	0	0	1	1	1
8 1/2" x 11"	1	0	0	1	0	0
11" x 8 1/2"	1	1	1	0	0	0
8" x 10"	1	0	0	1	0	0
5 1/2" x 8 1/2"	0	0	0	0	0	0
8 1/2" x 5 1/2"	1	0	0	0	0	0
7 1/2" x 10 1/2" (US Exec.)	0	0	0	1	0	0
10 1/2" x 7 1/2" (US Exec.)	1	1	1	0	0	0
8 K	1	1	1	1	1	1
16 K SEF	1	0	0	1	0	0
16 K LEF	1	1	1	0	0	0

The cover interposer tray detects all the paper sizes listed above. However, there are some limitations on the display of the correct paper size.

		North America	Europe/Asia
B4 SEF	257 x 364 mm	Displays 10"x14 *1	
B5 SEF	182 x 257	Displays "US Exec." *1	
A5 SEF	148 x 210	Displays "HLT SEF" *1	
A5 LEF	210 x 148	Displays "HLT LEF" *1	
DLT SEF	11" x 17"		Displays "8K LEF" *2
LG SEF	8 1/2" x 14"		Displays "F4 SEF" *2
LT SEF	8 1/2" x 11"		Displays "16 K SEF" *2
LT LEF	11" x 8 1/2"		Displays "16 K LEF" *2

*1: Cannot be corrected.

*2: B064 series: Can be corrected with SP5959 006 (Paper Size – Cover Sheet).
B140 series: Can be corrected with SP5158

Downloaded from www.Manualslib.com manuals search engine

B064 series: Paper Size Detection

North America

Execute SP5959 006 and enter the correct number for the size of the paper loaded for feeding from the cover interposer tray.

Loaded	Display (Default)	To Select for Display	Enter
8 1/2" x 13"	8 1/2" x 14"	8 1/2" x 13"	165
10 1/2" x 7 1/2"	8 1/2" x 11"	10 1/2" x 7 1/2"	173
8" x 10"	8 1/2" x 11"	8" x 10"	171

Europe/Asia

Execute SP5959 006 and enter the correct number for the size of the paper loaded for feeding from the cover interposer tray.

Loaded	Display (Default)	To Select for Display	Enter
11" x 17"	8 K	11" x 17"	160
8 1/2" x 11"	16 K SEF	8 1/2" x 11"	166
11" x 8 1/2"	16 K LEF	11" x 8 1/2"	38
8 1/4" x 13"	8 1/2" x 13" SEF	8 1/4" x 13"	168

B070/B071, B140 series: Paper Size Detection

Some paper sizes are almost the same and cannot be detected as different sizes by the sensors. To select the sizes that are detected, use SP 5158.

B132 series: Use SP 6107.

Downloaded from www.Manualslib.com manuals search engine

2.1.4 PAPER PATH

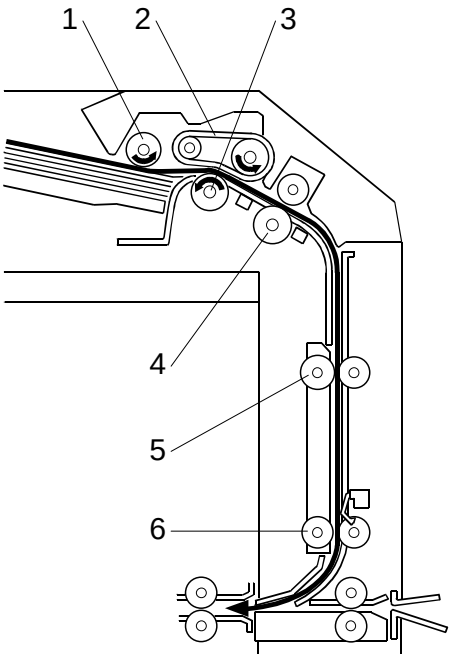

B470D006.WMF

1. Pick-up Roller
2. Feed Belt
3. Separation Roller
4. Grip Roller
5. Transport Roller 1
6. Transport Roller 2

The paper feeds from the tray, to the feed belt, then to the grip roller and down into the paper path to the finisher below.

Downloaded from www.Manualslib.com manuals search engine

2.2 PAPER FEED

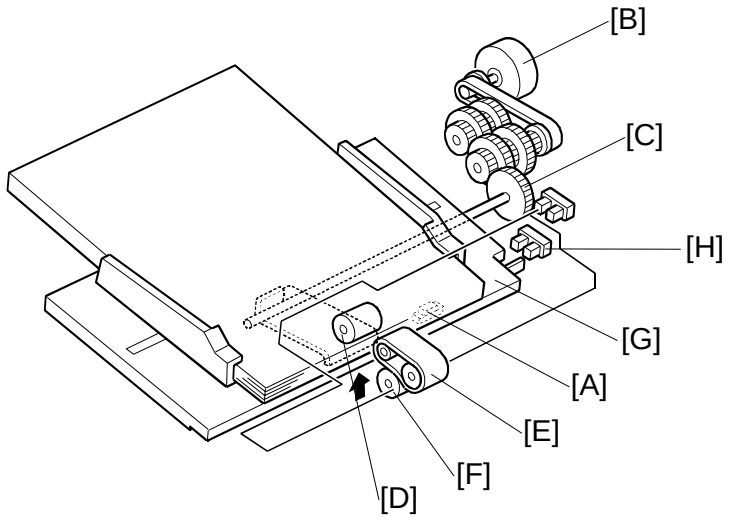

Power On

When paper is placed on the tray, the paper set sensor [A] in the tray actuates and switches on the bottom plate lift motor [B]. The top of the stack raises the pick-up roller unit until the actuator on this unit actuates the pick-up roller position sensor [C] and switches the motor off.

Paper Separation and Feed

The pick-up roller [D] picks up the original, and the feed belt [E] feeds the sheet to the grip roller. The separation roller [F] reverses if more than one sheet is fed

Bottom Tray Lift

As sheets feed from the top of the stack:

- The pick-up roller unit descends until the actuator on the pick-up roller unit drops out of the pick-up roller position sensor [C].
- The bottom plate lift motor switches on to raise the stack until the actuator enters the pick-up roller unit position sensor again and switches the motor off.
- This repeats until the end of the job or until paper runs out.

Paper Near-end

Near-end is detected when the actuator [G] on the bottom plate enters the near-end sensor [H].

Paper End

After the last sheet feeds the paper set sensor [A] goes off and signals paper out.

Downloaded from www.Manualslib.com manuals search engine

3000-SHEET FINISHER
(Machine Code: B706)

Downloaded from www.Manualslib.com manuals search engine

TABLE OF CONTENTS

1. REPLACEMENT AND ADJUSTMENT B706-1

2. PREVENTIVE MAINTENANCE B706-2

3. REPLACEMENT AND ADJUSTMENT B706-3

3.1 DOOR AND COVER REPLACEMENT B706-3
Front Door B706-3
Left Inner Cover B706-3
Inner Cover B706-3
Side Table and Upper Tray B706-4
Left Covers B706-5
Rear Cover and Top Cover B706-5
Shift Tray B706-5
3.2 ROLLERS B706-6
3.2.1 SHIFT POSITIONING ROLLER B706-6
3.2.2 POSITIONING ROLLER B706-7
3.2.3 ALIGNMENT BRUSH ROLLER B706-8
3.3 STACK FEED-OUT BELT B706-9
3.4 JOGGER FENCE B706-10
3.5 SENSORS B706-11
3.5.1 STACK HEIGHT 1, 2 AND EXIT GUIDE OPEN SENSOR B706-11
Stack Height Sensors 1 and 2 ..... B706-11
Exit Guide Open Sensor B706-11
3.5.2 UPPER TRAY PAPER LIMIT AND EXIT SENSOR B706-12
Upper Tray Paper Limit Sensor B706-12
Upper Tray Exit Sensor B706-12
3.5.3 SHIFT TRAY EXIT SENSOR B706-13
3.5.4 ENTRANCE AND STAPLER TRAY ENTRANCE SENSORS B706-14
Entrance Sensor B706-14
Stapler Tray Entrance Sensor B706-14
3.5.5 PRE-STACK PAPER SENSOR B706-15
3.5.6 STAPLE WASTE HOPPER SENSOR B706-16
3.5.7 STAPLER ROTATION HP AND STAPLER RETURN SENSORS B706-17
3.6 STAPLER B706-18
3.7 SHIFT TRAY MOTOR B706-19
3.7.1 STACKING ROLLER / ROLLER DRAG MOTORS, RETURN HP SENSOR. B706-20
3.8 Z-FOLD JOGGER UNIT B706-23
3.8.1 Z-FOLD JOGGER UNIT COVER B706-23
3.8.2 Z-FOLD JOGGER UNIT B706-24
3.8.3 JOGGER TOP FENCE MOTOR B706-25

Downloaded from www.Manualslib.com manuals search engine

3.8.4 JOGGER BOTTOM FENCE MOTOR B706-26
3.9 PUNCH UNIT (B531) B706-27
3.9.1 PUNCH POSITION ADJUSTMENT B706-27
Front to Rear Adjustment B706-27
Right to Left Adjustment B706-27
3.10 JOGGER UNIT (B513) B706-28
3.10.1 JOGGER UNIT B706-28
3.10.2 JOGGER UNIT PCB B706-29
3.10.3 JOGGER UNIT MOTOR B706-30

4. TROUBLESHOOTING B706-31

5. SERVICE TABLES B706-32
5.1 DIP SWITCHES B706-32
5.2 TEST POINTS B706-32
5.3 FUSES B706-32

6. DETAILS B706-33
6.1 TRAY AND STAPLER JUNCTION GATE B706-33
6.2 PAPER PRE-STACKING B706-34
6.3 JOGGER UNIT PAPER POSITIONING B706-35
6.4 STAPLER UNIT MOVEMENT B706-36
Side-to-Side B706-36
Rotation (1) B706-37
Rotation (2) B706-37
6.5 STAPLER B706-38
6.6 FEED-OUT B706-40
6.7 PAPER EXIT STACKING B706-41
6.8 SHIFT TRAY B706-42
6.8.1 OVERVIEW B706-42
Stand-by Mode B706-42
6.8.2 SHIFT TRAY UP/DOWN MOVEMENT B706-43
Sort/Stack Mode (Shift Mode) B706-43
Staple Mode B706-43
6.8.3 SHIFT TRAY LOWER LIMIT DETECTION B706-44
6.9 SHIFT TRAY SIDE-TO-SIDE MOVEMENT B706-45
6.10 STAPLING Z-FOLDED PAPER B706-46
6.11 JAM CONDITIONS B706-47
6.12 PUNCH UNIT (B531) B706-48
6.12.1 PUNCH UNIT DRIVE B706-48
6.12.2 PUNCH WASTE COLLECTION B706-49
6.13 JOGGER UNIT(B513) B706-50
6.13.1 JOGGER UNIT MECHANICAL LAYOUT B706-50
6.13.2 JOGGER UNIT DRIVE B706-51

7. OVERALL MACHINE INFORMATION B706-52
7.1 MECHANICAL COMPONENT LAYOUT B706-52
7.2 ELECTRICAL COMPONENT DESCRIPTION B706-53
7.3 DRIVE LAYOUT B706-56

Downloaded from www.Manualslib.com manuals search engine

Downloaded from www.Manualslib.com manuals search engine

1. INSTALLATION

For details about installing the 3000 Sheet Finisher B706, please refer to the instructions you received with the instructions or the “1. Installation” in the main machine service manual.

Downloaded from www.Manualslib.com manuals search engine

2. PREVENTIVE MAINTENANCE

For details about the 3000 Sheet Finisher B706 PM table, please refer to Section "2. Preventive Maintenance" in the main Service Manual.

Downloaded from www.Manualslib.com manuals search engine

3. REPLACEMENT AND ADJUSTMENT

3.1 DOOR AND COVER REPLACEMENT

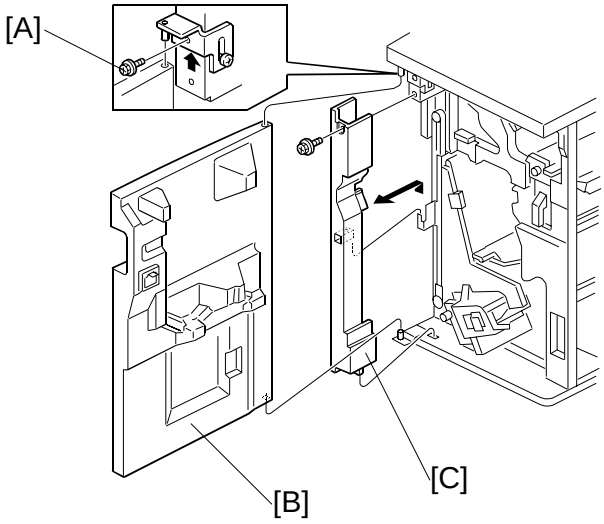

B478R502.WMF

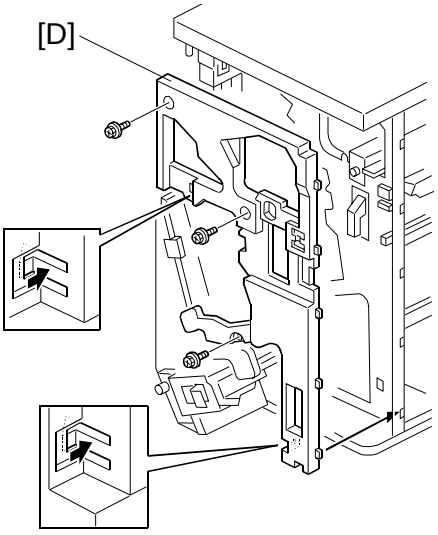

B478R505.WMF

Front Door

1. Remove the front door screw [A] (☞ x 1).
2. Remove the front door [B].

Left Inner Cover

1. Remove the front door.
2. Remove the left inner cover [C] (☞ x 1).

Inner Cover

1. Remove the inner cover [D] (☞ x 3).

Downloaded from www.Manualslib.com manuals search engine

Side Table and Upper Tray

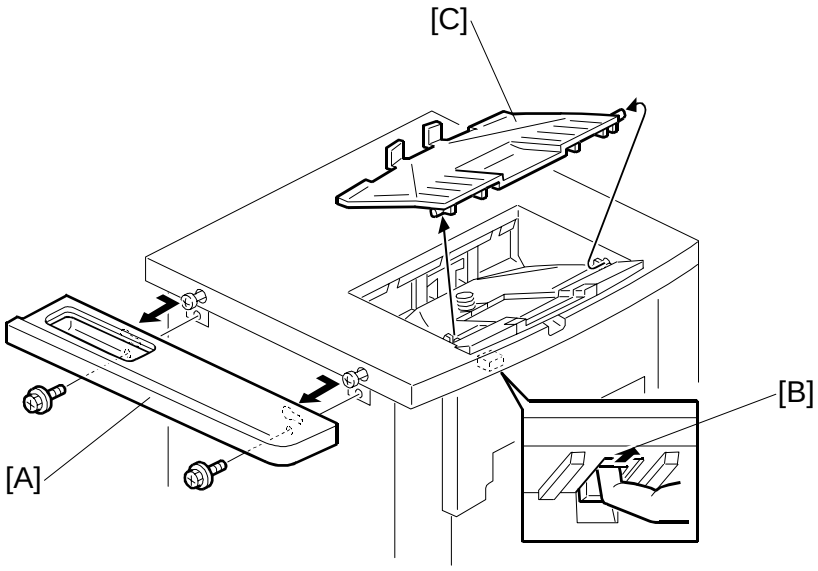

1. Remove the side table [A] (☞ x 2). Slide to the right to remove it.
2. Click the release lever [B] and remove the upper tray [C].

Downloaded from www.Manualslib.com manuals search engine

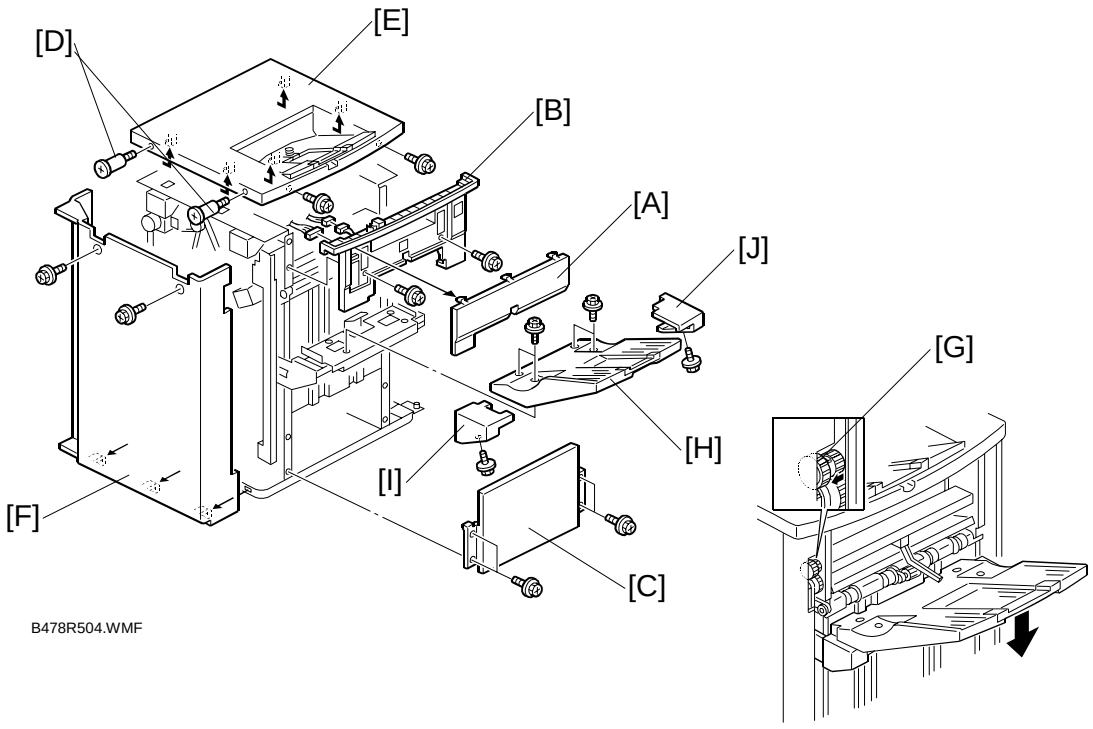

Left Covers

1. Remove the left upper panel [A].
2. Remove the left upper cover [B] (x 2, x 2).
3. Remove the door and left inner cover. (See “Front Door and Left Inner Cover Replacement”.)
4. Remove the rear cover [F] (x 2).
5. Remove the left lower cover [C] (x 4).

Rear Cover and Top Cover

1. Remove the upper tray. (See “Side Table and Upper Tray”.)
2. Remove the step screws [D] (x 2).
3. Remove the top cover [E] (x 2). Slide to the right to remove.
4. Remove the rear cover [F] (x 2).

Shift Tray

1. If you need to lower the shift tray, support the bottom of the tray with your hand, then pull the gear toward you [G] to release the tray and lower it.
2. Remove the shift tray [H] (x 4).
3. Remove the shift tray rear cover [I] and front cover [J] (x 1 each).

Downloaded from www.Manualslib.com manuals search engine

3.2 ROLLERS

3.2.1 SHIFT POSITIONING ROLLER

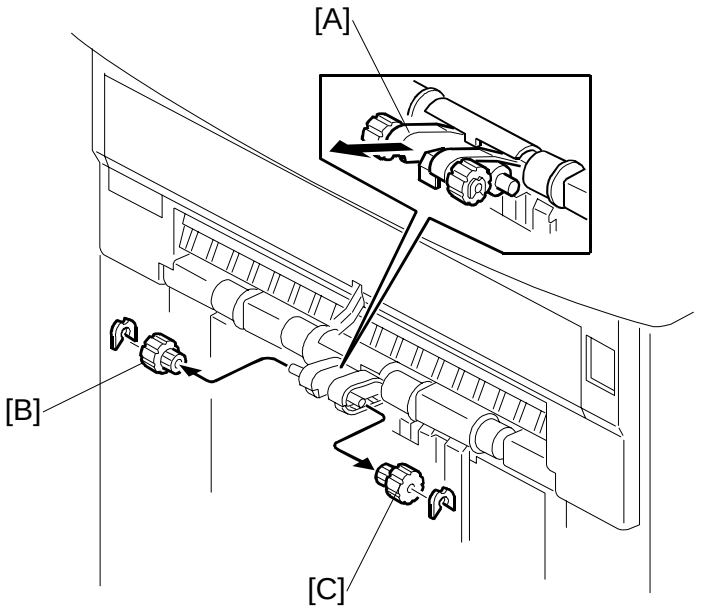

1. Above the shift tray, pull the roller mount [A] out.
2. Remove the rollers [B] and [C] (⟲ x 1 each)

Downloaded from www.Manualslib.com manuals search engine

3.2.2 POSITIONING ROLLER

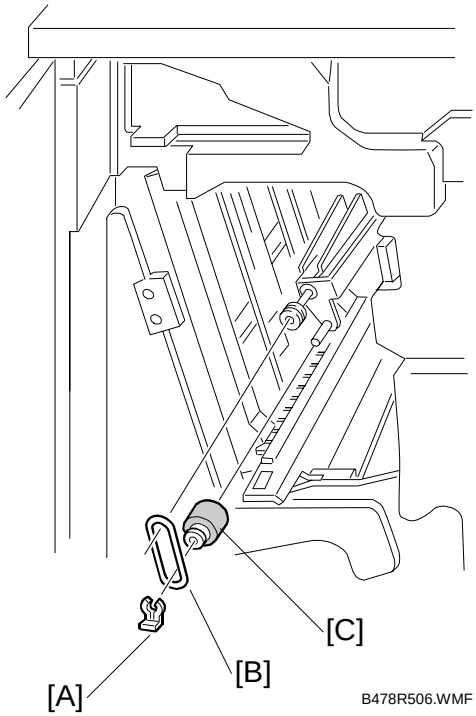

1. Open the front door.
2. Remove the snap ring [A].
3. Release the rubber belt [B].
4. Replace the positioning roller [C].

Downloaded from www.Manualslib.com manuals search engine

3.2.3 ALIGNMENT BRUSH ROLLER

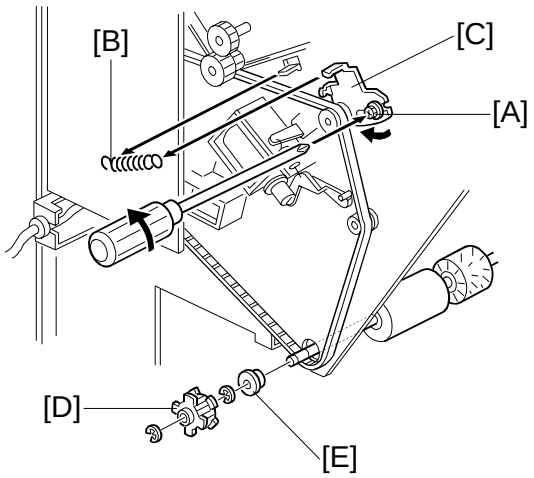

B478R507.WMF

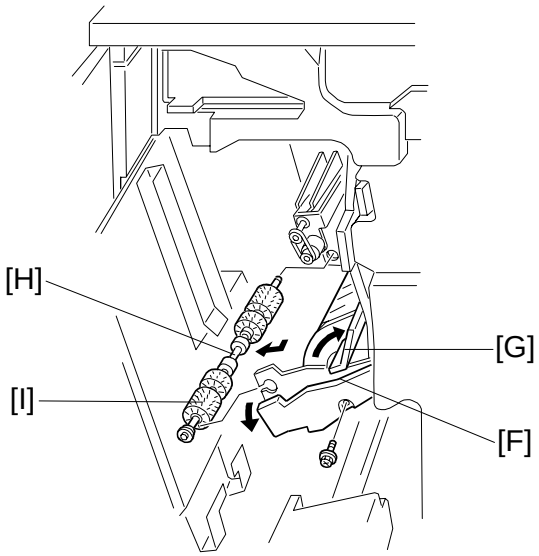

B478R508.WMF

1. Open the front door and pull out the staple unit.
2. Remove the rear cover.
3. Remove the main board and all connectors (x 8).
4. Remove the screw [A] and tension spring [B] for the tension bracket [C], and release the tension of the timing belt.
5. Remove the pulley [D] and bushing [E] (x 2).
6. Remove the inner cover [F] (x 1).
7. Open the guide [G], then remove the alignment brush roller assembly [H] (x 1).
8. Remove the alignment brush roller [I] (x 1, bushing x 1 front/back).

Downloaded from www.Manualslib.com manuals search engine

3.3 STACK FEED-OUT BELT

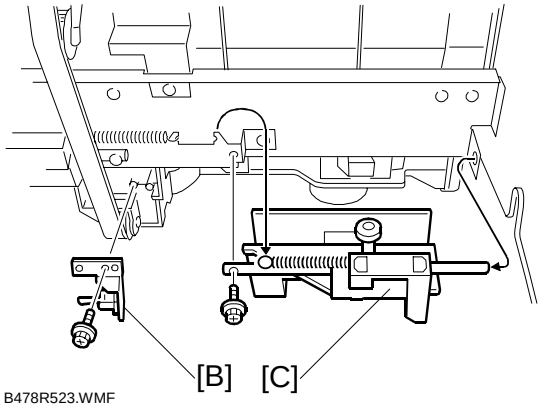

B478R523.WMF

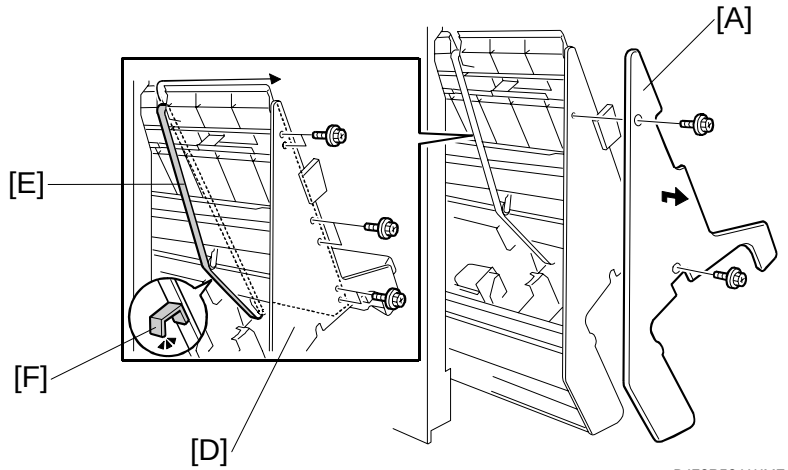

B478R524.WMF

1. Open the front door.
2. Pull out the jogger and stapler unit.
3. Remove the inner cover [A] (x 2).
4. Remove the sensor bracket [B] (x 1, x 1, clamp x 1).
5. Remove the front guide [C] (x 1, spring x 1).
   NOTE: When re-installing, make sure that the flat end of the shaft is against the plate.
6. Remove the front panel [D] from the stays (x 6).
7. Remove the old belt [E] from the bottom, center, then the top.

NOTE: 1) Make sure the ribbed side of the new belt and pawl [F] are facing down.
2) Make sure the new belt is engaged at all three rollers.

Downloaded from www.Manualslib.com manuals search engine

3.4 JOGGER FENCE

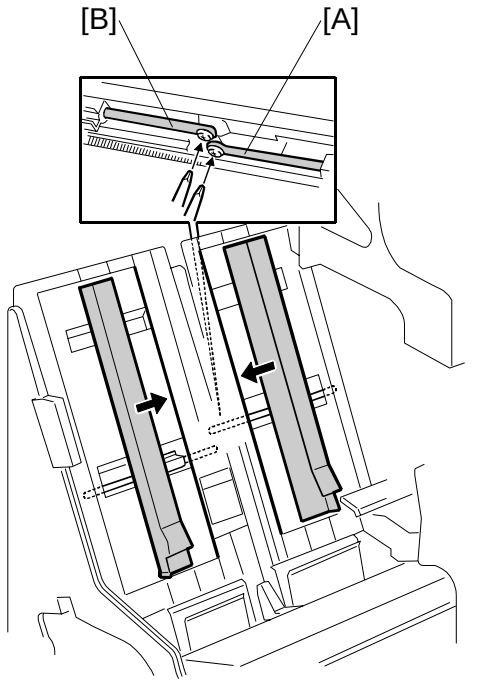

B478R525.WMF

1. Open the front door.
2. Pull out the jogger and stapler unit.
3. Push both fences to the center.
4. Remove the left jogger fence [A] (x 1)
5. Remove the right jogger fence [B] (x 1).
   NOTE: If the screws are difficult to remove or re-attach, remove the jogger fence belt and spring plate.

Downloaded from www.Manualslib.com manuals search engine

3.5 SENSORS

3.5.1 STACK HEIGHT 1, 2 AND EXIT GUIDE OPEN SENSOR

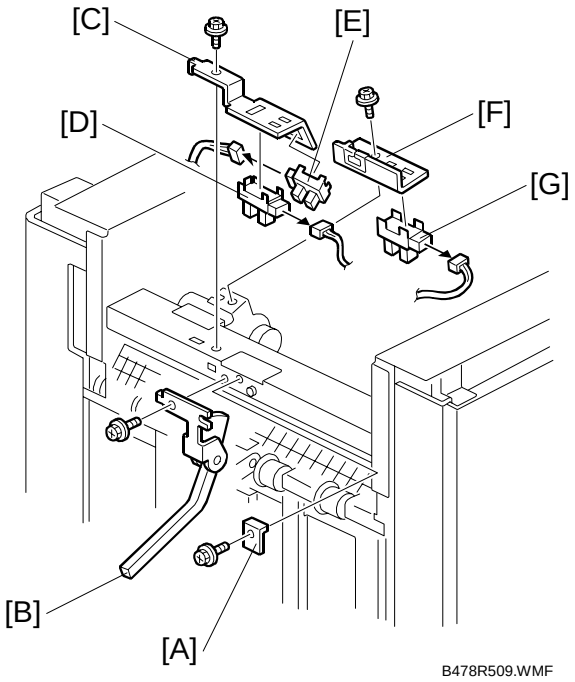

Stack Height Sensors 1 and 2

1. Remove the top cover. (☛ 3.71)
2. Remove the left upper panel and left upper cover (☞ x 2, ☜ x 2).
3. Remove the protector plate [A] (☞ x 1).
4. Remove the sensor feeler [B] (☞ x 1).
5. Remove the sensor bracket [C] (☞ x 1).
6. Replace the stack height sensor 1 [D] (☜ x 1) or 2 [E] (☜ x 1).

Exit Guide Open Sensor

1. Remove the sensor bracket [F] (☞ x 1).
2. Replace the exit guide open sensor [G] (☜ x 1).

Downloaded from www.Manualslib.com manuals search engine

3.5.2 UPPER TRAY PAPER LIMIT AND EXIT SENSOR

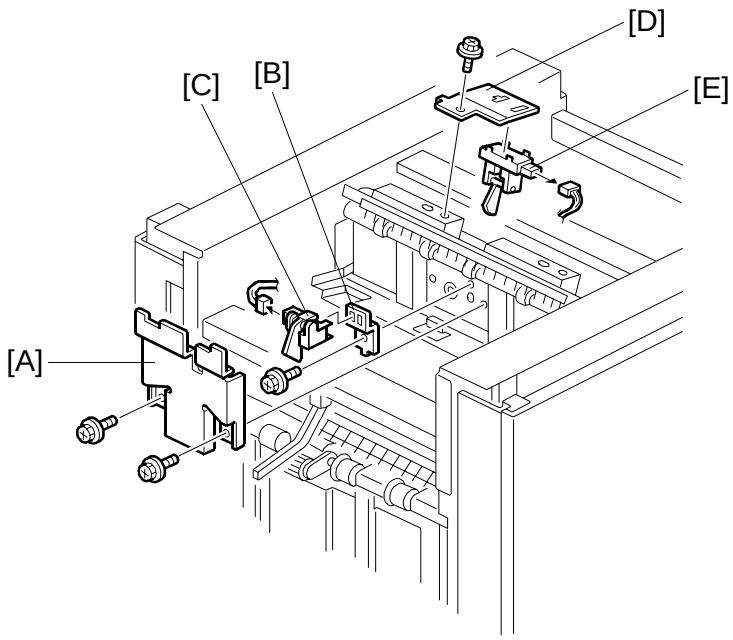

B478R510.WMF

Upper Tray Paper Limit Sensor

1. Remove the top cover.
2. Remove the sensor cover [A] (☞ x 2).
3. Remove the sensor bracket [B] (☞ x 1).
4. Replace the upper tray paper limit sensor [C] (☞ x 1).

Upper Tray Exit Sensor

5. Remove the sensor bracket [D] (☞ x 1).
6. Replace the upper tray exit sensor [E] (☞ x 1).

Downloaded from www.Manualslib.com manuals search engine

3.5.3 SHIFT TRAY EXIT SENSOR

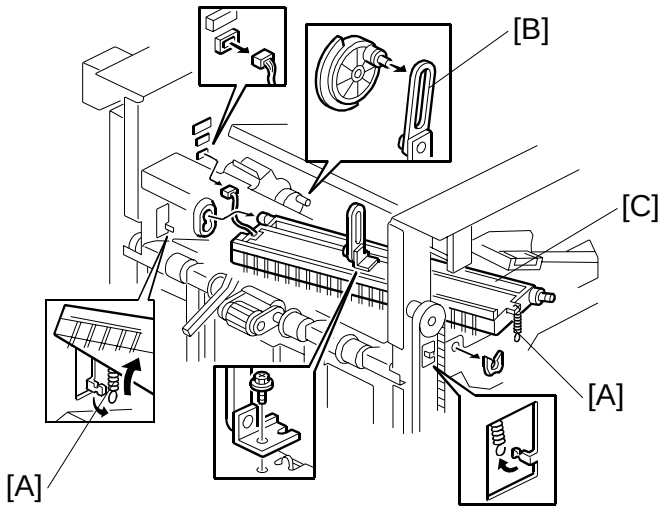

B478R511.WMF

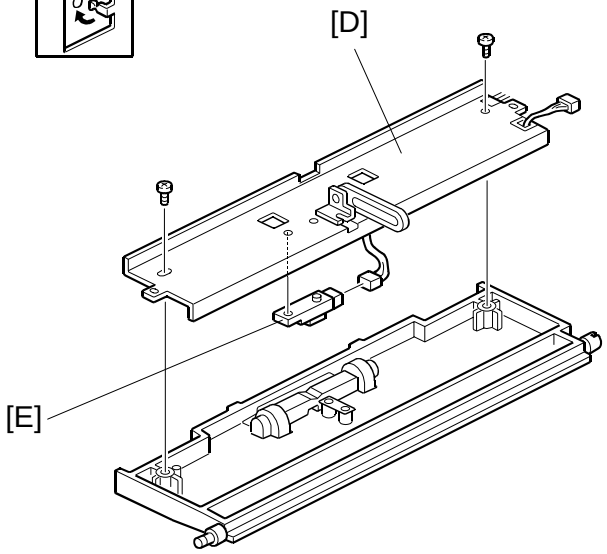

B478R512.WMF

1. Remove the top cover.
2. Open the front door.
3. Remove the inner cover.
4. Release the upper exit guide springs [A] (x 2).
5. Disconnect the link [B] from the cam (x 1).
6. Remove the upper exit guide [C] (x 1, x 1).
7. Remove the guide stay [D] (x 2).
8. Replace the shift tray exit sensor [E] (x 1) (x 1).

Downloaded from www.Manualslib.com manuals search engine

3.5.4 ENTRANCE AND STAPLER TRAY ENTRANCE SENSORS

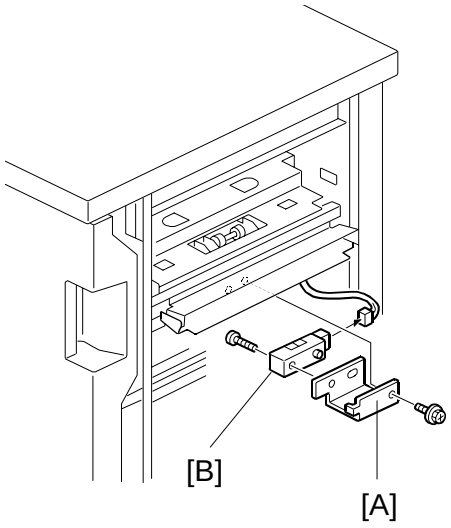

B478R513.WMF

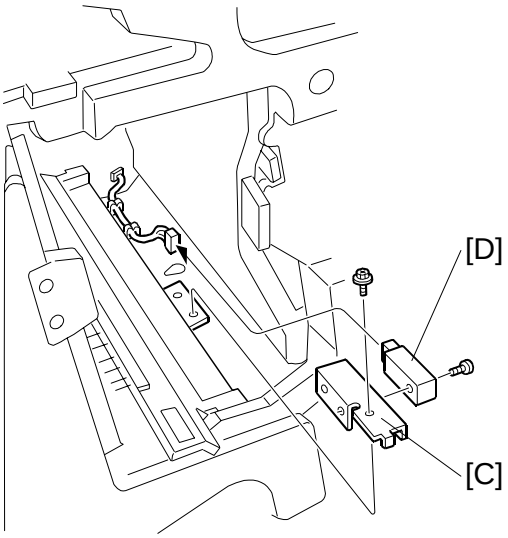

B478R514.WMF

Entrance Sensor

1. Disconnect the finisher from the copier.
2. Remove the sensor bracket [A] (x 1).
3. Replace the entrance sensor [B] (x 1) (x 1).

Stapler Tray Entrance Sensor

1. Open the front door.
2. Remove the sensor bracket [C] (x 1).
3. Replace the stapler tray entrance sensor [D] (x 1)(x 1).

Downloaded from www.Manualslib.com manuals search engine

3.5.5 PRE-STACK PAPER SENSOR

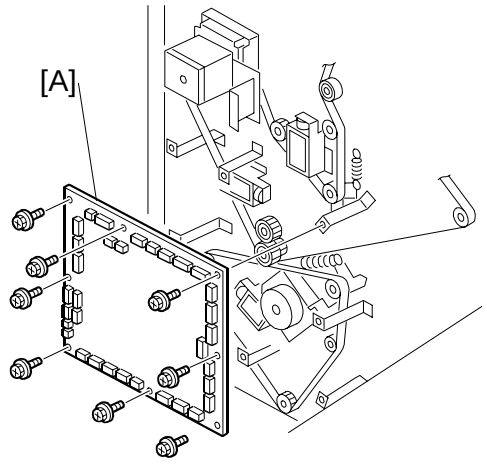

B478R521.WMF

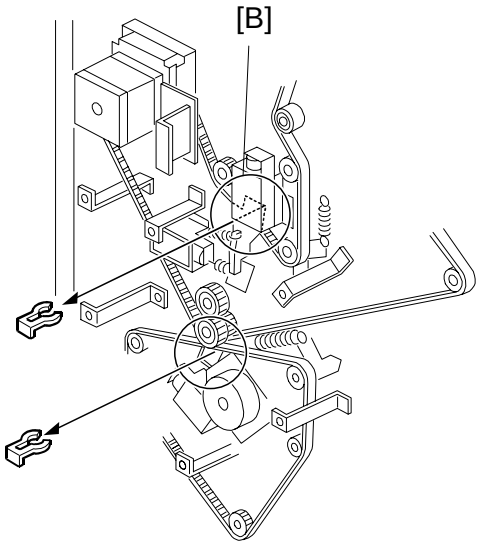

B478R515.WMF

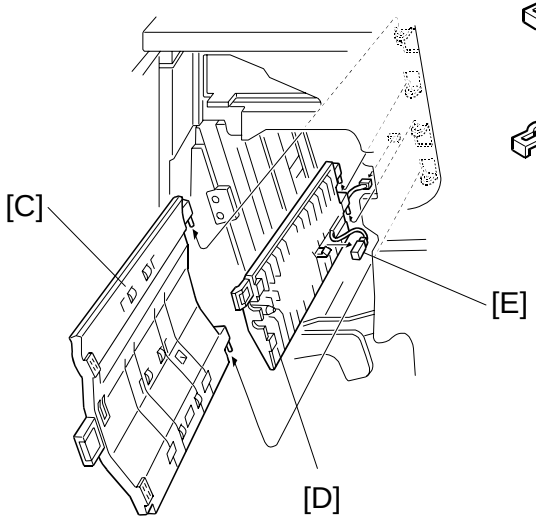

B478R516.WMF

1. Remove the rear cover.
2. Remove the main board [A] (x 8, x all).
3. Release the guide [B] (x 2).
4. Open the front door.
5. Remove the left vertical transport guide [C].
6. Remove the middle vertical transport guide [D] (x 1).
7. Replace the pre-stack paper sensor [E] (x 1).

Downloaded from www.Manualslib.com manuals search engine

3.5.6 STAPLE WASTE HOPPER SENSOR

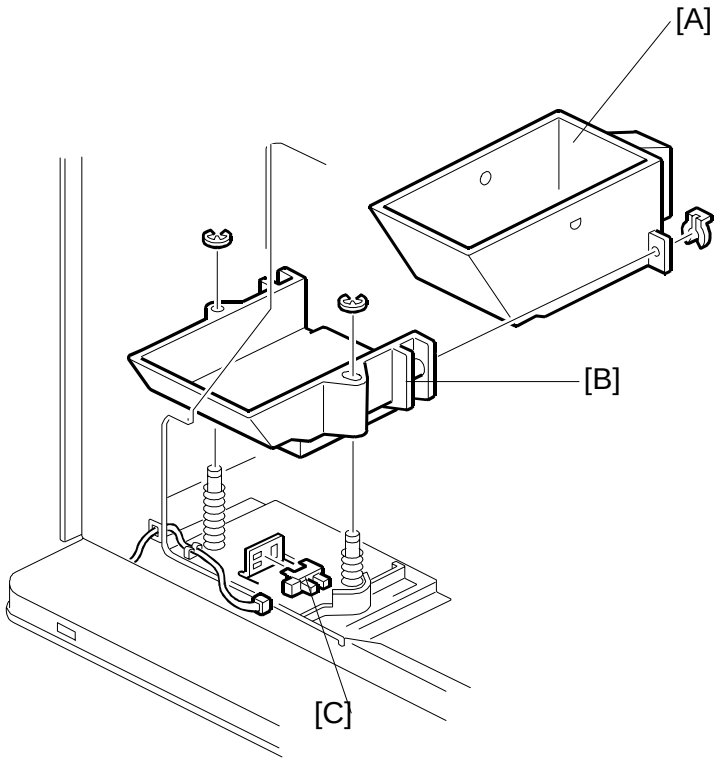

B478R517.WMF

1. Open the front door, pull out the stapler unit, then remove the rear cover.
2. Remove the rear cover (x 2).
3. Remove the staple waste hopper [A] (x 1).
4. Remove the hopper holder [B] (x 2).
5. Replace the staple waste hopper sensor [C] (x 1).

Downloaded from www.Manualslib.com manuals search engine

3.5.7 STAPLER ROTATION HP AND STAPLER RETURN SENSORS

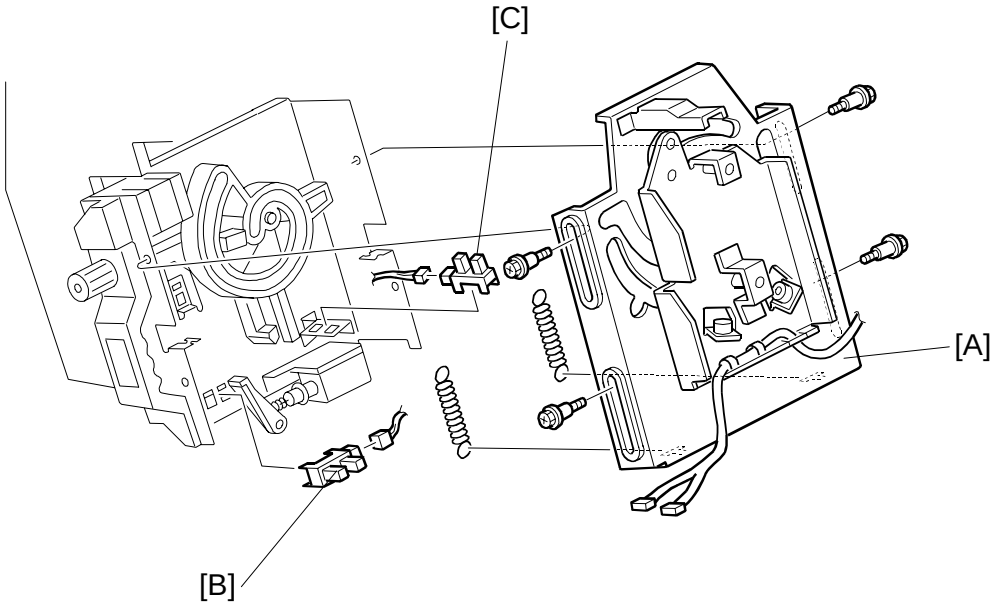

B478R519.WMF

1. Remove the stapler unit. (See next page.)
2. Remove the stapler mount bracket [A] (☞ x 4) (Springs x 2).
3. Replace the stapler rotation HP sensor [B] (☞ x 1).
4. Replace the stapler return sensor [C] (☞ x 1).

Downloaded from www.Manualslib.com manuals search engine

3.6 STAPLER

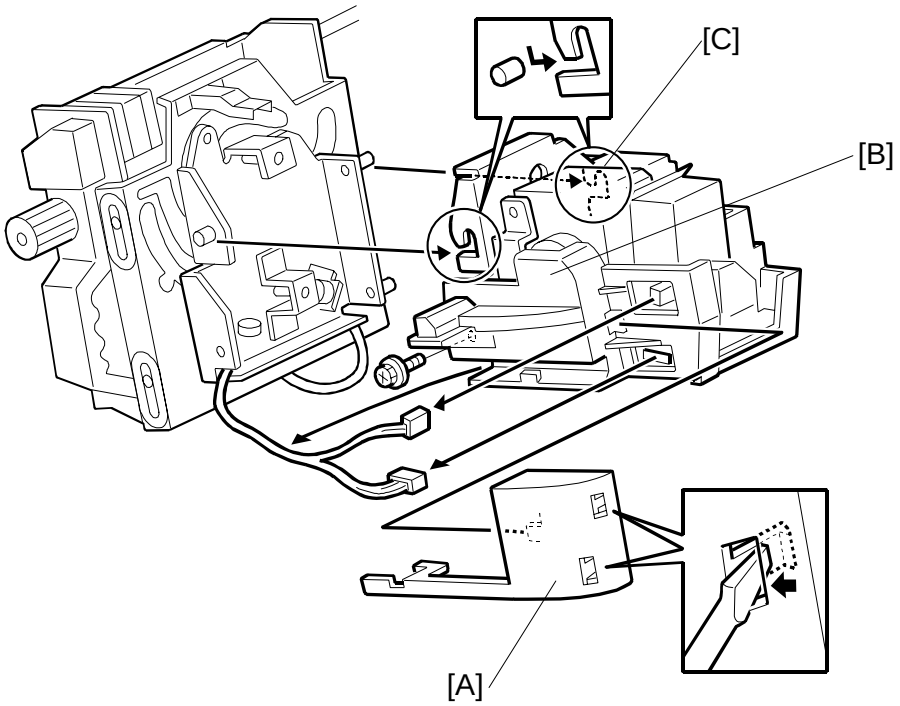

B478R518.WMF

1. Open the front door and pull out the staple tray.
2. Remove the stapler unit harness cover [A].
3. Remove the stapler cover [B] (x 1, x 2).
4. Lift the stapler off of the pegs. [C]

Downloaded from www.Manualslib.com manuals search engine

3.7 SHIFT TRAY MOTOR

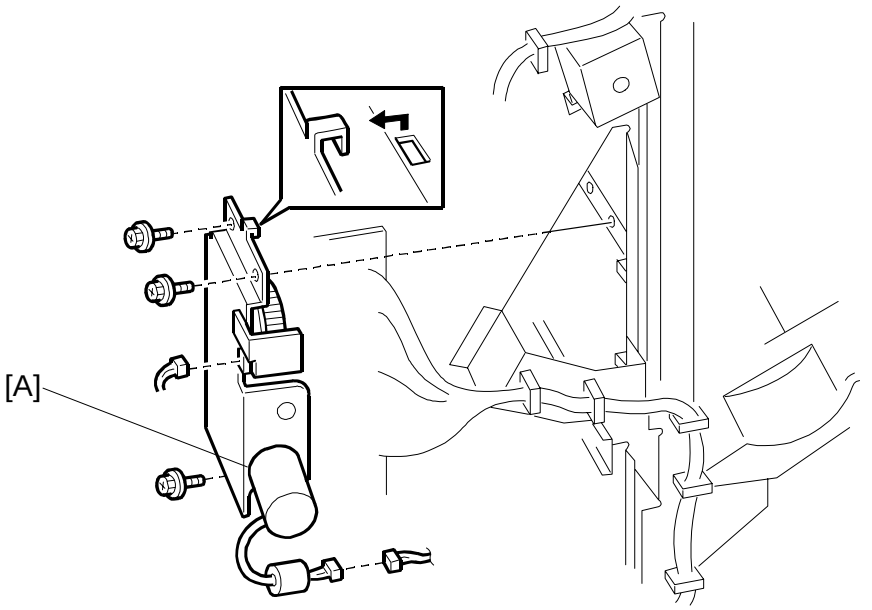

1. Remove the front door and rear cover (☛ 3.1).
2. Shift motor [A] (✋ x 2, 🔧 x 3)

Downloaded from www.Manualslib.com manuals search engine

3.7.1 STACKING ROLLE / ROLLER DRAG MOTORS, RETURN HP SENSOR

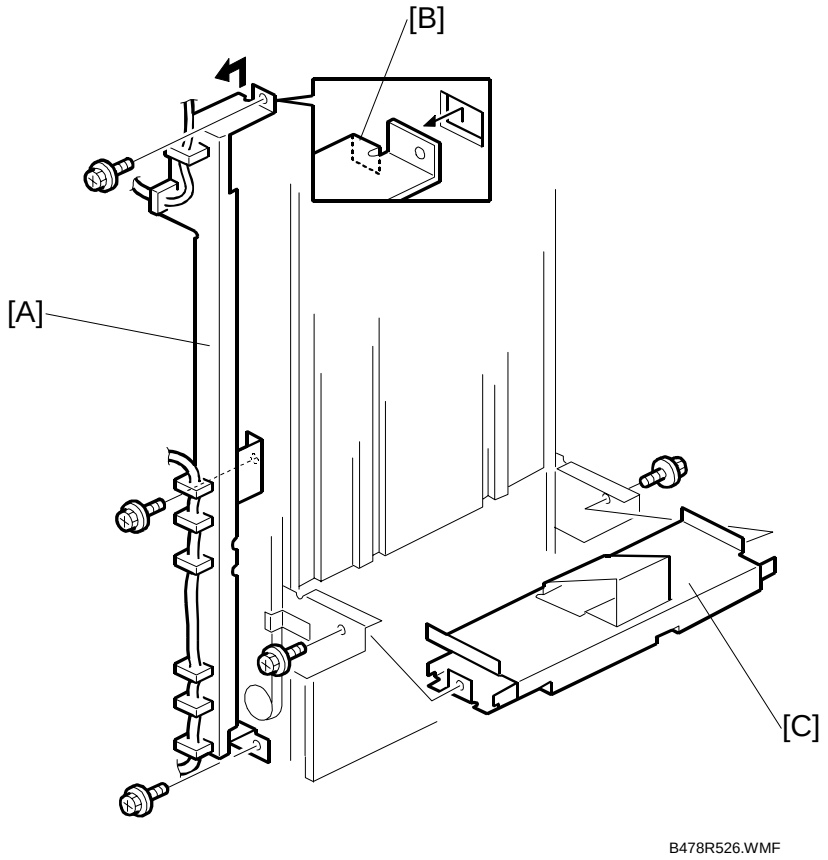

1. Do the procedures to remove the front door and all covers, with the exception of the left lower cover and top cover (labeled [C]: and [E]).
   NOTE: Be sure to lower the shift tray by pulling the gear toward you. The shift tray must be down.
2. Remove the tray shift motor. (☛ 3.7)
3. Remove the left stay [A] (x 3)
4. Unhook the stay at top [B].
5. Remove the shift tray mounting plate [C] (x 2).

Downloaded from www.Manualslib.com manuals search engine

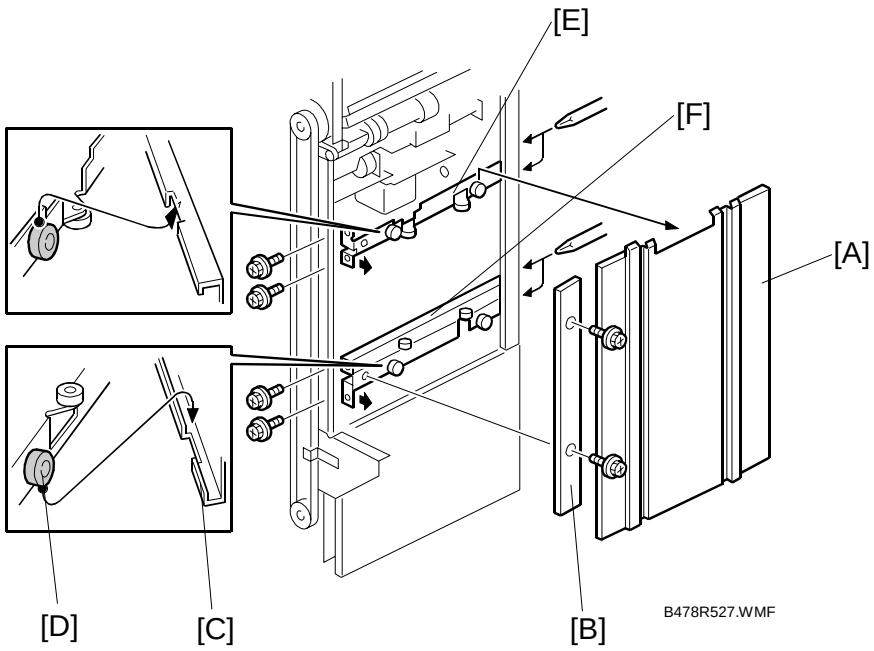

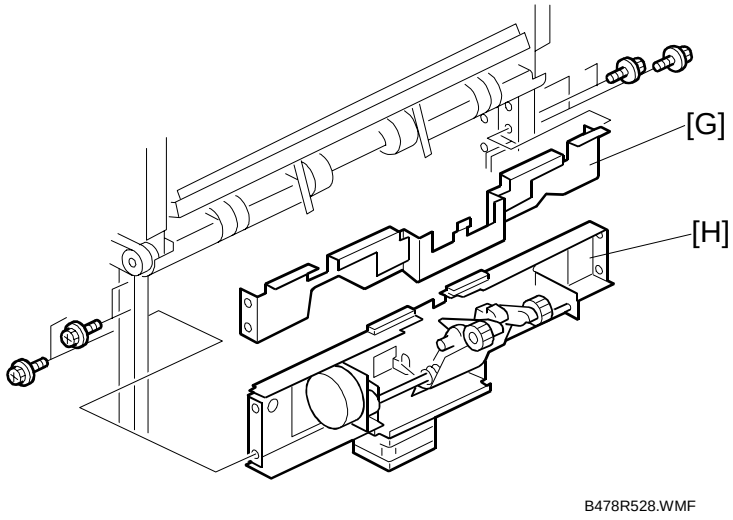

6. Remove the end fence [A] and plate [B] (🔩 x 2).
7. Disengage the end fence races [C] from the rollers [D] behind the fence.
8. Remove the upper stay [E] (🔩 x 4).
9. Remove the lower stay [F] (🔩 x 4).
10. Remove the cover [G] (🔩 x 4).
11. Remove the stacking roller/drag motor stay [H] (🤚 x 3, 🔩 x4).
    NOTE: Make sure the motor and sensor connectors are disconnected before removing.

Downloaded from www.Manualslib.com manuals search engine

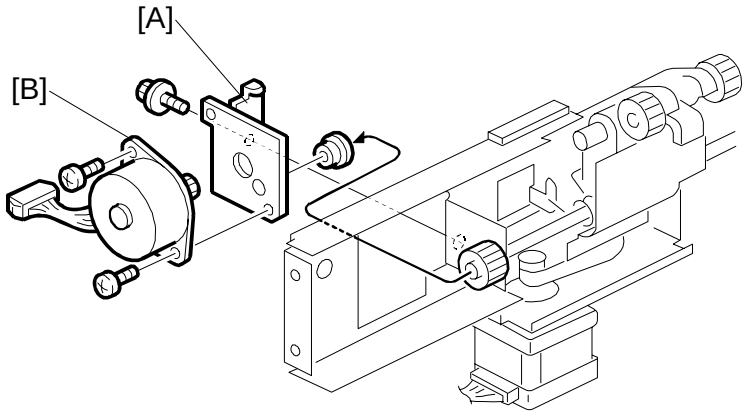

B478R530.WMF

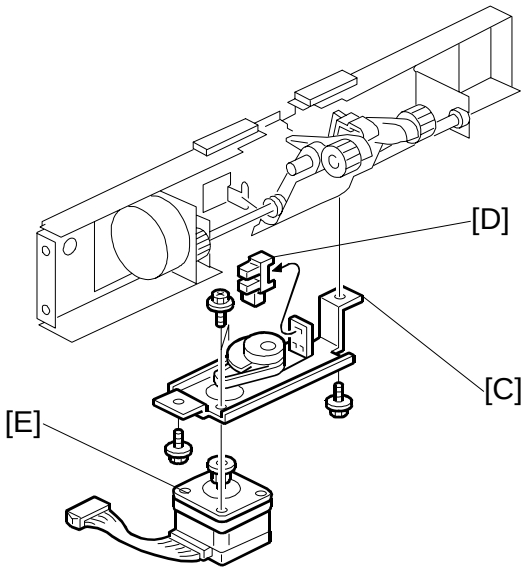

B478R529.WMF

12. Remove the stacking motor bracket [A] (bushing x 1, x 1).
13. Remove the stacking motor [B] (x 2).
14. Remove the roller drag motor bracket [C] (x 2).
15. Remove return HP sensor [D].
16. Remove the roller drag motor [E] (x 1).

Downloaded from www.Manualslib.com manuals search engine

3.8 Z-FOLD JOGGER UNIT

3.8.1 Z-FOLD JOGGER UNIT COVER

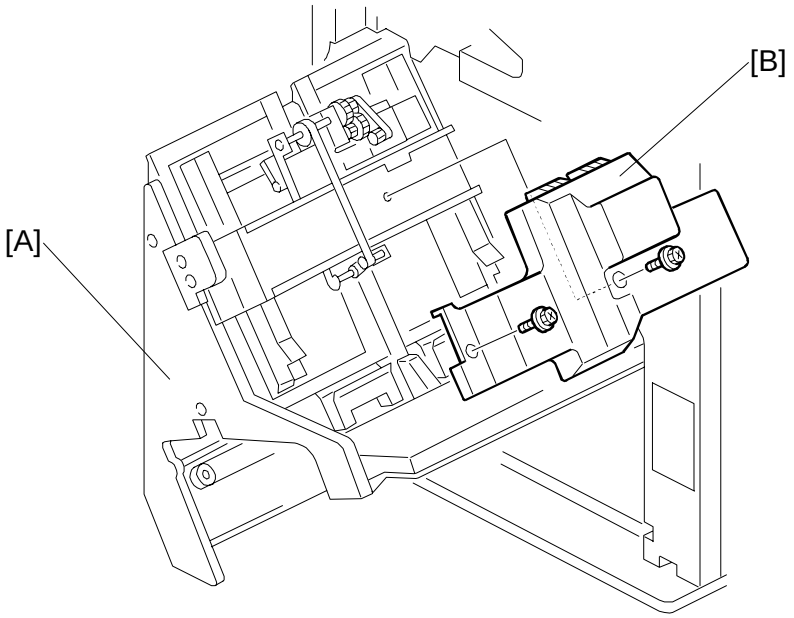

B706R101.WMF

1. Open the front door.
2. Pull out the stapler tray unit [A].
3. Remove the Z-fold jogger unit cover [B] (🖉 x 2).

Downloaded from www.Manualslib.com manuals search engine

3.8.2 Z-FOLD JOGGER UNIT

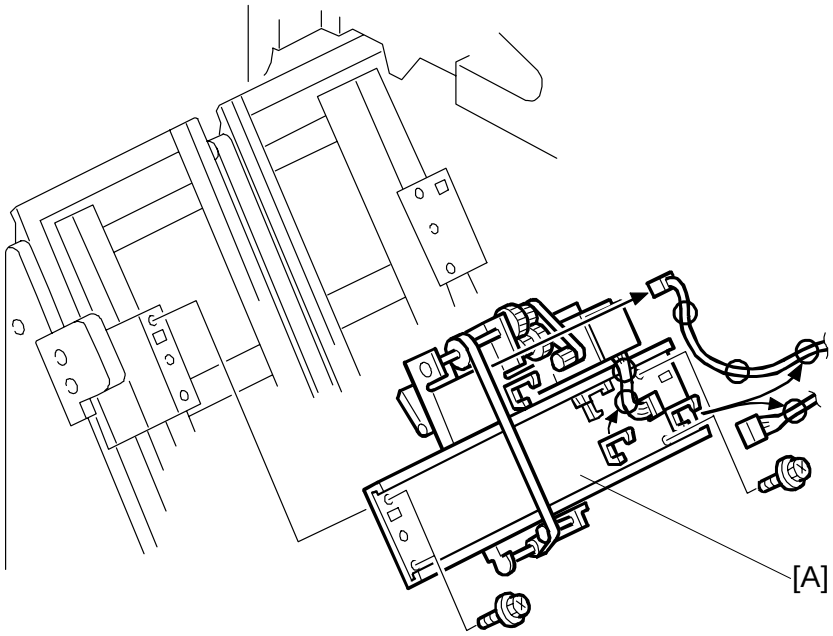

B706R103.WMF

1. Open the front door and pull out the stapler tray unit.
2. Remove the Z-fold jogger unit cover (x 2).
3. Remove the Z-fold jogger unit [A] (x 4, x 4, x 2).

Downloaded from www.Manualslib.com manuals search engine

3.8.3 JOGGER TOP FENCE MOTOR

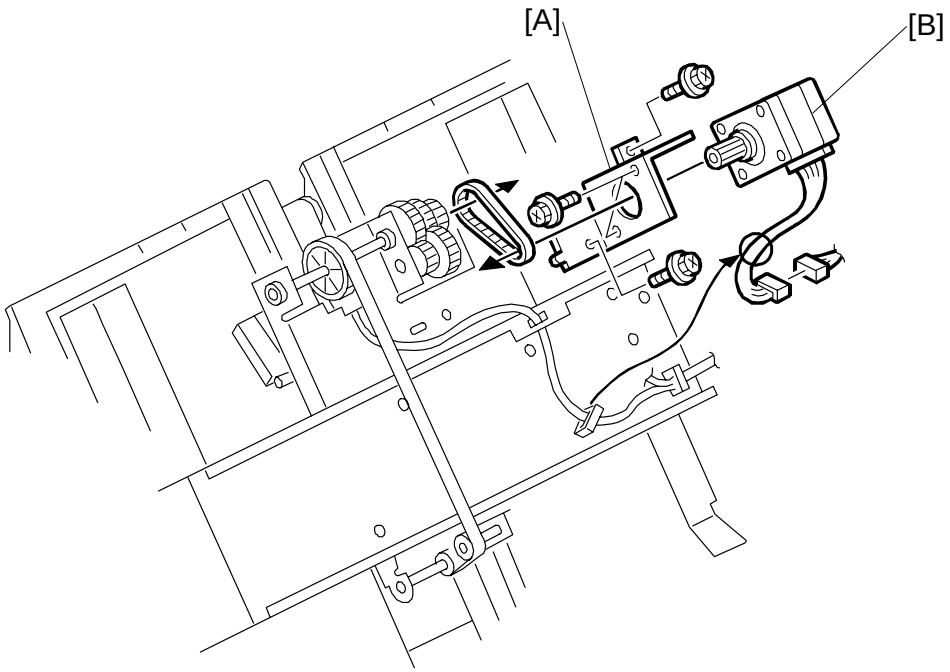

B706R102.WMF

1. Open the front door and pull out the stapler tray unit.
2. Remove the Z-fold jogger unit cover (x 2).
3. Remove the motor bracket [A] (x 2, timing belt x 1).
4. Remove the jogger top fence motor [B] (x 2, x 1, x 1).

Downloaded from www.Manualslib.com manuals search engine

3.8.4 JOGGER BOTTOM FENCE MOTOR

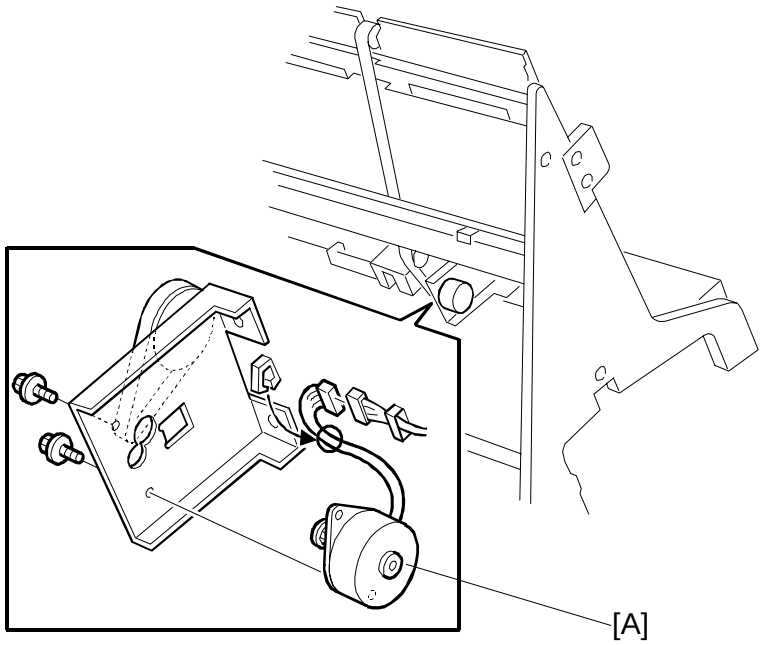

B706R104.WMF

1. Open the front door and pull out the stapler tray unit.
2. Remove the jogger bottom fence motor [A] (x 2, timing belt x 1, x 1, x 1).

Downloaded from www.Manualslib.com manuals search engine

3.9 PUNCH UNIT (B531)

3.9.1 PUNCH POSITION ADJUSTMENT

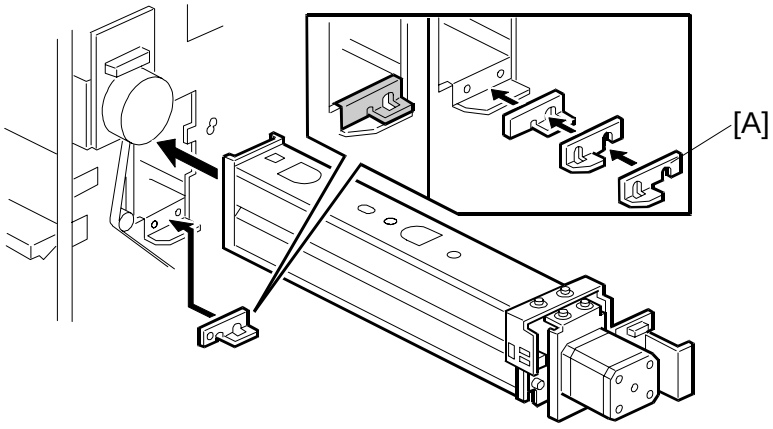

B531R101.WMF

The position of the punched holes can be adjusted in two ways.

Front to Rear Adjustment

Three spacers [A] are provided with the punch unit for manual adjustment of the hole position in the main scan direction:

- 2 mm (x 1)
- 1 mm (x 2)

NOTE: One spacer was installed at installation and the remaining spacers were fastened with a screw to the rear frame of the finisher under the rear cover and slightly above the lock bar.

Right to Left Adjustment

The position of the punched holes can be adjusted right to left in the sub scan direction with SP6-113 Punch Hole Position Adjustment. The position can be adjusted in the range ±7.5 mm in 0.5 mm steps. The default setting is 0.

Press the [•/×] key to toggle the ± selection. A +VE value shifts the punch holes left toward the edge of the paper, and a -VE value shifts the holes right away from the edge.

Downloaded from www.Manualslib.com manuals search engine

3.10 JOGGER UNIT (B513)

3.10.1 JOGGER UNIT

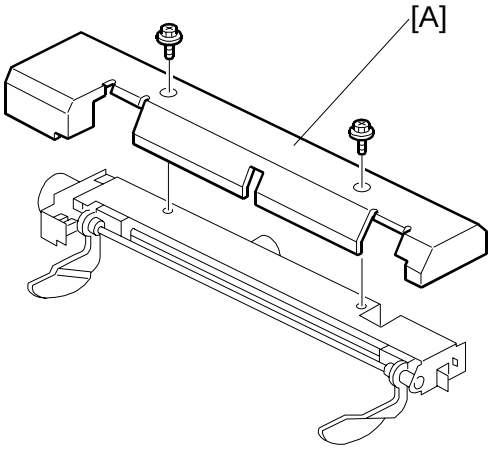

B513I002.WMF

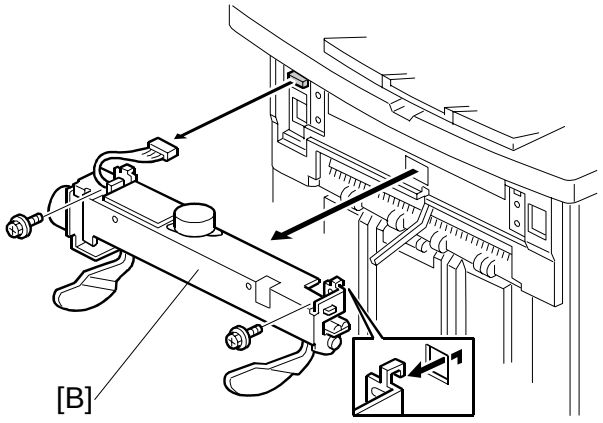

B513R003.WMF

4. Remove the jogger unit cover [A] (x 2).
5. Remove the jogger unit [B] (x 2, x 1).

Downloaded from www.Manualslib.com manuals search engine

3.10.2 JOGGER UNIT PCB

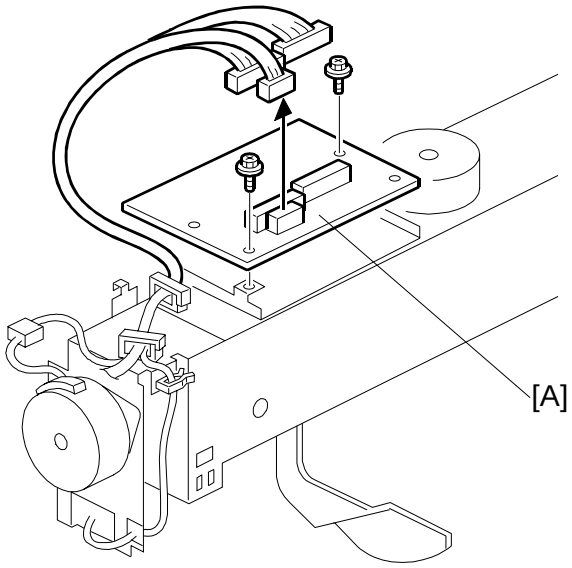

B513R001.WMF

1. Remove the jogger unit from the finisher. (☛ 3.10.1)
2. Remove the jogger unit control PCB [A] (🔩 x 2, 🖐 x 3)

Downloaded from www.Manualslib.com manuals search engine

3.10.3 JOGGER UNIT MOTOR

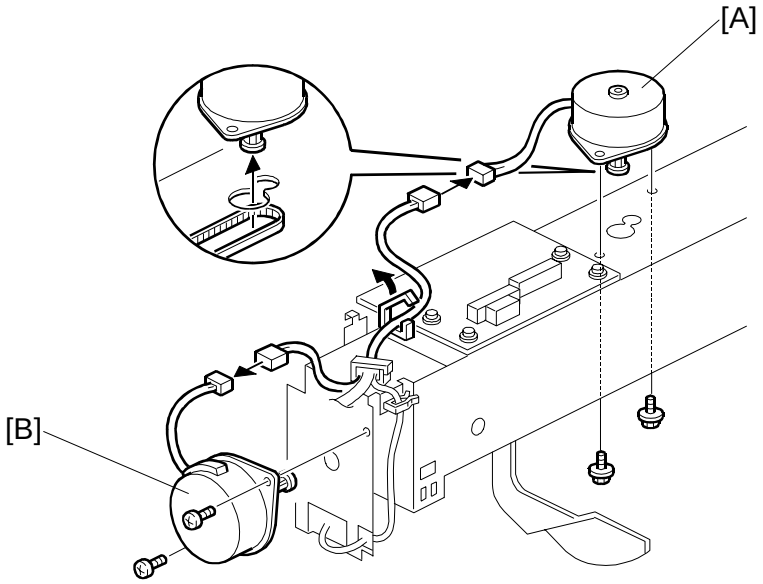

B513R002.WMF

1. Remove the jogger unit from the finisher. (☛ 3.10.1)
2. Remove the shift jogger motor [A] (🔩 x 2, ✋ x 1).
3. Remove the shift jogger lift motor [B] (🔩 x 2, ✋ x 1).

Downloaded from www.Manualslib.com manuals search engine

4. TROUBLESHOOTING

If the machine logs an SC code in the display of the operation panel, see “Section 4 Troubleshooting” of the Service Manual. Section 4 contains a complete list of all service codes and how to troubleshoot the problem.

Downloaded from www.Manualslib.com manuals search engine

5. SERVICE TABLES

For details about 3000-Sheet Finisher B706 SP codes, please refer to “5. Service Tables” in the main machine service manual.

5.1 DIP SWITCHES

DPS100				Description
1	2	3	4	
0	0	0	0	Default
0	0	1	0	Free run: A4 LEF, staple mode
0	0	0	1	Free run: staple and tray shift

NOTE: Do not use any other settings.

5.2 TEST POINTS

No.	Label	Monitored Signal
TP100	(5V)	+5 V
TP101	(GND)	Ground
TP102	(RXD)	RXD
TP103	(TXD)	TXD

5.3 FUSES

No.	Function
FU100	Protects 24 V.

Downloaded from www.Manualslib.com manuals search engine

6. DETAILS

6.1 TRAY AND STAPLER JUNCTION GATE

Upper Tray Mode

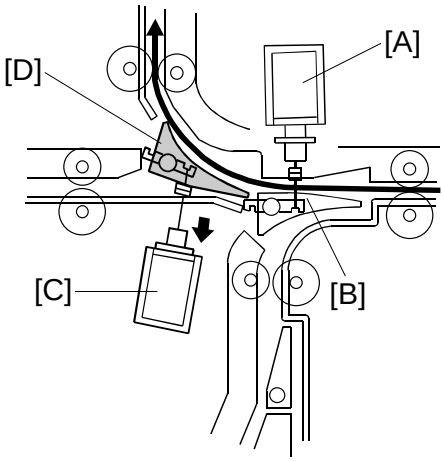

B478D506.WMF

Sort/Stack Mode

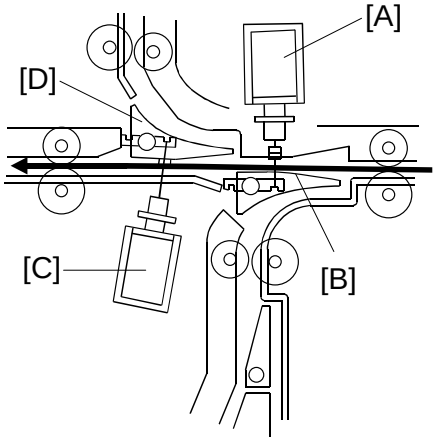

B478D505.WMF

Staple Mode

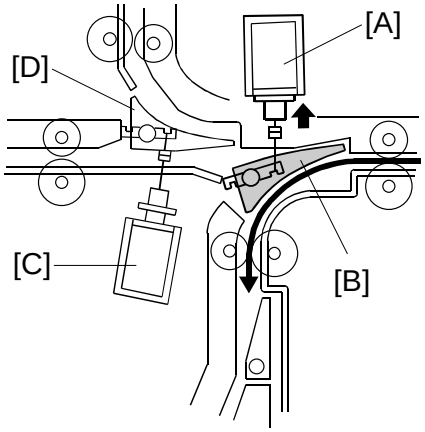

B478D507.WMF

Depending on the finishing mode, the copies are directed up, straight through, or down by the combinations of open and closed junction gates.

Solenoid/Gate		Selected Operation Mode		
		Upper Tray	Sort/Stack	Staple
[A]	Stapler junction gate solenoid	Off	Off	ON
[B]	Stapler junction gate	Closed	Closed	OPEN
[C]	Tray junction gate solenoid	ON	Off	Off
[D]	Tray junction gate	OPEN	Closed	Closed

Downloaded from www.Manualslib.com manuals search engine

6.2 PAPER PRE-STACKING

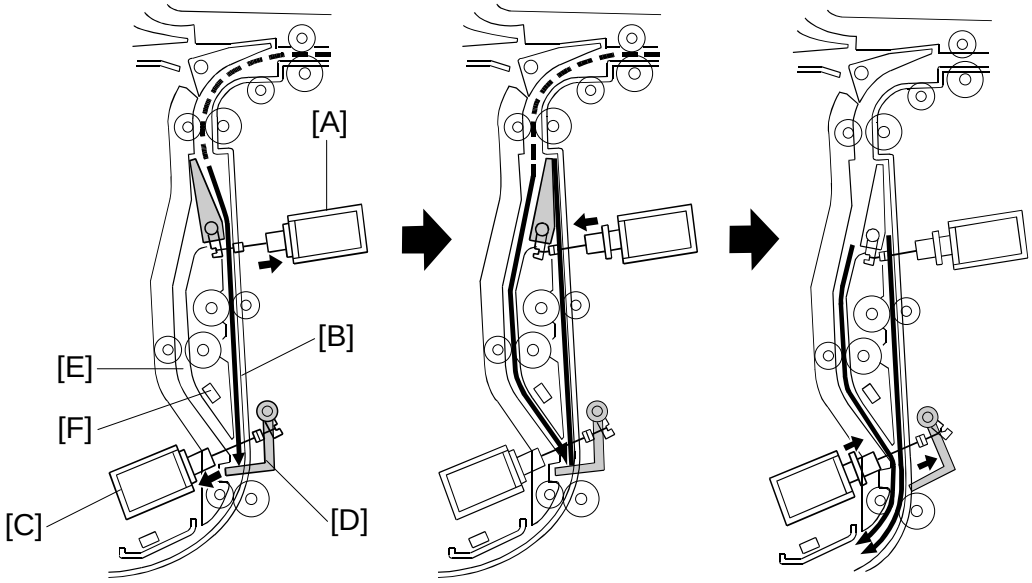

B478D000.WMF

This mechanism improves productivity in staple mode. It is only used when copying on A4, LT, or B5 (all LEF).

During stapling, the copier has to wait. This mechanism reduces the wait by holding the first two sheets of a job while the previous job is still being stapled. It only works during the second and subsequent sets of a multi-set copy job.

The pre-stack junction gate solenoid [A] turns on 120 mm after the 1st sheet of paper turns on the entrance sensor, and this directs the sheet to the pre-stack tray [B]. (This sheet cannot be fed to the stapler yet, because the first set is still being stapled.) The pre-stack paper stopper solenoid [C] turns on 350 mm after the 1st sheet turns on the entrance sensor. The pre-stack paper stopper [D] then stops the paper.

The pre-stack junction gate solenoid turns off 230 mm after the trailing edge of the 1st sheet passes through the entrance sensor, and the 2nd sheet is sent to the paper guide [E]. The pre-stack paper stopper is released about 40 mm after the 2nd sheet turns on the pre-stack stopper sensor [F], and the two sheets of copy paper are sent to the stapler tray. All sheets after the 2nd sheet go to the stapler tray via the paper guide [E].

Downloaded from www.Manualslib.com manuals search engine

6.3 JOGGER UNIT PAPER POSITIONING

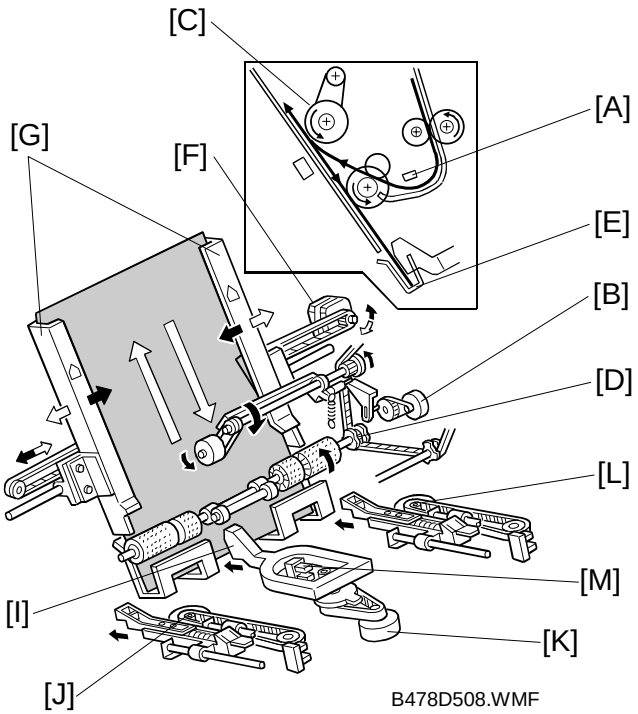

In the staple mode, as every sheet of paper arrives in the jogger unit, it is vertically and horizontally aligned, then the staple edge is pressed flat to ensure the edge of the stack is aligned correctly for stapling.

Vertical Paper Alignment: About 60 ms after the trailing edge of the copy passes the staple tray entrance sensor [A], the positioning roller motor [B] is energized to push the positioning roller [C] into contact with the paper. The positioning roller and alignment brush roller [D] rotate to push the paper back and align the trailing edge of the paper against the stack stopper [E].

Horizontal Paper Alignment: When the print key is pressed, the jogger motor [F] turns on and the jogger fences [G] move to the wait position about 7.2 mm wider than the selected paper size on both sides. When the trailing edge of the paper passes the staple unit entrance sensor, the jogger motor moves the jogger fences 3.7 mm towards the paper. Next, the jogger motor turns on again for 3.5 mm for the horizontal paper alignment then goes back to the wait position.

Paper Stack Correction: After the paper is aligned in the stapler tray, the left [J], center [K], and right [L] stack plate motors switch on briefly and drive the front stack, center stack, and rear stack plates against the edge of the stack to flatten the edge completely against the staple tray for stapling. When the next copy paper turns on the stapler entrance sensor, the stack plate motor turns on and returns to its home position. The home position is detected by stack plate HP sensor [M].

Downloaded from www.Manualslib.com manuals search engine

6.4 STAPLER UNIT MOVEMENT

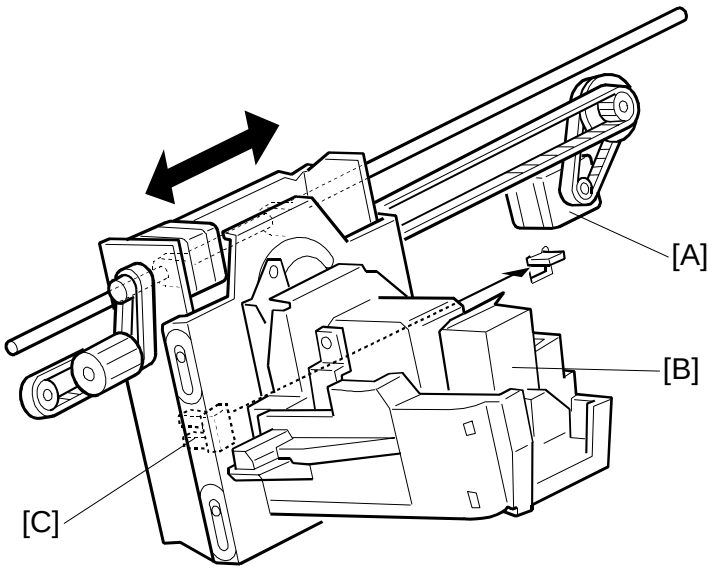

B478D513.WMF

Side-to-Side

The stapler motor [A] moves the stapler [B] from side to side. After the start key is pressed, the stapler moves from its home position to the stapling position.

If two-staple-position mode is selected, for the first stack the stapler moves to the rear stapling position first, staples, moves to the front position, staples and waits at the front. For the second stack, the stapler staples the front corner first, then moves to the rear corner and staples.

NOTE: For continuous stapling jobs, the corners are stapled rear then front for the odd number stacks and stapled front then rear for even number stacks.

After the job is completed, the stapler returns to its home position. This is detected by the stapler HP sensor [C].

Downloaded from www.Manualslib.com manuals search engine

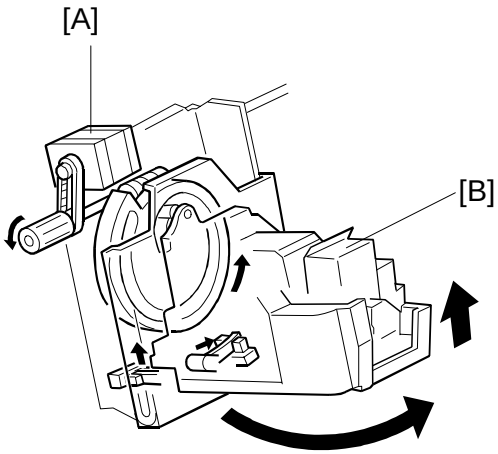

B478D514.WMF

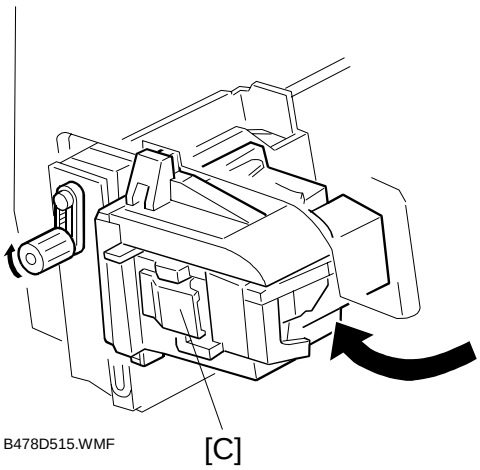

B478D515.WMF

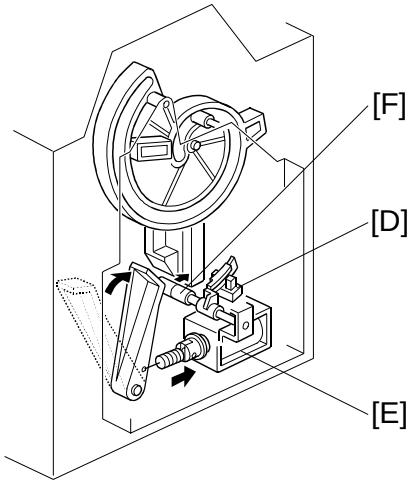

B478D523.WMF

Rotation (1)

In the oblique staple position mode, the stapler rotation motor [A] rotates the stapler units [B] 45° to counterclockwise after it moves to the stapling position.

Rotation (2)

When the staple end condition arises, the stapler motor moves the stapler to the front and the stapler rotation motor rotates the stapler unit to clockwise to remove the staple cartridge [C]. This allows the user to add new staples.

Once the staples have been installed, and the front door closed, the stapler unit returns to its home position. As the stapler unit is returning to the home position, the stapler return sensor [D] is activated, the return solenoid [E] turns on and it assists the guide roller [F] to return to its guide (this guide directs the stapler during rotation).

Downloaded from www.Manualslib.com manuals search engine

6.5 STAPLER

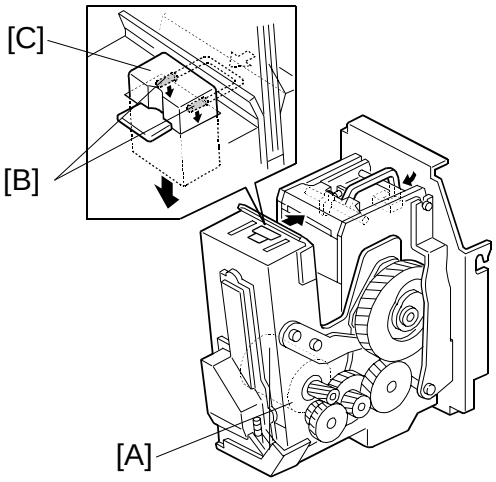

B478D516.WMF

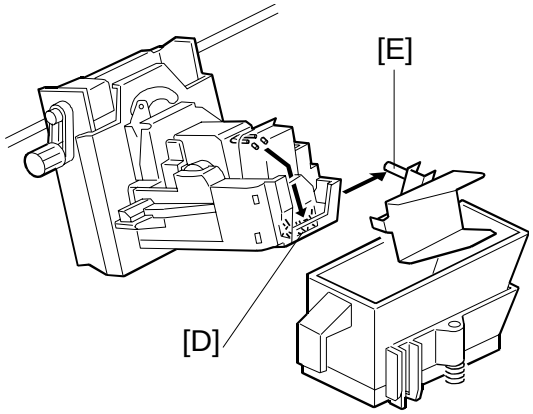

B478D521.WMF

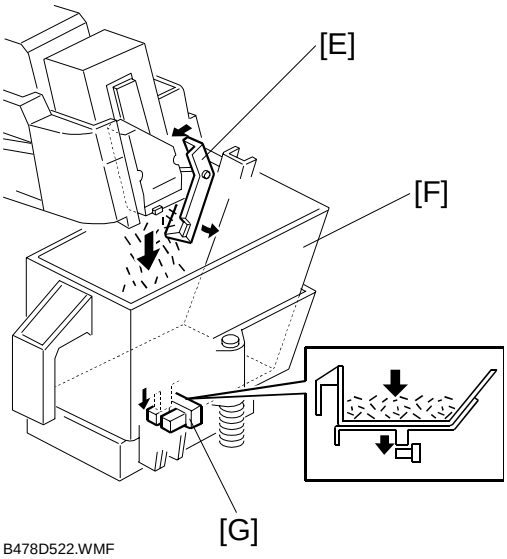

B478D522.WMF

When the aligned copies are brought to the stapling position by the positioning roller and jogger fences, the staple hammer motor [A] starts stapling.

During stapling, the stapler trims off the excess length [B] of the staples by lowering the cutter [C]. This excess length depends on the number of copies in the set; there will be very little for a stack containing 100 sheets. The staple waste drops into the tray [D] in the stapler. When the stapler unit returns to its home position, the tray hits the shaft [E] and the tray opens. The staple waste drops into the staple waste hopper [F]. When the staple waste hopper is full, the actuator on its base activates the staple waste hopper sensor [G]. An SC737 (Full Finisher Staple Waste Hopper) is displayed.

Downloaded from www.Manualslib.com manuals search engine

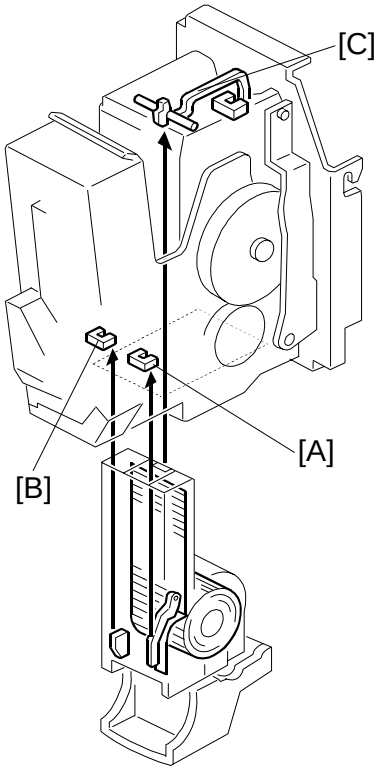

B478D517.WMF

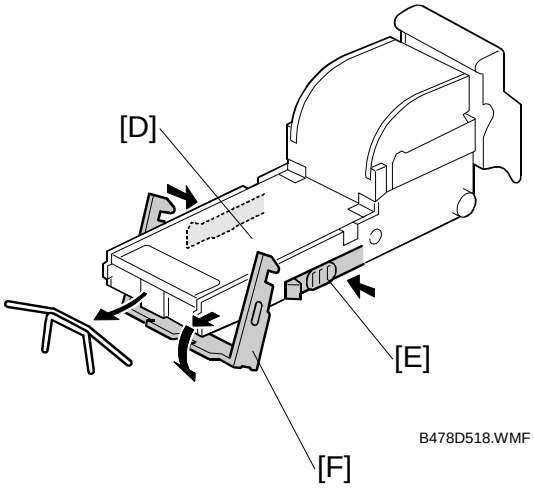

B478D518.WMF

The stapler has a staple end sensor [A], cartridge set sensor [B] and staple hammer HP sensor [C].

When a staple end or no cartridge condition is detected, a message is displayed advising the operator to install a staple cartridge. If this condition is detected during a copy job, the indication will appear, and the copy job will stop.

The staple cartridge has a clinch area [D] where jammed staples collect. The operator can remove the jammed staples from the clinch area by pressing in the releases [E] on both sides, then lowering the bracket lever [F].

Downloaded from www.Manualslib.com manuals search engine

6.6 FEED-OUT

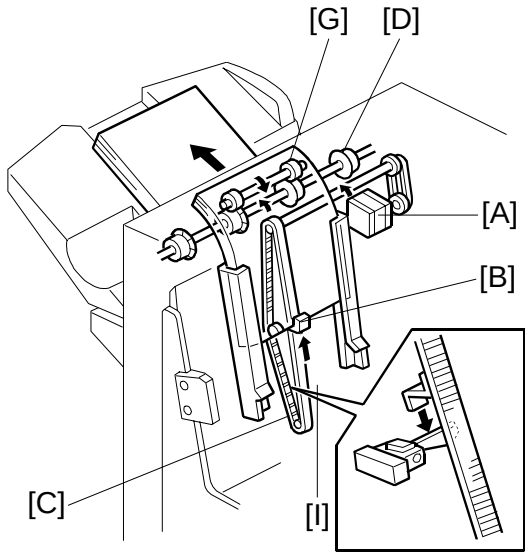

B478D519.WMF

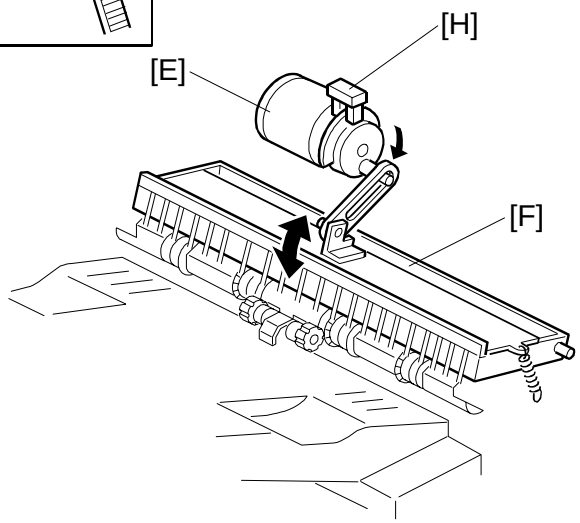

B478D512.WMF

After the copies have been stapled, the stack feed-out motor [A] starts. The pawl [B] on the stack feed-out belt [C] transports the set of stapled copies up and feeds it to the shift tray exit roller [D]. When stapling starts, the exit guide motor [E] opens the upper exit guide [F], which includes the upper shift tray exit roller [G], in order to feed out the leading edge of the copy set smoothly. The exit guide motor turns on again a certain time after stapling is complete, and the upper exit guide plate is lowered. Then the shift tray exit roller takes over the stack feed-out.

The on-off timing of the exit guide motor is detected by the exit guide open sensor [H].

The stack-feed-out motor turns off when the pawl actuates the stack feed-out belt home position sensor [I].

Downloaded from www.Manualslib.com manuals search engine

6.7 PAPER EXIT STACKING

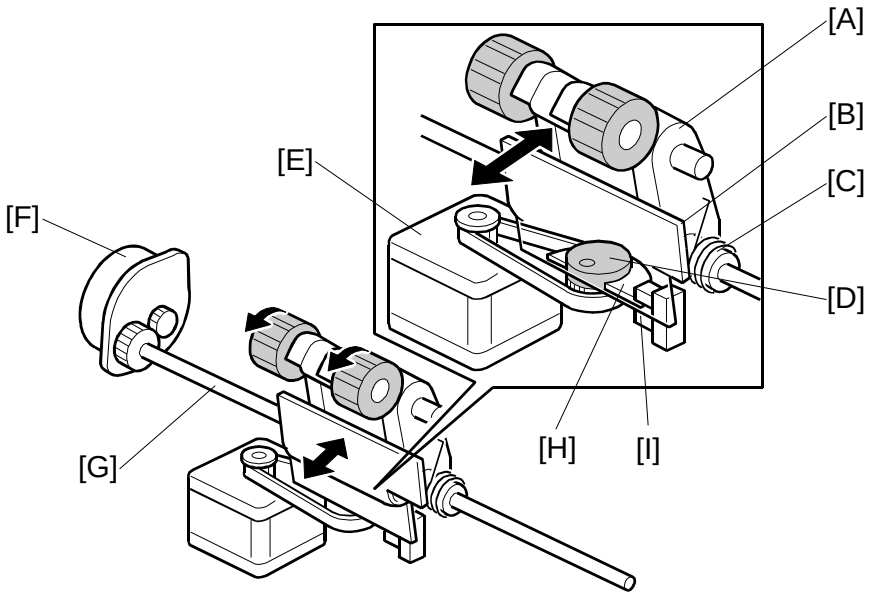

B478D524.WMF

The stacking roller assembly [A] is fastened to a plate [B] on a shaft by a spring [C]. The cam [D], in contact with the bottom of the plate, is connected to the stacking roller drag motor [E] via a timing belt.

The stacking roller drag motor and timing belt rotate the cam against the bottom of the plate to move the rollers forward and back with each sheet ejected onto the shift tray.

The stacking roller motor [F] drives the shaft [G] that rotates the stacking rollers counter-clockwise as the rollers move back. The simultaneous rotation and backward movement of the roller assembly pulls each sheet back toward the copier to align the edges of the stack on the shift tray.

The actuator [H] is mounted on the cam and rotating with both rotating clockwise) and detects the roller assembly home position when the actuator leaves the gap of the return drive HP sensor [I] and signals the machine that the rollers are at the home position. The machine uses this information to control paper feed timing and confirm that the mechanism is operating correctly. The cam and actuator make one complete rotation for every sheet fed out of the machine onto the shift tray.

Downloaded from www.Manualslib.com manuals search engine

6.8 SHIFT TRAY

6.8.1 OVERVIEW

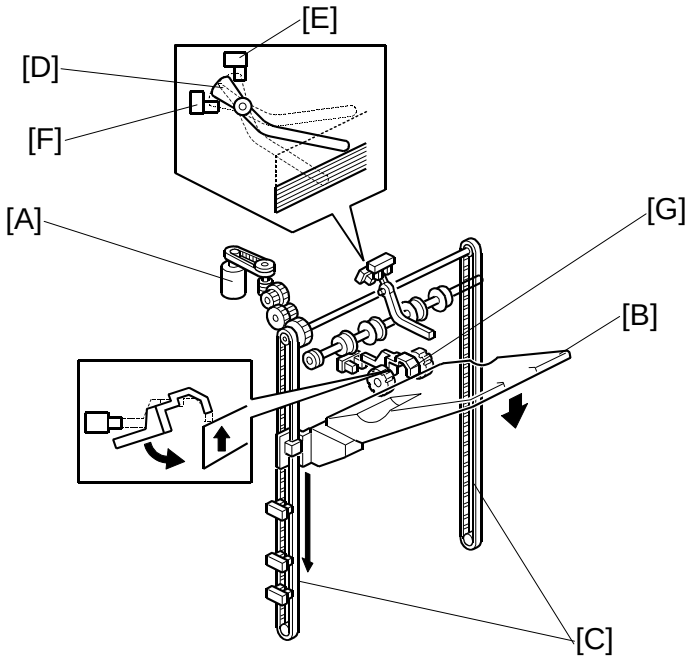

B478D010.WMF

The shift tray lift motor [A] controls the vertical position of the shift tray [B] through gears and timing belts [C].

Stand-by Mode

After the main switch is turned on, or when the stack is removed from the tray, the end of the feeler on the tray falls and its actuator [D] rotates up into staple mode HP sensor 2 [E] (S7) and switches it on. This switches on the lift motor, which raises the tray until the tray pushes the actuator out of the sensor [E]. Then, the lift motor stops the shift tray; this is the home position (the actuator [D] is between the two sensors [E] and [F].

The shift tray upper limit switch (SW1) prevents the drive gear from being damaged if staple mode HP sensor 2 [E] fails. In case of a failure, when the shift tray pushes up the actuator [G] and positioning rollers, the switch will cut the power to the shift tray lift motor.

Downloaded from www.Manualslib.com manuals search engine

6.8.2 SHIFT TRAY UP/DOWN MOVEMENT

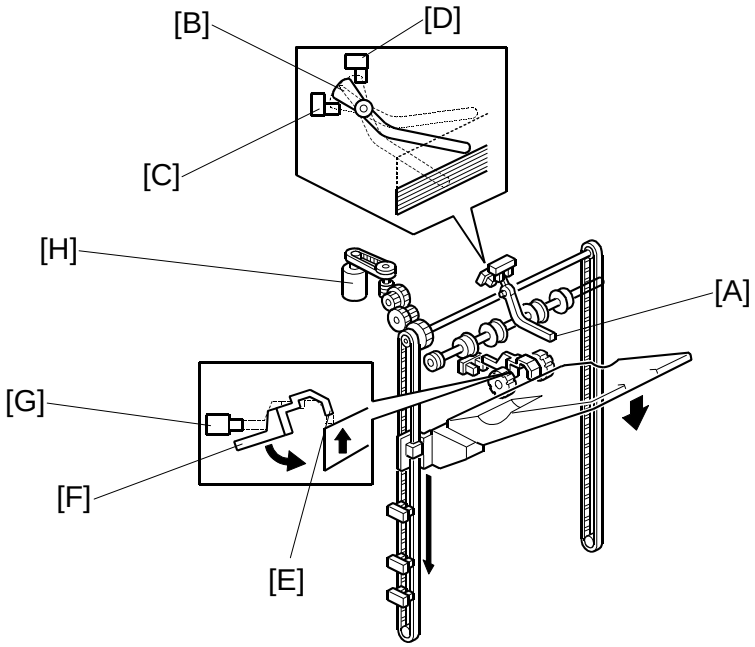

B478D010.WMF

Sort/Stack Mode (Shift Mode)

The shift tray moves to home position, which is when the actuator [F] has just exited the shift mode home position sensor [G] (S12). During feed-out, the tray is lowered automatically at prescribed intervals; sensor [D] (S7) is ignored. When the stack is removed from the tray, the end of the feeler [E] between the arms of the stacking roller falls, and its actuator [F] enters sensor [G] (S12) and switches it on. This switches on the lift motor [H], which raises the tray until the actuator leaves the sensor. Then, the lift motor stops the tray; this is the home position.

In sort/stack mode, if S12 fails when the tray is being lifted, the shift tray upper limit switch (SW1) prevents the drive gear from being damaged.

Staple Mode

The shift tray moves to home position, which is when the actuator [B] is between the staple mode home position sensors [C] and [D]. During feed-out, the shift tray is lowered automatically at prescribed intervals. When the stack is removed from the tray, the tray returns to the home position for stand-by mode. (☛6.8.1)

Downloaded from www.Manualslib.com manuals search engine

6.8.3 SHIFT TRAY LOWER LIMIT DETECTION

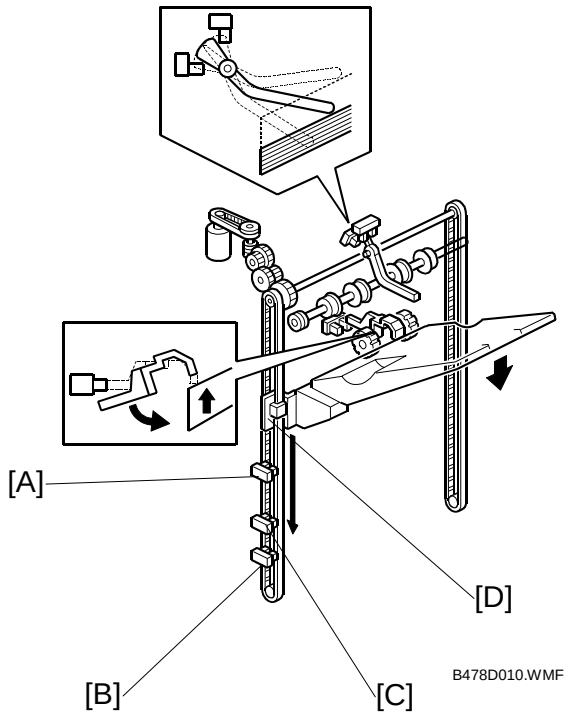

This machine has two shift tray lower limit sensors: shift lower limit sensor [A] (S9) for large paper (B4 and larger) and shift lower limit sensor [B] (S11) for small paper (smaller than B4).

NOTE: Sensor [C] (S10) is not used.

When the actuator [D] enters sensor [A] while using large paper (about 1500 sheets are on the tray), a message will be displayed and copying will stop.

When the actuator [D] enters sensor [B] while using small paper (about 3,000 sheets are on the tray), a message will be displayed and copying will stop.

Downloaded from www.Manualslib.com manuals search engine

6.9 SHIFT TRAY SIDE-TO-SIDE MOVEMENT

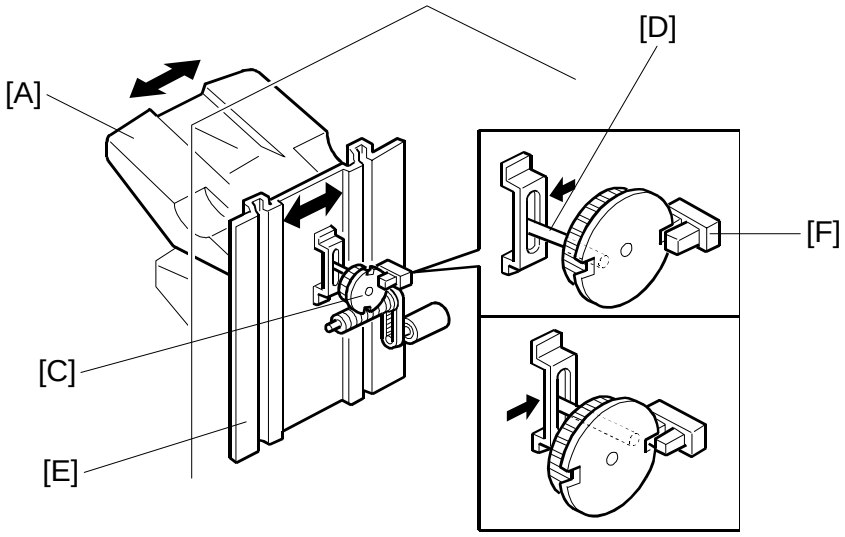

B478D520.WMF

In sort/stack mode, the shift tray [A] moves from side to side to separate the sets of copies.

The horizontal position of the shift tray is controlled by the shift motor [B] and shift gear disk [C]. After one set of copies is made and delivered to the shift tray, the shift motor turns on, driving the shift gear disk and the shaft [D]. The end fence [E] is positioned by the shaft, creating the side-to-side movement.

When the shift gear disk has rotated 180 degrees (when the shift tray is fully shifted across), the cut-out in the shift gear disk turns on the shift tray half-turn sensor [F] and the shift motor stops. The next set of copies is then delivered. The motor turns on, repeating the same process and moving the tray back to the previous position.

Downloaded from www.Manualslib.com manuals search engine

6.10 STAPLING Z-FOLDED PAPER

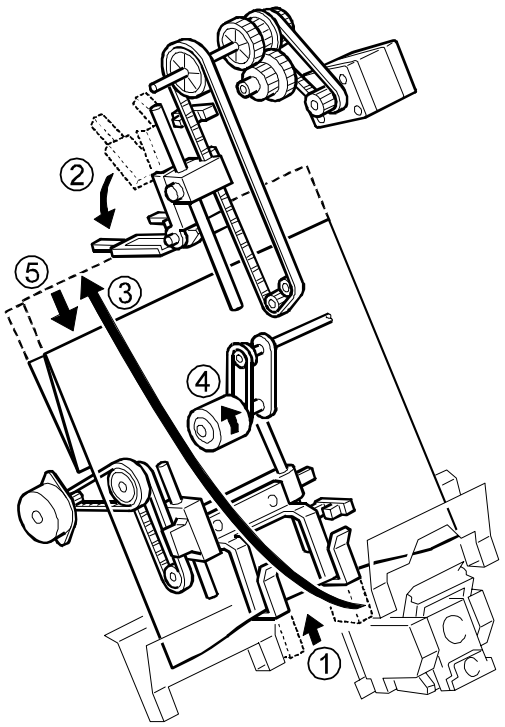

B706D004.WMF

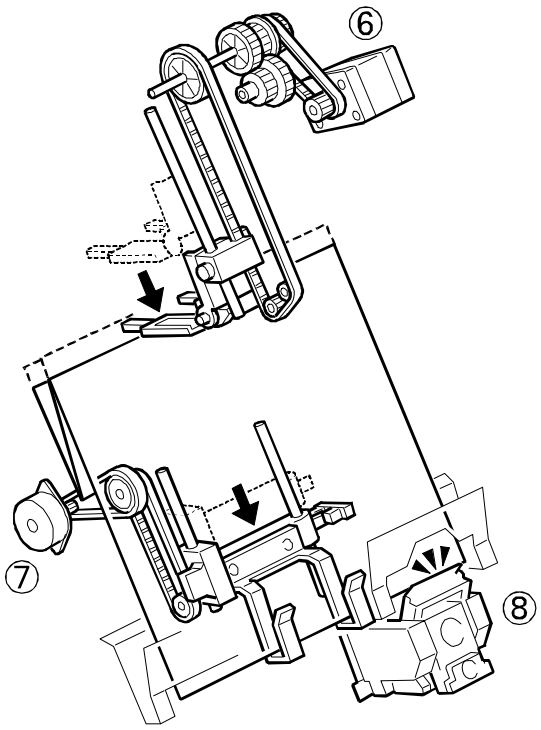

B706D005.WMF

Here is the operation sequence for jogging and stapling Z-folded sheets:

1. The lower jogger fence lifts to receive the Z-folded sheets.
2. The top fence moves down, to the horizontal position.
3. A sheet of paper goes into the stapler tray.
4. The positioning roller turns when each sheet is fed to the stapler tray.
5. Each sheet is fed down against the lower jogger fence to align the bottom edge.
6. After the set number of sheets come in, the jogger top-fence motor switches on and lowers the top fence against the top of the stack. This aligns the stack for stapling.
7. The bottom fence motor lowers the aligned stack to the stapling position.
8. The stapler staples the stack.

Downloaded from www.Manualslib.com manuals search engine

6.11 JAM CONDITIONS

1. The entrance sensor does not turn on when the copier has fed paper 426 mm after the copier exit sensor turned off.
2. The entrance sensor does not turn off when the upper transport motor has fed paper 1.5 times the paper's length after it turned on.
3. The upper tray exit sensor does not turn on when the upper transport motor has fed paper 574 mm after the entrance sensor turned on.
4. The upper tray exit sensor does not turn off when the upper transport motor has fed paper 1.5 times the paper's length after it turned on.
5. In sort/stack mode, the shift tray exit sensor does not turn on when the upper transport motor has fed paper 733 mm after the entrance sensor turned on.
6. In sort/stack mode, the shift tray exit sensor does not turn off when the upper transport motor has fed paper 1.5 times the paper's length after it turned on.
7. In staple mode, the stapler tray entrance sensor does not turn on when the upper and lower transport motor have fed paper 835 mm after the entrance sensor turned on.
8. In staple mode, the stapler tray entrance sensor does not turn off when the upper transport motor has fed paper 1.5 times the paper's length after it turned on.
9. In staple mode, the stapler tray paper sensor does not turn off within 250 pulses of the stack feed-out motor after it started.
10. In staple mode, the shift tray exit sensor does not turn off within 1,260 ms after the stack feed-out motor started.

Downloaded from www.Manualslib.com manuals search engine

6.12 PUNCH UNIT (B531)

6.12.1 PUNCH UNIT DRIVE

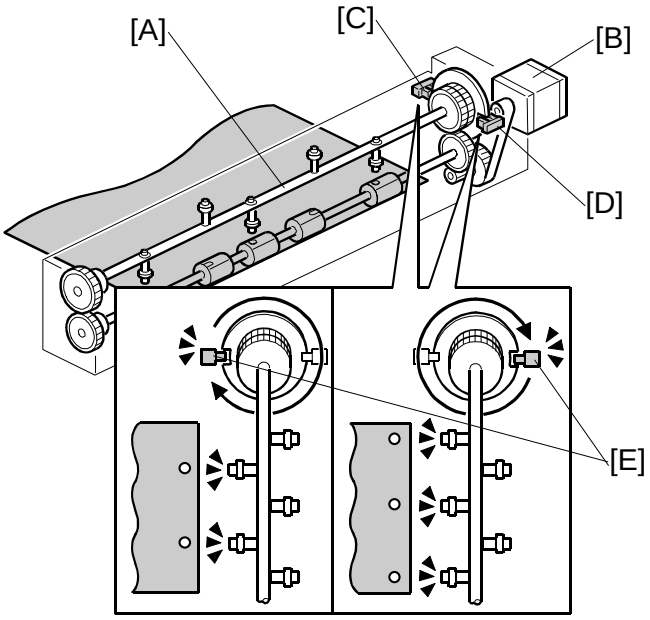

B531D102.WMF

The punch unit makes 2 or 3 holes at the trailing edge of the paper. The number of holes depends on a selection made on the operation panel.

The cam [A] has 2 punches on one side and 3 punches on the other, and is turned by the punch motor [B]. The punch motor turns on immediately after the trailing edge of the paper passes the entrance sensor. The punches on the cam rotate downward and punch holes in the paper.

After punching a sheet of paper, the cam returns to home position and stops. Home position depends on whether 2 holes or 3 holes are being made, so there are two punch HP sensors. Punch HP sensor 1 [C] is used when 2-hole punching is selected, and punch HP sensor 2 [D] is used when 3-hole punching is selected. When the cut-out [E] enters the slot of the punch HP in use (sensor 1 or 2-hole punching or sensor 2 for 3/4-hole punching) the motor stops.

The knob (not shown) on the front end of the punch unit can be turned in either direction to clear paper jammed in the punch unit.

Downloaded from www.Manualslib.com manuals search engine

6.12.2 PUNCH WASTE COLLECTION

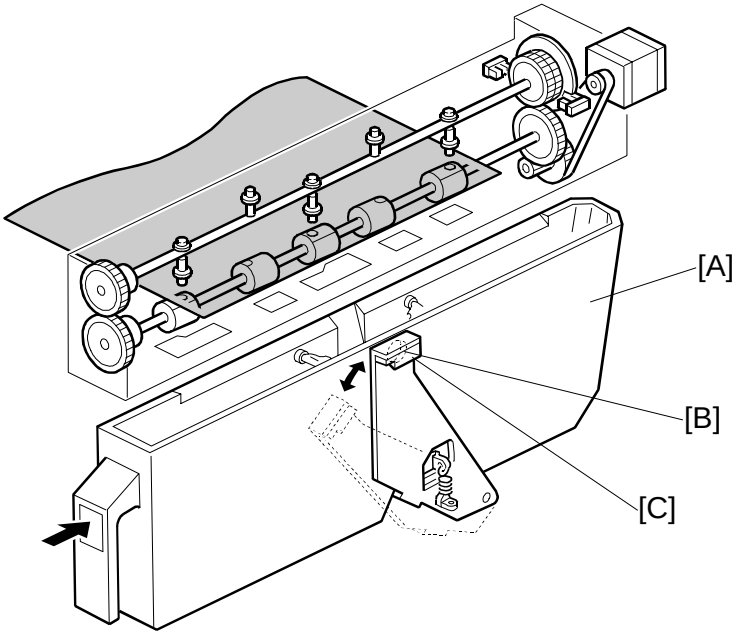

B531D103.WMF

Punch waste is collected in the punch waste hopper [A] positioned under the punch unit.

When the level of the punch waste in the hopper rises as far as the hole [B] in the hopper, the punch waste sensor [C] turns on, stops the job, and triggers a message on the operation to indicate that the hopper is full and must be removed and emptied.

The job resumes automatically after the hopper is emptied and returned to the finisher.

The punch waste hopper sensor also functions as the hopper set sensor. When the hopper is not in the finisher, or if it is not inserted completely, the spring loaded sensor arm rotates up and to the right with the punch waste sensor away from the hole in the hopper holder and a message is displayed. The message in this case is the same as the hopper full message.

Downloaded from www.Manualslib.com manuals search engine

6.13 JOGGER UNIT (B513)

6.13.1 JOGGER UNIT MECHANICAL LAYOUT

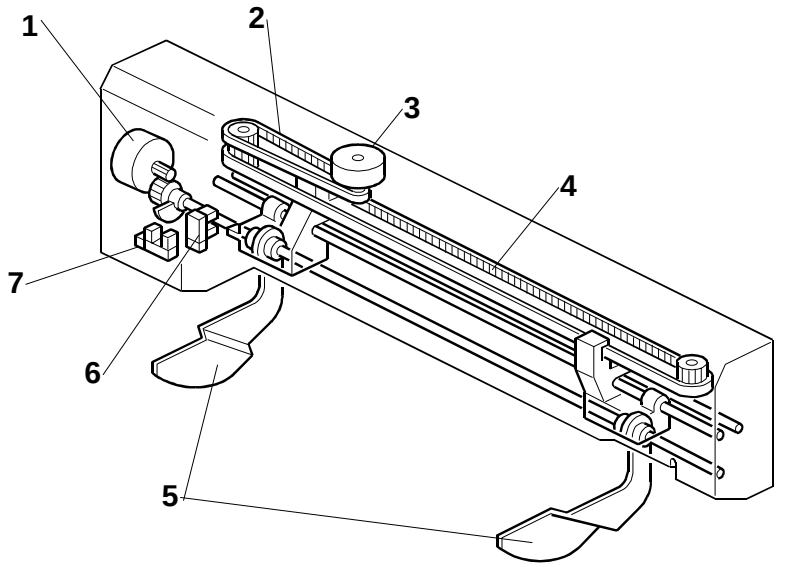

B513D003.WMF

1. Shift Jogger Fence Lift Motor
2. Shift Jogger Motor Timing Belt
3. Shift Jogger Motor
4. Shift Jogger Fence Timing Belt
5. Shift Jogger Fences
6. Shift Jogger HP Sensor
7. Shift Jogger Lift HP Sensor

Downloaded from www.Manualslib.com manuals search engine

6.13.2 JOGGER UNIT DRIVE

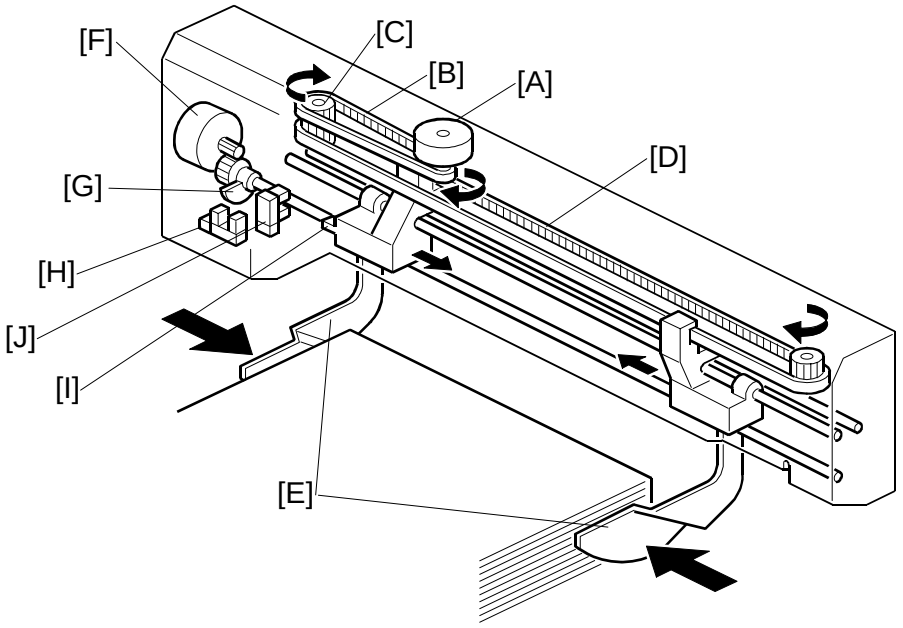

B513D002.WMF

At prescribed intervals, the jogger motor [A] switches on and drives the jogger timing belt [B], gear [C] and jogger fence timing belt [D] which drives the shift jogger fences [E] against the sides of the stack to align its edges.

At the end of the job, the jogger fence lift motor [F] switches on and raises the fences until the actuator [G] leaves the slot of the shift jogger fence lift HP sensor [H] and shuts off the shift jogger fence lift motor.

At the same time, the jogger motor reverses and drives the fences away from the sides of the stack until the actuator [I] deactivates the shift jogger fence HP sensor [J] and switches off the jogger motor.

The jogger fences remain up in the standby position until the next job starts.

Downloaded from www.Manualslib.com manuals search engine

7. OVERALL MACHINE INFORMATION

7.1 MECHANICAL COMPONENT LAYOUT

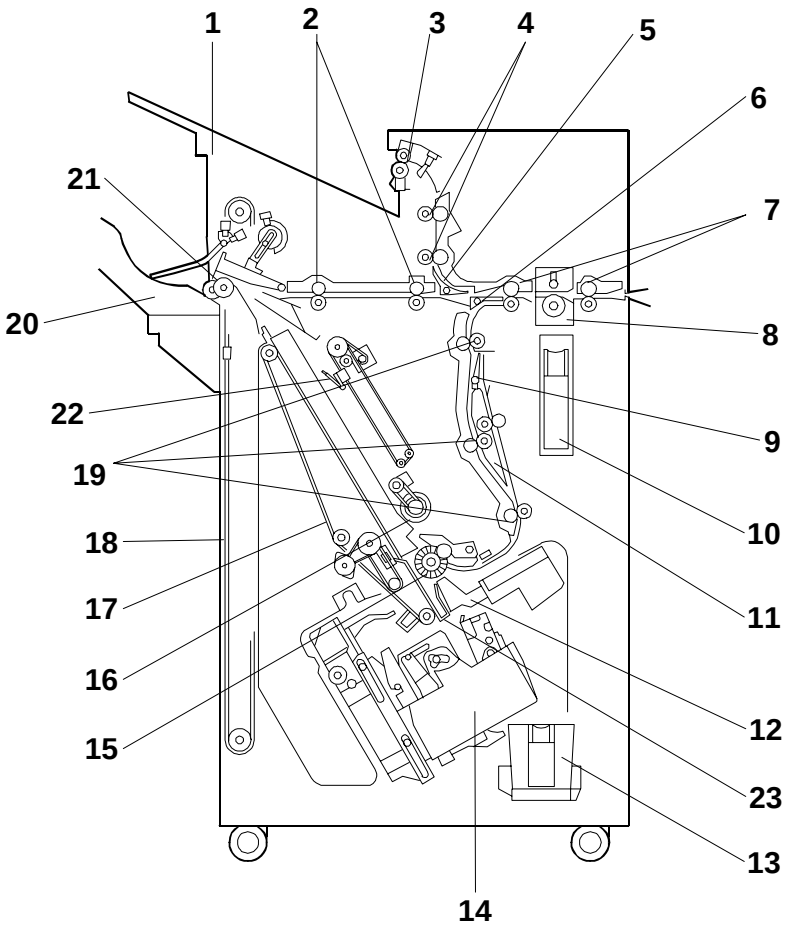

1. Upper Tray
2. Middle Transport Rollers
3. Upper Tray Exit Roller
4. Upper Transport Rollers
5. Tray Junction Gate
6. Stapler Junction Gate
7. Entrance Rollers
8. Punch Unit
9. Pre-stack Junction Gate
10. Punch Waste Hopper
11. Pre-stack Tray
12. Stack Plate
13. Staple Waste Hopper
14. Stapler
15. Alignment Brush Roller
16. Positioning Roller
17. Stack Feed-out Belt
18. Shift Tray Drive Belt
19. Lower Transport Rollers
20. Shift Tray
21. Shift Tray Exit Roller
22. Jogger Top Fence
23. Jogger Bottom Fence

Downloaded from www.Manualslib.com manuals search engine

7.2 ELECTRICAL COMPONENT DESCRIPTION

Symbol	Name	Function
Motors		
M01	Shift Tray Exit	Drives the exit roller for the shift tray.
M02	Shift Tray Lift	Moves the shift tray up or down.
M03	Exit Guide	Opens and closes the upper exit guide.
M04	Lower Transport	Drives the lower transport rollers, the positioning roller and the alignment brush roller
M05	Shift	Moves the shift tray from side to side.
M06	Positioning Roller	Moves the positioning roller into contact with the paper.
M07	Stacking Roller Drag	Moves the stacking roller in and out.
M08	Stacking Roller	Rotates the stacking roller.
M09	Jogger	Moves the jogger fences.
M10	Stack Feed-Out Belt	Drives the stack feed-out belt.
M11	Stack Plate - Center	Presses down the center of the edge for stapling.
M12	Stapler	Moves the staple unit from side to side.
M13	Stack Plate – Front	Presses down the front corner of the edge for stapling.
M14	Stack Plate – Rear	Presses down the rear corner of the edge for stapling.
M15	Stapler Rotation	Rotates the stapler 45 degrees for oblique stapling.
M16	Staple Hammer	Drives the staple hammer.
M17	Punch	Drives the punch shaft and roller. Punch Unit (B531).
M18	Upper Transport	Drives the entrance rollers, the middle and upper transport rollers, and upper tray exit roller.
M19	Shift Jogger	Drives the shift jogger fences against the sides of the sheets to align the stack, then reverses to return them to the home position. Jogger Unit (B513).
M20	Shift Jogger Lift	Raises the shift jogger fences after aligning the stack, then reverses and lowers them when returning to the home position. Jogger Unit (B513).
M21	Jogger Top Fence	Moves the top jogger fence.
M22	Jogger Bottom Fence	Moves the bottom jogger fence.
BOARDS		
PCB	Main	Controls the finisher and communicates with the copier.
PCB	Stapler	Controls the stapler unit.
PCB	Punch	Passes signals between the punch unit and the finisher main board. Punch Unit (B531).
PCB	Jogger	Controls the shift/jogger unit (B513).
SENSORS		
S01	Entrance	Detects the copy paper entering the finisher and checks for misfeeds.
S02	Upper Tray Exit	Checks for misfeeds at the upper tray.

Downloaded from www.Manualslib.com manuals search engine

Symbol	Name	Function
S03	Upper Tray Limit	Detects when the paper stack height in the upper tray is at its upper limit.
S04	Shift Tray Exit	Checks for misfeeds at the shift tray exit.
S05	Exit Guide Open	Detects whether the guide plate is opened or not.
S06	Staple Mode HP 1	Detects the shift tray home position for standby mode and for staple mode.
S07	Staple Mode HP 2	Detects the shift tray home position for standby mode and for staple mode.
S09	Shift Lower Limit – Large Paper	Detects the lower limit for the shift tray when large paper sizes are being used
S10	Shift Tray Lower Limit 2	Not used.
S11	Shift Tray Lower Limit 3	Detects when the shift tray is at its lower limit.
S12	Shift Mode HP	Detects the shift tray home position in sort/stack mode.
S13	Stacking Roller HP	Detects when the stacking roller is at home position.
S14	Shift Tray Half-Turn	Detects whether the shift tray is at either the front or home HP.
S15	Pre-Stack Tray Paper	Determines when to turn off the pre-stack paper stopper solenoid.
S16	Stapler Tray Exit	Detects jams at the staple tray exit.
S17	Positioning Roller HP	Detects the home position of the positioning roller.
S18	Stack Feed-Out Belt HP	Detects the home position of the stack feed-out belt.
S19	Stapler Tray Paper	Detects the copy paper in the stapler tray.
S20	Jogger HP	Detects the home position of the shift jogger fences.
S21	Stack Plate - Center HP	Detects the home position of the center stack plate.
S22	Stack Plate – Front	Detects the home position of the front stack plate.
S23	Stack Plate – Rear	Detects the home position of the rear stack plate.
S24	Stapler HP	Detects the home position of the staple unit for side-to-side movement.
S25	Stapler Rotation HP	Detects the home position of the stapler unit for 45-degree rotation.
S26	Stapler Return	Detects the on timing of the stapler return solenoid.
S27	Staple Waste Hopper	Detects when the staple waste hopper is full.
S28	Punch Waste Hopper	Detects when the punch waste hopper is full and detects when the punch tray is set. Punch Unit (B531).
S29	Punch HP 1	Detects the cam home position for the 2-hole punch. Punch Unit (B531).
S30	Punch HP 2	Detects the cam home position for 3/4 punch. Punch Unit (B531).
S31	Shift Jogger HP	Detects the home position of the jogger unit arms during paper alignment. Jogger Unit (B513).
S32	Shift Jogger Lift HP	Detects the when both shift jogger fences are at the lowered position and ready to move against the sides of the stack. Jogger Unit (B513).
S33	Top Fence HP	Detects the top fence home position for Z-fold paper staple mode.

Downloaded from www.Manualslib.com manuals search engine

Symbol	Name	Function
S34	Bottom Fence HP	Detects the bottom fence home position for Z-fold paper staple mode.
Symbol	**Name**	**Function**
SOLENOIDS		
SOL1	(Upper) Tray Junction Gate	Drives the tray junction gate.
SOL2	Stapler Junction Gate	Drives the stapler junction gate.
SOL3	Pre-Stack Junction Gate	Drives the pre-stack junction gate.
SOL4	Pre-stack Paper Stopper	Drives the stopper pawl of the pre-stacking tray.
SOL5	Stapler Return	Positions the stapler correctly on its return from the staple supply point.
SWITCHES		
SW1	Shift Tray Upper Limit	Cuts the power to the shift tray lift motor when the shift tray position is at its upper limit.
SW2	Front Door Safety	Cuts the dc power when the front door is opened.
SW3	Emergency Stop	Switches the current job off and on to allow time for the operator to remove paper from the shift tray.

Downloaded from www.Manualslib.com manuals search engine

7.3 DRIVE LAYOUT

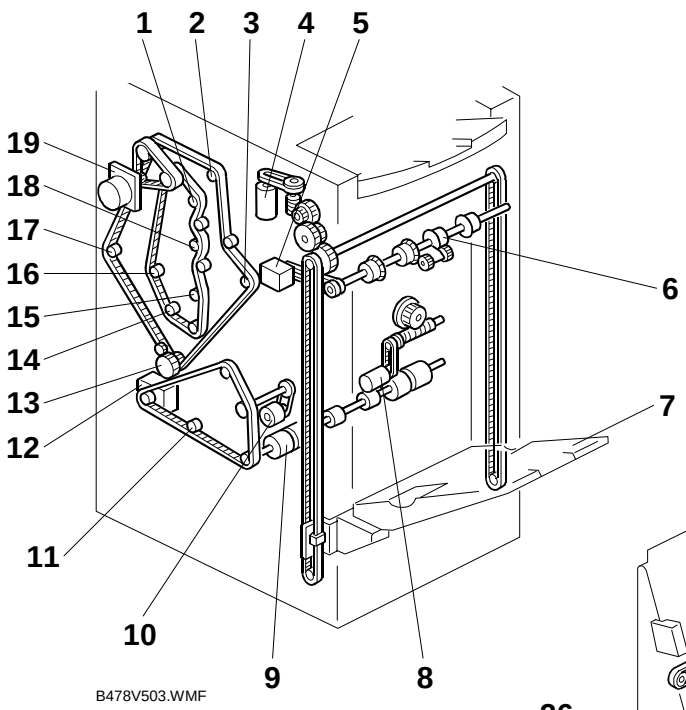

B478V503.WMF

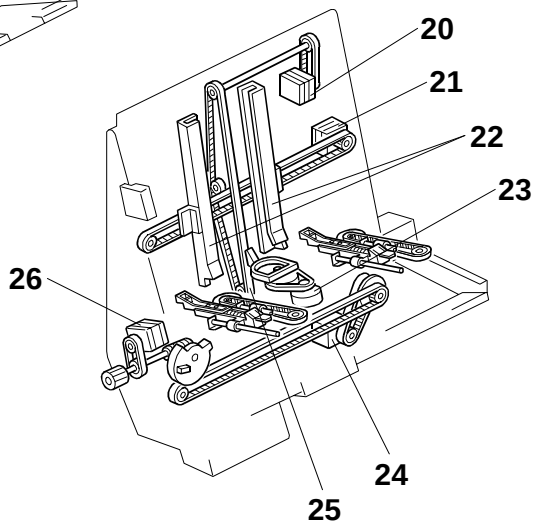

B478V504.WMF

1. Upper Transport Roller 2
2. Upper Tray Exit Roller
3. Lower Transport Roller 2
4. Shift Tray Lift Motor
5. Shift Tray Exit Motor
6. Shift Tray Exit Roller
7. Shift Tray
8. Shift Motor
9. Staple Tray Exit Roller
10. Positioning Roller
11. Lower Transport Roller 3
12. Lower Transport Motor
13. Lower Transport Rollers 2
14. Lower Transport Roller 1
15. Transport Roller 1
16. Entrance Roller 2
17. Entrance Roller
18. Upper Transport Roller 1
19. Upper Transport Motor
20. Stack Feed-out Motor
21. Jogger Motor
22. Jogger Fence
23. Stack Plate Motor
24. Stapler Motor
25. Stack Feed-out Belt
26. Stapler Rotation Motor

Downloaded from www.Manualslib.com manuals search engine

9-BIN MAILBOX
(Machine Code: B762)

Downloaded from www.Manualslib.com manuals search engine

TABLE OF CONTENTS

1. REPLACEMENT AND ADJUSTMENT B762-1
1.1 COVERS AND TRAYS B762-1
1.2 SENSORS B762-2
1.3 MAIN MOTOR AND CONTROL BOARD B762-3

2. DETAILS B762-4
2.1 OVERVIEW B762-4
2.1.1 MAIN COMPONENT LAYOUT B762-4
2.1.2 DRIVE LAYOUT B762-5
2.1.3 PAPER PATH B762-6
2.2 BASIC OPERATION B762-7
2.2.1 PAPER PATH B762-7
2.3 OVERFLOW DETECTION B762-8
2.3.1 OVERVIEW B762-8
2.3.2 DETECTION TIMING B762-9
2.4 PAPER MISFEED DETECTION TIMING B762-10
2.4.1 A4 SIDEWAYS (LEF) → 1ST BIN TRAY B762-10
2.4.2 A4 SIDEWAYS (LEF) → 2ND ~ 9TH BIN TRAY B762-10

Downloaded from www.Manualslib.com manuals search engine

Downloaded from www.Manualslib.com manuals search engine

1. REPLACEMENT AND ADJUSTMENT

⚠CAUTION
Switch the machine off and unplug the machine before starting and procedure in this section.

1.1 COVERS AND TRAYS

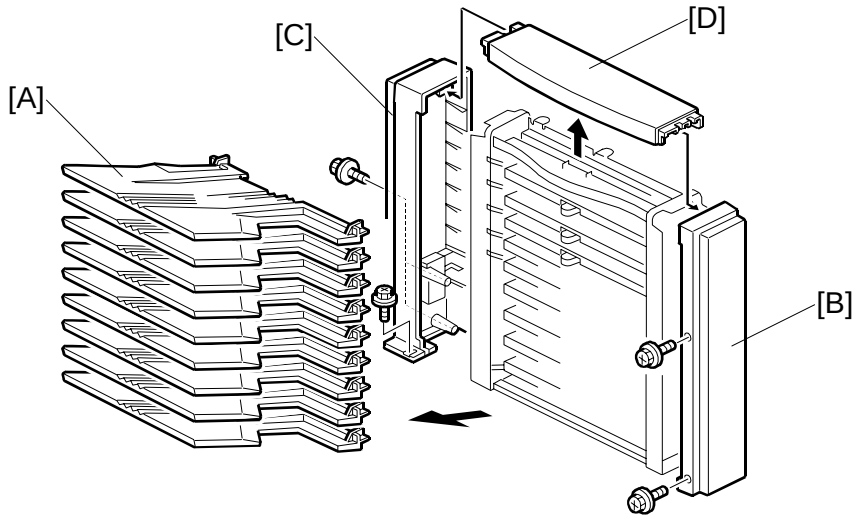

B471R001.WMF

[A]: Trays
- Grip each tray by the front and lift out.

[B]: Front cover (x2)
[C]: Rear cover (x3)
[D]: Top cover

Downloaded from www.Manualslib.com manuals search engine

1.2 SENSORS

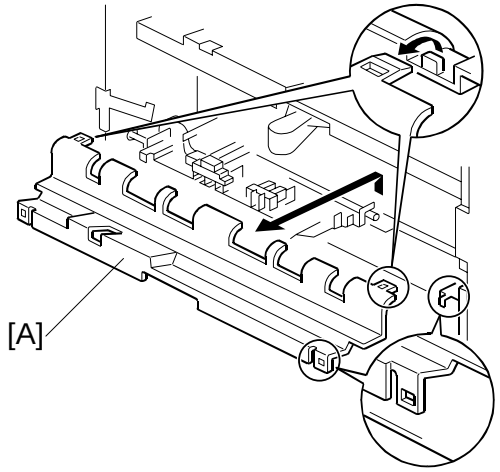

B471R003.WMF

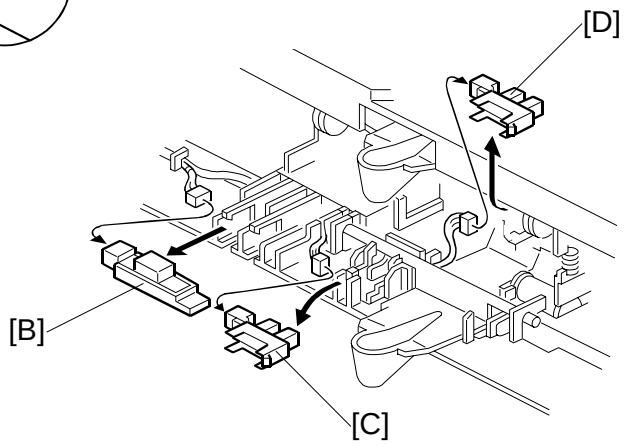

B471R104.WMF

Remove the tray (☛ 1.1)

[A]: Bin cover
[B]: Tray sensor (✍ x1)
[C]: Tray overflow sensor (✍ x1)
[D]: Vertical transport sensor (✍ x1)
- Raise the pawl, then grip the bottom of the sensor to remove.

Downloaded from www.Manualslib.com manuals search engine

1.3 MAIN MOTOR AND CONTROL BOARD

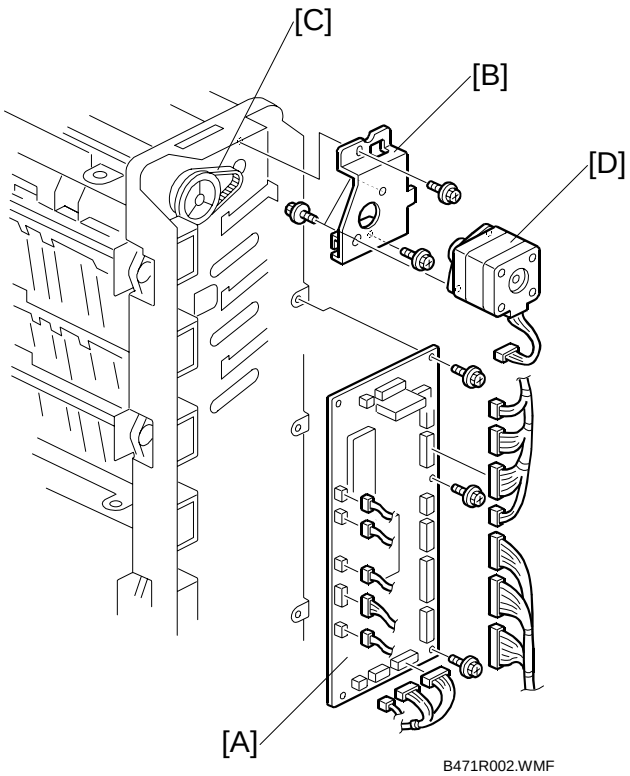

Rear cover (☛ 1.1)

[A]: Control board (🔩 x3, 🖐 x17)
[B]: Main motor bracket (main motor 🖐 x1, 🔩 x2)
[C]: Timing belt
[D]: Main motor (🔩 x1)

Downloaded from www.Manualslib.com manuals search engine

2. DETAILS

2.1 OVERVIEW

2.1.1 MAIN COMPONENT LAYOUT

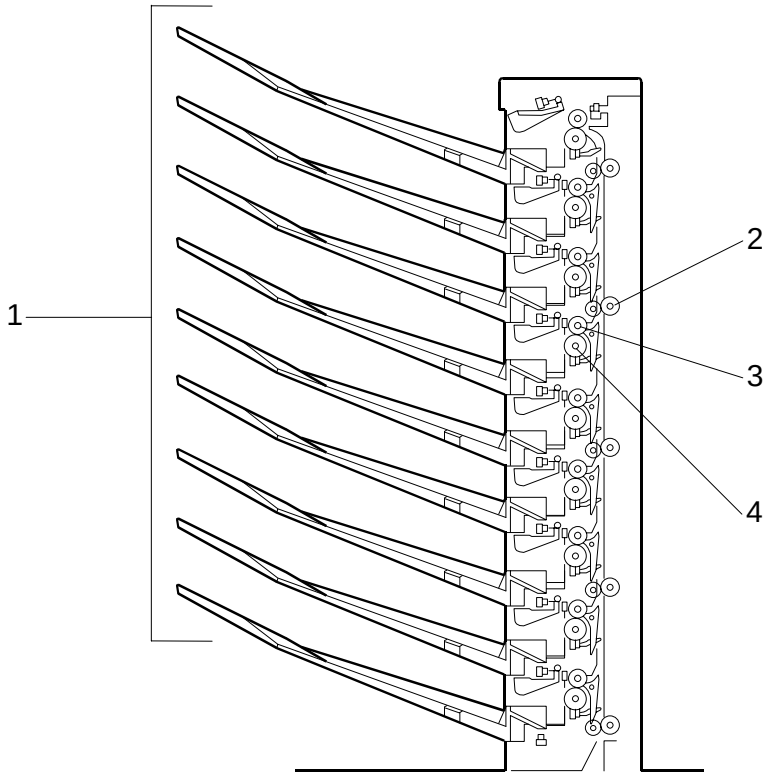

1. Bins (x9)
2. Vertical Transport Rollers (x5)
3. Turn Gates (x8)
4. Exit Rollers (x9)

The trays are 1 to 9 (bottom to top). The numbers are clearly marked on the side of the unit. The top tray does not require a turn gate. When the top tray is selected for output, all turn gates remain closed, leaving only the top bin open.

Downloaded from www.Manualslib.com manuals search engine

2.1.2 DRIVE LAYOUT

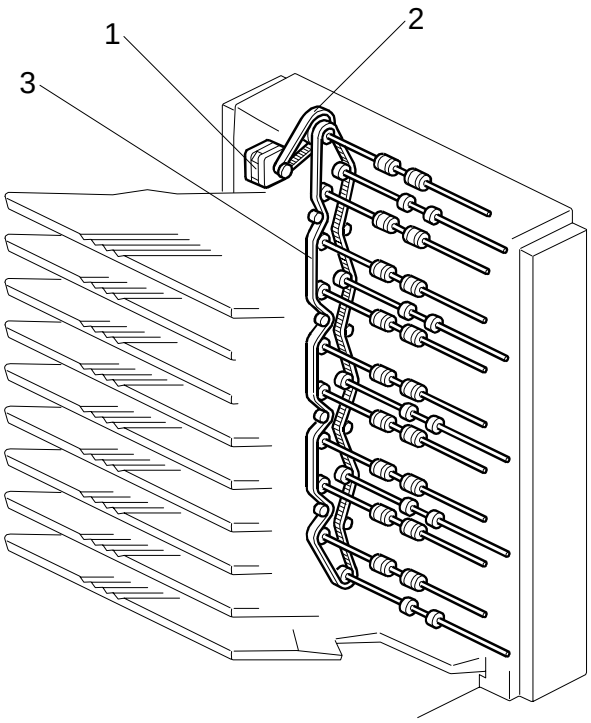

B471D002.WMF

1. Main Motor
2. Main Timing Belt
3. Timing Belt

Downloaded from www.Manualslib.com manuals search engine

2.1.3 PAPER PATH

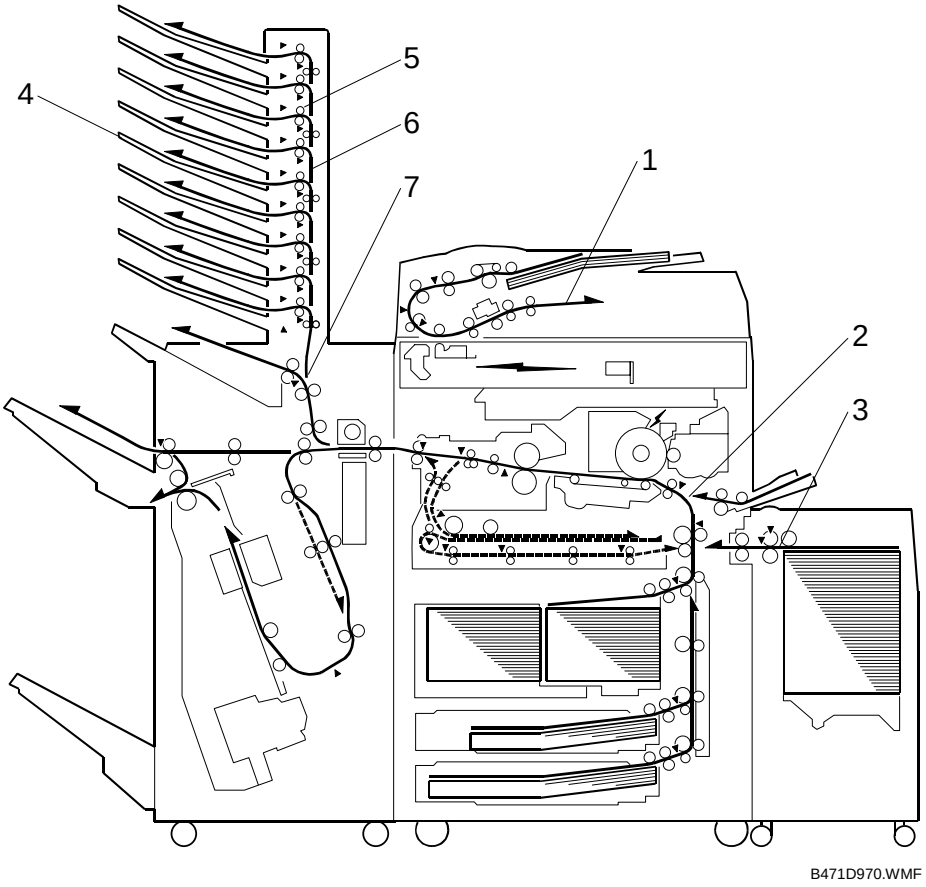

1. Original Paper Path
2. Vertical Transport Path
3. LCT Feed
4. Selected Trays
5. Turn Gates
6. Mailbox Paper Path
7. Junction Gate (paper goes either up to the mailbox or out to the finisher's proof tray)

The solenoid for the junction gate (7) is part of the mailbox.

Downloaded from www.Manualslib.com manuals search engine

2.2 BASIC OPERATION

2.2.1 PAPER PATH

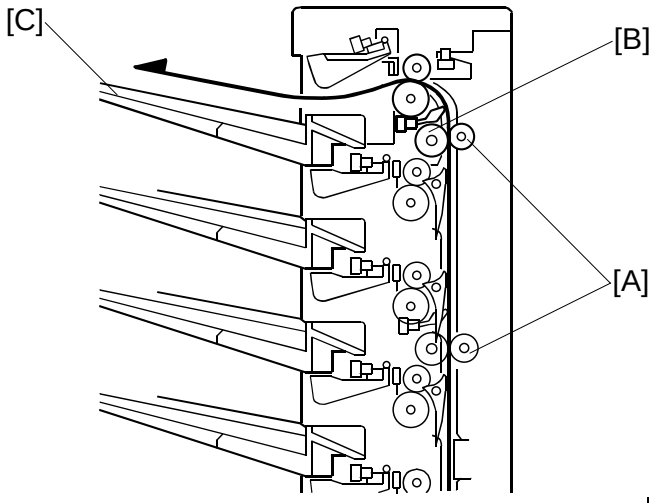

B471D004.WMF

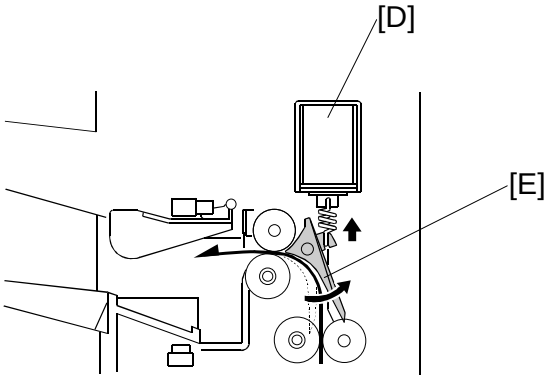

B471D105.WMF

The unit is mounted on top the finisher and connected to the finisher by a 14-pin connector. When the leading edge of the paper passes and activates the entrance sensor of the finisher, the mailbox main motor switches on and the mailbox vertical transport rollers [A] begin to turn. The exit roller [B] feeds the paper out to the selected tray [C].

A solenoid [D] opens and closes the junction gate [E]. When a solenoid switches on, the gate opens and directs to the paper to the tray.

NOTE: When the top tray (bin 9) is selected, all solenoids are off and closed, allowing the paper to pass to the top tray (bin 9 does not require a solenoid).

When the last sheet is fed out, it switches off the vertical transport sensor, and both the mailbox main motor and the junction gate solenoid of the selected bin switch off. The mailbox normally feeds paper at 372 mm/s, about the same speed as the finisher. (The finisher speed is 370 mm/s.)

Downloaded from www.Manualslib.com manuals search engine

2.3 OVERFLOW DETECTION

2.3.1 OVERVIEW

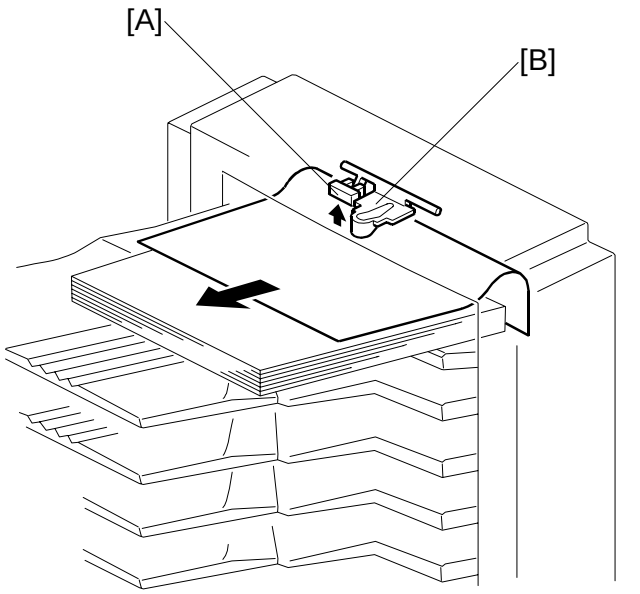

B471D005.WMF

An overflow sensor [A] and actuator [B] are above the exit of each paper tray. The actuator, mounted on a swivel arm, remains in contact with the top of the stack. The actuator rises as the stack becomes higher until it activates the sensor. Then, a tray full message appears on the operation panel and the job halts. If the paper is removed before the tray is full, the job continues.

Downloaded from www.Manualslib.com manuals search engine

2.3.2 DETECTION TIMING

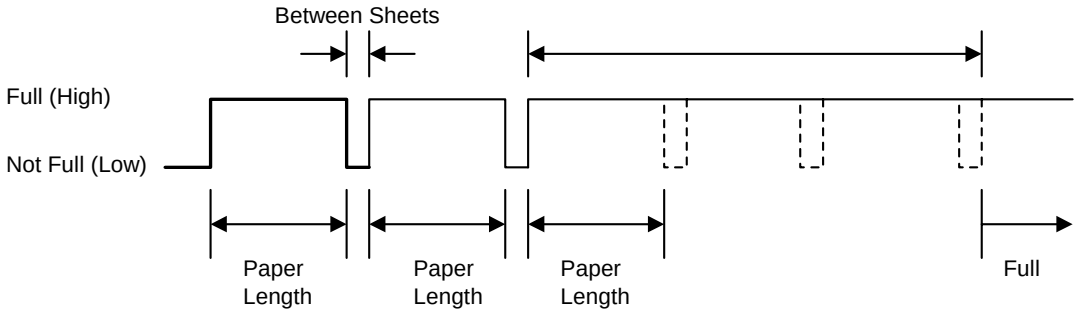

When the mailbox exit sensor goes high for the prescribed time (T), the machine determines that the tray is full. The value of T is calculated, regardless of paper size, as follows:

T (s) = (60/s x max. size ppm) x 3 s

After the tray full sensor switches on, if it remains on for the feeding of eight additional sheets, then this notifies the machine that the tray is full.

“T” is calculated as shown below. For example, for a minimum ppm of 12 prints (regardless of paper size), the value T is 15 s. Then, if the sensor detects paper for 15 s or more, the machine stops the copy job.

Downloaded from www.Manualslib.com manuals search engine

2.4 PAPER MISFEED DETECTION TIMING

2.4.1 A4 SIDEWAYS (LEF) ➔ 1ST BIN TRAY

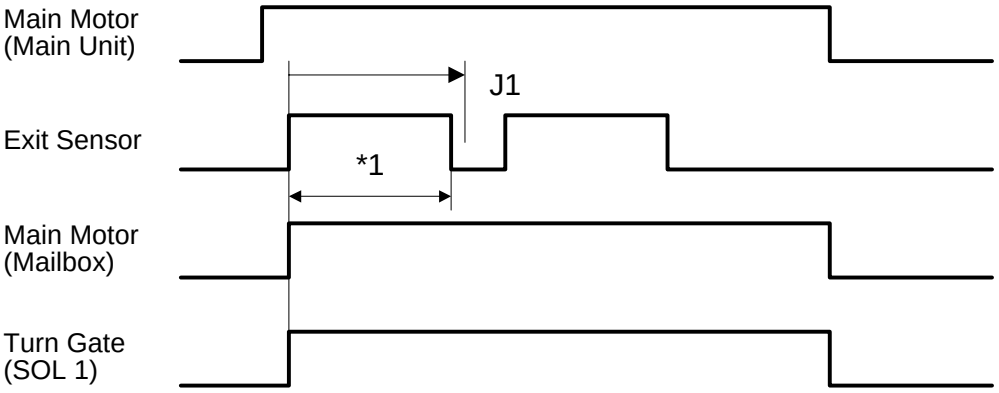

***1: Time required for A4 LEF**

B471D011.WMF

2.4.2 A4 SIDEWAYS (LEF) ➔ 2ND ~ 9TH BIN TRAY

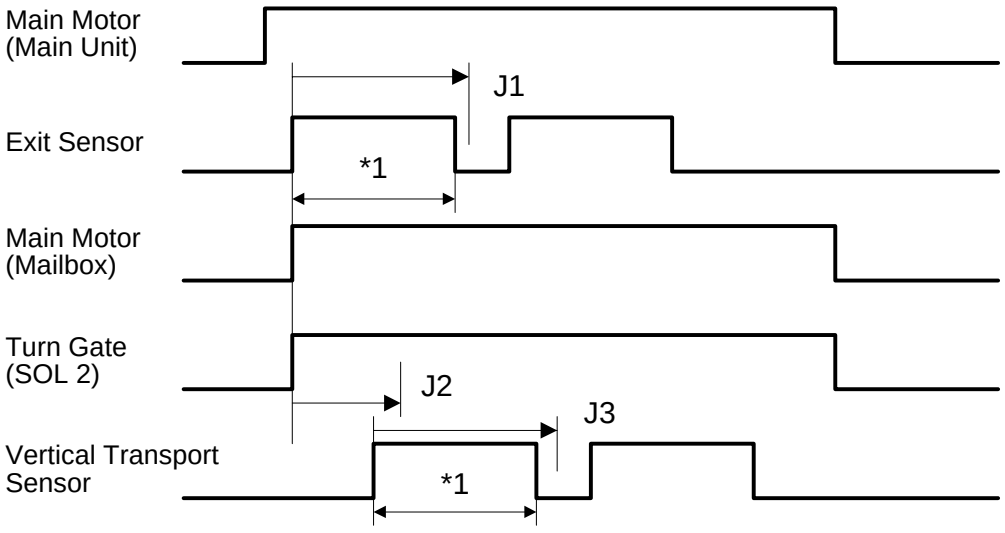

***1: Time required for A4 Sideways (LEF)**
***2: Feed to 9th Tray: All SOLs OFF.**

B471D012.WMF

Downloaded from www.Manualslib.com manuals search engine

J1 Timing: After the leading edge of the sheet activates the mailbox exit sensor, a misfeed is detected if the sensor does not switch off within:

X+0.5 s

Where X = The amount of time prescribed for the paper size to pass the sensor. (X = 1.74 s for A4 Sideways for example)

J2 Timing: After the mailbox paper exit sensor is activated, the machine determines that the paper has not yet fed and detects a misfeed if the vertical transport sensor does not activate within the time prescribed for the paper size (1.94 s for A4 paper, for example)

J3 Timing: After the vertical transport sensor is activated, a misfeed is detected if the vertical transport sensor does not turn off within:

X+0.52 s

Where X = The amount of time prescribed for the paper size to pass the sensor. (X = 2.26 s for A4 Sideways for example)

Downloaded from www.Manualslib.com manuals search engine

Downloaded from www.Manualslib.com manuals search engine

SPECIFICATIONS

1. MAINFRAME

1.1 COPYING

Configuration	Console			
Dimensions (w x d x h) (no ARDF)	750 x 850 x 1050 mm (29.5 x 33.5 x 41.3 in.)			
Weight (with ARDF)	Less than 298 kg (655.6 lb.)			
Original Scanning	Flatbed with moving 3-line CCD array, image scanning			
Copy Process	4-drum dry electrostatic transfer system with internal transfer belt			
Development	Dry dual-component magnetic brush development			
Fusing	Oil-less belt fusing system			
Engine speed	e-STUDIO4500c	Full color 45 cpm / Monochrome 60 cpm		
	e-STUDIO5500c	Full color 55 cpm / Monochrome 60 cpm		
Duplex Copy Speed (single-sided to double-sided)	e-STUDIO4500c	Full color 45 cpm / Monochrome 60 cpm		
	e-STUDIO5500c	Full color 55 cpm (45 cpm with ARDF 1-to-1) / Monochrome 60 cpm		
Duplex Copy Speed (double-sided to double-sided)	e-STUDIO4500c e-STUDIO5500c	Full color 28 cpm or higher / Monochrome 42 cpm or higher		
Warm-up time	300 sec.			
First copy	Full color	7.5 sec.		
	Monochrome	6.5 sec.		
Original types	Sheet, book, object			
Max. original size	A3/11” x 17”			
Resolution	Scanning	600 dpi 10-bit		
	Copying	600 dpi 6-bit		
	Printing	600 dpi 4-bit		
Max. image size	297 x 600 mm (11.7” x 23.6”)			
Magnification	NA	7 Reduction, 5 Enlargement 93%, 85%, 78%, 73%, 65%, 50%, 25%, 121%, 129%, 155%, 200%, 400%		
	~~EU, Asia~~	~~93%, 82%, 75%, 71%, 65%, 50%, 25%, 115%, 122%, 141%, 200%, 400%~~		
Zoom	25% to 400%			
Paper capacity (80 g/m2 or 20 lb.)	Tray 1 (Tandem tray)		3,100	1,550 x 2
	Tray 2 (Universal cassette)		550	
	Tray 3 (Universal cassette)		550	
	Bypass tray		100	
	Max. Capacity (Copier only)		4,300	
	Max. Capacity (with LCT)		8,300	LCT: 4,000
Original size detection (book mode)	NA	11" x 17", 8½" x 14" SEF, 8½" x 11" LEF/SEF		
	~~EU, Asia~~	~~A3/A4 SEF, B4 SEF, A4/B5 LEF/SEF, 8½ " x 13" SEF (8K, 16K available with SP mode)~~		
Original size detection (ARDF)	NA	11" x 17", 10" x 14", 8 ½ x 14" SEF 8½" x 11", 5½" x 8½" SEF/LEF 7¼" x 10½", A3 SEF A4 SEF/LEF		

Downloaded from www.Manualslib.com manuals search engine

	~~EU, Asia~~	~~A3, B4 SEF~~ A4, B5, A5, ~~B6 SEF/LEF~~ 8½" x 13", ~~8K SEF~~ ~~16K SEF~~

Paper Sizes	For more, see "Paper Sizes"		
Paper weight	Tray 1 (Tandem tray)		52.3 – 127.9 g/m2 14 – 34 lb. bond
	Tray 2 (Universal tray)		52.3 – 127.9 g/m2 14 – 34 lb. bond
	Tray 3 (Universal tyar)		52.3 – 127.9 g/m2 14 – 34 lb. bond (up to 163 g/m2, 44 lb. index/ 60 lb.)
	Bypass		52.3 – 256 g/m2 14 – 68.5 lb. bond
	Duplex mode		64 – 127.9 g/m2 17 – 34 lb. bond
Output capacity	500 sheet (A4, 8½" x 11")		With Copy Tray B756
Power	NA	120V 20A 60 Hz	
	~~EU, Asia~~	~~220-240V 10A 50-60 Hz~~	
Max. power consumption	NA	Less than 1920 W	
	~~EU, Asia~~	~~Less than 1920 W~~	
Counter	NA	Electric counter, mechanical counter x2	
	~~EU, Asia~~	~~Electric counter, mechanical counter x1~~	
Counterfeit prevention	Bill recognition, invisible marking function		

Downloaded from www.Manualslib.com manuals search engine

Paper Sizes

			Tandem Tray 1100 sheet x2		2nd & 3rd Tray 550 sheet each		LCT 1000 sheet		Bypass 100 sheet		Duplex
Paper Size	Direction	Measurement	NA	EU Asia	NA	EU Asia	NA	EU Asia	NA	EU Asia	
A3	SEF	297 x 420 mm	OP_T	OP_T	A_AD	A_AA	X	X	A_WD	A_WD	
B4	SEF	257 x 364 mm	OP_T	OP_T	A_AD	A_AA	OP_L	OP_L	#_S	#_S	
A4	LEF	297 x 210 mm	A	A	A_AD	A_AD	A	A	#_S	#_S	
A4	SEF	210 x 297 mm	OP_T	OP_T	A_AD	A_AD	OP_L	OP_L	#_S	A_WD	
B5	LEF	257 x 182 mm	X	X	A_AD	A_AD	A	A	#_S	#_S	
B5	SEF	182 x 257 mm	X	X	A_AD	A_AD	X	X	#_S	#_S	
A5	LEF	210 x 148 mm	X	X	UP	UP	X	X	#_S	#_S	
A5	SEF	148 x 210 mm	X	X	UP	A_AD	X	X	#_S	A_WD	
B6	SEF	128 x 182 mm	X	X	X	X	X	X	#_S	#_S	X
A6	SEF	105 x 148 mm	X	X	X	X	X	X	#_S	#_S	X
DTL	SEF	8½" x 11"	OP_T	OP_T	A_AD	A_AD	X	X	A_WD	#_S	
LG	SEF	8½" x 14"	OP_T	OP_T	A_AD	A_AD	OP_L	OP_L	A_WD	#_S	
LT	LEF	11" x 8½"	A	A	A_AD	A_AD	A	A	#_S	#_S	
LT	SEF	8½" x 11"	OP_T	OP_T	A_AD	A_AD	OP_L	OP_L	#_S	#_S	
HLT	LEF	8½" x 5½"	X	X	A_AD	A_AD	X	X	X	X	
HLT	SEF	5½" x 8½"	X	X	A_AD	A_AD	X	X	A_WD	#_S	
Foolscap	SEF	8½" x 13"	X	X	A_AD	A_AD	X	X	#_S	#_S	
Folio	SEF	8¼" x 13"	X	X	A_AD	A_AD	X	X	#_S	#_S	
F	SEF	8" x 13"	X	X	A_AD	A_AD	X	X	#_S	#_S	
Executive	LEF	10½" x 7¼"	X	X	A_AD	A_AD	X	X	#_S	#_S	
Executive	SEF	7¼"" x 10½"	X	X	A_AD	A_AD	X	X	#_S	#_S	
8K	SEF	267 x 390 mm	X	X	A_AD	A_AD	X	X	#_M	#_M	
16K	LEF	267 x 195 mm	X	X	A_AD	A_AD	X	X	#_M	#_M	
16K	SEF	195 x 267 mm	X	X	A_AD	A_AD	X	X	#_M	#_M	
A3 Wide	SEF	12" x 18"	X	X	A_AD	A_AD	X	X	#_S	#_S	

Table Key

SEF:	Short Edge Feed
LEF:	Long Edge Feed
A	Paper size to be set in copier
A_AD	Paper size detected automatically
A_WD	Paper size detected by width
OP_T	Paper size set in Tray 1 with A3 / 11"x17" B331 installed.
OP_L	Paper size set in LCT B473 with 8 1/2"x14" Paper Size Tray B474 installed.
#_S	Paper size setting is required. Press [#] key then select paper size from the list on touch panel
#_M	Paper size setting is required. To press [#] then enter actual paper size of paper manually.
X	NG

Downloaded from www.Manualslib.com manuals search engine

1.2 PRINTING

CPU	Intel Celeron LV 733 MHz	
RAM	1384 MB (shared with copying, scanning)	
HDD	320 GB (80 GB x 4)	
PDL	RPCS, PCL5c, PCL6	
Print Resolution (max.)	600 x 600 dpi (4-bit)	
Fonts	Standard	48 PCL fonts
	Option	With PS3, 136 Adobe PostScript Type 1 fonts
Connectivity		
Host interface	Standard	Ethernet RJ-45, 10-BaseT, 100BaseTX, USB 2.0
Network Protocol		TCP IP, IPX/SPX, SMB (NetBEUI*1, NetBIOS over TCP/IP), AppleTalk (auto switching)
MIB support	Private MIB	Supported by Ricoh
	Standard MIB	MIB-II (RFC1213), HostResource (RFC1514), PrinterMib (RFC1759)
Network, operating systems		Windows 95, 98SE, NT 4.0, 2000, Me, XP, Server 2003 NetWare 3.12, 3.2, 4.1, 4.11, 5.0, 5.1, 6 Unix, Sun Solaris, HP-UX, SCO Open Server, Red Hat Linux, IBM AIX, Mac OS 8.6 to 9.2x, OS X 10.1 or later

*1 Smart Device Monitor for Client is necessary for NetBEUI.

Downloaded from www.Manualslib.com manuals search engine

1.3 SCANNER

Optical resolution	100, 150, **200** (default), 300, 400, 600 dpi		
Scanning speed	Full color: 45 cpm / Black: 60 cpm (e-STUDIO4500c/5500c)		
Max. scan area	297 x 432 mm (11.7" x 17")		
Auto scan size detection	Exposure glass	Supported (conforms with copier specifications)	
	ARDF	Supported (conforms with copier specifications)	
Original size	Standard	A3, A4 SEF, A4 LEF, A5 SEF/LEF, B4, B5 SEF, B5 LEF, 11" x 17" SEF, 8½" x 14" SEF, 8½" x 13" SEF, 8½" x 11" SEF/LEF, 5½ " x 8½" SEF/LEF	
	Customized	Min.	10 x 10 mm (0.04" x 0.04")
		Max.	297 x 432 mm (11.7" x 17")
Compression Method	BW Binary: TIFF MH, MR, MMR Grayscale/Full Color: JPEG		
Interface support	10/100BaseTX		
Scan mod	Default	BW Text	
	Supported	BW OCR, BW Text-Photo, BW Photo, Grayscale, FC Photo, FC Text Photo	
	Options*[1]	Auto Color Selection, sRGB Photo, sRGB Text Photo	
Image Density	Auto Density Selection, Manual Setting (7 levels)		
Image Rotation	Supported		
SADF/Batch mode	Supported		
Mixed size originals	Supported		

*[1] File Format Converter (MLB) is necessary.

Downloaded from www.Manualslib.com manuals search engine

2. ARDF

Dimensions (w x d x h)	680 x 560 x 180 mm (26.8 x 22 x 7.1 in.)	
Weight	Less than 19.5 kg (42.9 lb.)	
Power consumption	Less than 59 W	
Noise	Less than 71 db	
Stack capacity	100 sheets	
Original size	Simplex	A3, A4, A5, B5, B6 5½" x 8½", 8½" x 11", 8½" x 14", 11" x 17"
	Duplex	A3, A4, A5, B4, B5 5½" x 8½", 8½" x 11", 8½" x 14", 11" x 17"
Original weight	Simplex	40 – 128 g/m^2 11 – 34 lb. bond
	Duplex	52 – 128 g/m^2 14 – 34 lb. bond
Auto Original Size Detection	NA	11" x 17", 10" x 14", 8 ½ x 14" SEF 8½" x 11", 5½" x 8½" SEF/LEF 7¼" x 10½", A3 SEF A4 SEF/LEF
	EU, Asia	~~A3, B4 SEF~~ ~~A4, B5, A5, B6 SEF/LEF~~ ~~8½" x 13", 8K SEF~~ ~~16K SEF~~
Original set position	Face-up, left-rear corner	
Special original setting	Batch, mixed sizes	
Feeding speed	Full color	45 cpm
	Black	60 cpm
Power source	From copier	

Downloaded from www.Manualslib.com manuals search engine

3. OPTIONAL PERIPHERALS

3.1 LARGE CAPACITY TRAY B473

Installation of the LCT Adapter B699 is necessary for the LCT.

Dimension (w x d x h)	Stand-alone	314 x 458 x 659 mm (12.4 x 18 x 25.9 in.)
	With LG/B4 Option	462 x 458 x 659 mm (18.2 x 18 x 25.9 in.)
Weight	Standalone	Less than 20 kg (44 lb.)
	With LG/B4 Option	Less than 27 kg (59.4 lb.)
Power Consumption		Less than 50 W
Noise		Less than 74dB
Paper Size		A4, B5, 11"x 8½" LEF
Paper Weight		52 - 128g/m² 14 lb – 34 lb. Bond
Paper Capacity (80 g/m^2 or 20 lb. bond)		4,000 sheets** 2,500 sheets*
Paper Weight		50 - 128g/m² 14 lb – 34 lb. Bond

Note1: *with B4/LG Option
Note2: **80g/m^2 / 20lb. Bond paper

3.2 8½ X 14" / B4 PAPER SIZE TRAY B474

This is the option for the LCT B473 that allows it to accept LG (8½ x 14") / B4 size paper.

Paper Size	8 1/2"x14", 8 1/2"x11", A4, B4 SEF
Paper Weight	52 - 128g/m² 14 lb – 34 lb. Bond

Downloaded from www.Manualslib.com manuals search engine

3.3 9-BIN MAILBOX B762

The mailbox can be installed on top of the 2000-Sheet Finisher B700, the 3000-Sheet Finisher B701, or the 3000-Sheet Finisher B706.

Dimension (w x d x h)	540 x 600 x 660 mm (21.3 x 23.6 x 26 in.)
Weight	Less than 15 kg (33 lb.)
Power Consumption	Less than 48 W
Noise	Less than 74 dB
Number of Bins	9 bins
Stack Capacity of each Bin	100 sheets*
Paper Size	A5. A4, A3 5½" x 8½", 8½" x11", 8½" x14", 11"x17"
Paper Weight	52 - 128g/m² 14 lb. – 34 lb. Bond

Note: *The capacity to be calculated with 80g/m^2 or 20lb. Bond paper.

3.4 COVER INTERPOSER TRAY B704

The cover interposer tray can be used with the 2000-Sheet Finisher B700, 3000-Sheet Finisher B701, 3000-Sheet Finisher B706. The interposer tray is installed between the copier and the finisher. The interposer tray and the Mailbox B762 cannot be installed together.

Dimension (w x d x h)		500 x 600 x 600 mm (19.7 x 23.6 x 23.6 in.)
Weight		Less than 12 Kg (26.4 lb.)
Power Consumption		Less than 43 W
Noise		Less than 65 db
Stack Capability*		200 Sheets
Paper Size		A5-A3, 5½" x 8½" - 11" x 17"
Paper Weight		64 g/m²-216 g/m² 17 lb. Bond- 58 lb. Index, 80 lb. Cover
Original Set Position		Center
Original Set	Normal Feed	Face-up
	Booklet Feed	Face-down

Note: *The capacity to be calculated with 80g/m^2 or 20lb. Bond paper.

Downloaded from www.Manualslib.com manuals search engine

3.5 3000-SHEET FINISHER B706

This finisher is compatible with other copiers without special items. However, this copier requires installation of the Finisher Adapter B698 on this finisher.

Finisher				
Dimension (w x d x h)		800 x 730 x 980 mm (31.5 x 28.7 x 38.6 in.)		
Weight		Less than 65 kg (143 lb.)		
Power Consumption		Less than 100W		
Noise		Less than 75 dB		
Configuration		Console type attached base-unit with Finisher Adapter		
Power Source		From base-unit		
Proof Tray	Stack Capacity*	500 sheets	A4, 8½" x 11" or smaller	
		250 sheets	B4, 8½" x 14" or larger	
	Paper Size	A6 SEF-A3 SEF 5½ " x8½ " - 11”x17”		
	Paper Weight	52 g/m²-256 g/m² 14 lb. Bond- 68 lb. Bond / 140 lb. Index / 90 lb. Cover		
Shift Tray	Stack Capacity*	3000 sheets	A4 LEF, B5 LEF, 8½”x11” LEF	
		1500 sheets	A3, A4, B4, B5 SEF 11”x17”, 8½”x14”, 8½” x 11” SEF	
		500 sheets	A5 LEF, 5½”x8 1/2” LEF	
		100 sheets	A5 SEF, 5½”x8½” SEF	
	Paper Size	A5 - A3 SEF 5½”x8½”- 11”x17”		
	Paper Weight	52 g/m²-256 g/m² 14 lb. Bond - 68 lb. Bond / 140 lb. Index / 90 lb. Cover		

Staples			
Paper Size	B5-A3, 8 1/2”x11”-11”x17”		
Paper Weight	64 g/m²-84 g/m², 17 lb. Bond-20 lb. Bond		
Staple Position	Top, Bottom, 2 Staple, Top-slant		
Staple Replenishment	Cartridge exchange / 5000 pins per cartridge		
Stack Capacity with Stapler			
	Paper Size	**Pages/Set**	**Sets**
	A4, B5 8½"x11"	10-100 pages	200-30 sets
		2-9 pages	150 sets
	A3, B4, 11" x 17", 8½" x 14"	10-50 pages	150-30 sets
		2-9 pages	150 sets

Note: *The capacity to be calculated with 80g/m^2 or 20lb. Bond paper.

Downloaded from www.Manualslib.com manuals search engine

3.6 PUNCH UNIT B531

This punch unit is for the 3000-Sheet Finisher B706. The Punch Units B531 and Output Jogger Unit B513 are also available for this B706.

Punch Unit Types		NA	2/3 holes
		EU	2/4 holes
		Scandinavia	4 holes
Punch Waste Hopper Capacity		NA 2 hole	10,000 sheets
		NA 3 hole	15,000 sheets
		EU 2 hole	40,000 sheets
		EU 4 hole	15,000 sheets
		Scandinavia 4 hole	15,000 sheets
Paper Weight		52 g/m²-127.9 g/m² 14 lb. Bond –34 lb. Bond	
Paper Size	NA 2-holes	SEF	A6 - A3, 5½" x 8½" - 8½"x11"
		LEF	A5 - A4, 5½" x 8½", 8½"x11"
	NA 3-holes	SEF	A3, B4, 11"x17"
		LEF	A4, B5, 8½"x 11"
	EU 2-holes	SEF	A6 - A3, 5½"x8½" - 11"x17"
		LEF	A5 - A4, 5½" x 8½", 8½"" x 11"
	EU 4-holes	SEF	A3, B4, 11" x 17"
		LEF	A4, B5, 8½" x 11"
	Scandinavia 4-holes	SEF	B6 - A3, 5½" x 8½" - 11" x 17"
		LEF	A5 - A4, 5½" x 8½", 8½" x 11"

Downloaded from www.Manualslib.com manuals search engine

3.7 3000-SHEET FINISHER B701

This finisher provides corner stapling only.

Finisher			
Dimension (w x d x h)		657 x 613 x 960 mm	
Weight		Less than 54 kg Less than 56 kg with Punch Unit	
Power Consumption		Less than 96 W	
Noise		Less than 75 dB	
Configuration		Console type attached base-unit	
Power Source		From base-unit	
Proof Tray	Stack Capacity*	250 sheets A4, 8 1/2”x11” or smaller 50 sheets B4, 8 1/2”x14” or larger	
	Paper Size	A5 - A3 SEF, A6 SEF, A6 SEF 5 1/2”x8” 1/2”-11”x17”SEF, 12”x18” SEF	
	Paper Weight	52 g/m²-163 g/m² 14 lb. Bond - 43 lb. Bond / 90 lb. Index / 60 lb. Cover	
Shift Tray	Stack Capacity*	3,000 sheets	A4 LEF, ½" x11” LEF "
		1,500 sheets	A3 SEF, A4 SEF, B4 SEF, B5, 11”x17” SEF, 8½” x14” SEF, 8½” x 11” SEF, 12”x18” SEF
		500 sheets	A5 LEF**
		100 sheets	A5 SEF, B6 SEF, A6 SEF, 5½” x 8½”,SEF
	Paper Size	A5 - A3 SEF, A6 SEF, B6 SEF, 5½” x 8½”- 11”x17” SEF, 12” x 18” SEF	
	Paper Weight	52 g/m²-256 g/m² 14 lb. Bond- 68 lb. Bond / 140 lb. Index / 90 lb. Cover	
Staples			
Paper Size		B5 - A3 8 1/2”x11”-11”x17”, 12”x18”	
Paper Weight		64 g/m²-90 g/m² 17 lb. Bond - 28 lb. Bond	
Staple Position		Top, Bottom, 2 Staple, Top-slant	
Stapling Capacity	Same Paper Size	50 sheets	A4, ½" x11” or smaller
		30 sheets	B4, ½" x14" or larger
	Mixed Paper Size	30 sheets	A4 LEF + A3 SEF, B5 LEF + B4 SEF, 8½" x11” LEF + 11” x17” SEF

Note: *The capacity to be calculated with 80g/m^2 or 20lb. Bond paper.

Downloaded from www.Manualslib.com manuals search engine

Staple Replenishment	Cartridge exchange / 5000 pins per cartridge		
Stapled Stack Capacity (same size)	Paper Size	Pages/Set	Sets
	A4 LEF, 8 1/2”x11” LEF	20-50 pages	150-60 sets
		2-19 pages	150 sets
	A4 SEF, B5, 8 /12”x11” SEF	15-50 pages	100-30 sets
		2-14 pages	100 sets
	Others	15-30 pages	100-33 sets
		2-14 pages	100 sets
Stapled Stack Capacity (mixed sizes)	A4 LEF & A3 SEF, B5 LEF & B4 SEF, 8 1/2”x11” LEF & 11” x17” SEF	2-30 pages	50 set

Downloaded from www.Manualslib.com manuals search engine

3.8 2000-SHEET FINISHER B700

This finisher provides booklet as well as corner stapling. Equipped with two trays, the upper tray holds stapled and shifted copies, and the lower tray holds booklet stapled and folded copies.

Finisher			
Dimension W x D x H		657 x 613 x 960 mm (25.9 x 24.1 x 37.8")	
Weight		Less than 63 kg (138.6 lb.) (no punch unit) Less than 65 kg (143 lb.) (with punch unit)	
Power Consumption		Less than 96 W	
Noise		Less than 75 dB	
Configuration		Console type attached base-unit	
Power Source		From base-unit	
Proof Tray	Stack Capacity*	250 sheets A4, 8 1/2”x11” or smaller 50 sheets B4, 8 1/2”x14 or larger	
	Paper Size	A5-A3 SEF, A6 SEF, A6 LEF 5½" x8½" to11” x 17” SEF, 12”x18” SEF	
	Paper Weight	52 g/m²-163 g/m² 14 lb. Bond - 43 lb. Bond / 90 lb. Index / 60 lb. Cover	
Shift Tray	Stack Capacity*	2,000 sheets	A4 LEF, 8 1/2”x11” LEF
		1,000 sheets	A3 SEF, A4 SEF, B4 SEF, B5 11”x17” SEF, 8½" x14” SEF, 8½" x 11” SEF, 12”x18” SEF
		500 sheets	A5 LEF
		100 sheets	A5 SEF, B6 SEF, A6 SEF, 5½" x8½" SEF
	Paper Size	A5 - A3 SEF, A6 SEF, B6 SEF 5½" x8½" to 11” x 17” SEF, 12” x 18” SEF	
	Paper Weight	52 g/m²-256 g/m² 14 lb. Bond - 68 lb. Bond / 140 lb. Index / 90 lb. Cover	
Staple			
Paper Size		B5-A3, 8 1/2”x11”-11”x17”, 12”x18”	
Paper Weight		64 g/m² - 90 g/m², 17 lb. Bond - 28 lb. Bond	
Staple Position		Top, Bottom, 2 Staple, Top-slant	
Staples Capacity*	Same Paper Size	50 sheets	A4, 8½" x 11” or smaller
		30 sheets	B4, 8½" x 14” or larger
	Mixed Paper Size	30 sheets	A4 LEF & A3 SEF, B5 LEF & B4 SEF, 8½"x11” LEF & 11” x17” SEF
	Booklet Stapling	15 sheets	A4 SEF, A3 SEF, B5 SEF, B4 SEF, 8 1/2”x11” SEF, 8 1/2”x14” SEF, 11”x17” SEF, 12”x18” SEF

Note: *The capacity to be calculated with 80g/m^2 or 20lb. Bond paper.

Downloaded from www.Manualslib.com manuals search engine

Staple Replenishment		Corner staple	5,000 staples per cartridge
		Booklet staple	2,000 staples per cartridge
Corner Staple Capacity	Same Size	A4 LEF, 8 1/2”x11” LEF	13-50 pages
			2-12 pages
		A4 SEF, B5, 8 /12”x11” SEF	10-50 pages
			2-9 pages
		Others	10-30 pages
			2-9 pages
	Mixed Size	A4 LEF + A3 SEF B5 LEF + B4 SEF 8 1/2”x11” LEF + 11” x17” SEF	2-30 pages
Booklet Staple Capacity	A4 SEF, A3 SEF, B5 SEF, B4 SEF 8 1/2”x11” SEF, 8 1/2”x14” SEF, 11”x17” SEF 12”x18” SEF		2-5 pages
			6-10 pages
			11-15 pages

B700/B701 Paper Specifications

Paper Size	Plain Paper			Paper Type	
	Copier PPC	Used Paper	Recycled Paper	Colored Paper	Translucent Blueprint
A3 SEF	●	—	●	●	▲
B4 SEF	●	▲	●	●	▲
A4 SEF	●	▲	●	●	▲
A4 LEF	✇	▲	✇	✇	▲
B5 SEF	●	▲	●	●	▲
B5 LEF	✇	▲	✇	✇	▲
A5 SEF	❍	—	—	—	—
A5 LEF	❍	—	—	—	—
B6 SEF	▲	—	—	—	—
B6 LEF	▲	—	—	—	—
12" x 18" SEF	●	—	●	●	—
11" x 17" SEF	●	—	●	●	▲
8½" x 14"	●	—	●	●	▲
8½" x 11" SEF	●	—	●	●	▲
8½" x 11" LEF	✇	—	✇	✇	▲
5½" x 8½"	❍	—	—	❍	—
5½" x 8½"	❍	—	—	❍	—

✇ Corner stapling, Shift, YES
● Booklet stapling/folding, Shift, YES
❍ Shift ONLY
▲ Shift NO
— Not available

Downloaded from www.Manualslib.com manuals search engine

3.9 PUNCH UNIT B702

This punch unit is designed for use with the 2000-Sheet Stapler B700 (both corner and booklet stapling) and 3000-Sheet Stapler B701 (corner stapling only).

Available Punch Units		NA	2/3 hole switchable
		~~EU~~	~~2/4 holes switchable~~
		~~Scandinavia~~	~~4 holes~~
Punch Waste Replenishment		NA 2-hole	Up to 5,000 sheets
		NA 3-hole	Up to 5,000 sheets
		~~EU 2-hole~~	~~Up to 14,000 sheets~~
		~~EU 4-hole~~	~~Up to 7,000 sheets~~
		~~Scandinavia 4-hole~~	~~Up to 7,000 sheets~~
Paper Weight		52 g/m²-163 g/m², 14 lb. Bond - 43 lb. Bond / 90 lb. Index / 60 lb. Cover	
Paper Sizes	NA 2-hole	SEF	A5 to A3, 5½" x8½" to 11"x17"
		LEF	A5 - A4, 5½" x 8½" , 8½" x 11"
	NA 3-hole	SEF	A3, B4, 11"x17"
		LEF	A4, B5, 8½" x 11"
	~~EU 2-hole~~	~~SEF~~	~~A5 - A3, 5½" x 8½" to 11" x 17"~~
		~~LEF~~	~~A5 to A4, 5½" x 8½", 8½" x 11"~~
	~~EU 4-hole~~	~~SEF~~	~~A3, B4, 11"x17"~~
		~~LEF~~	~~A4, B5, 8½" x 11"~~
	~~Scandinavia 4-hole~~	~~SEF~~	~~A5 to A3, 5½" x 8½" to 11" x 17"~~
		~~LEF~~	~~A5 - A4, 5½" x8½", 8½" x 11"~~

Downloaded from www.Manualslib.com manuals search engine

3.10 A3/11" X 17" TRAY B331

This option is installed in Tray 1 (tandem tray) of the copier so Tray 1 can feed larger paper. Tray 1 normally feeds LT or A4 only.

Dimension (w x d x h)	495 x 215 x 535 mm (19.5 x 8.5 x 21.1 in.)
Weight	11 kg (24.2 lb.)
Paper Size	A3 SEF, B4 SEF, A4 11”x17” SEF, 8½" x 14” SEF, 8½" x 11”
Paper Capacity	1,000 Sheets

3.11 COPY TRAY B756

The copy tray is installed receive copies when the copier is used without a finisher.

Dimension (w x d x h)	400 x 335 x 70 mm (15.8 x 13.2 x 2.8 in.)	
Weight	640 g (1.4 lb.)	
Paper Capacity	500 Sheets	A4, 8½” x 11”
	250 Sheets	A3, 11”x 17”

Downloaded from www.Manualslib.com manuals search engine

4. MACHINE CONFIGURATION

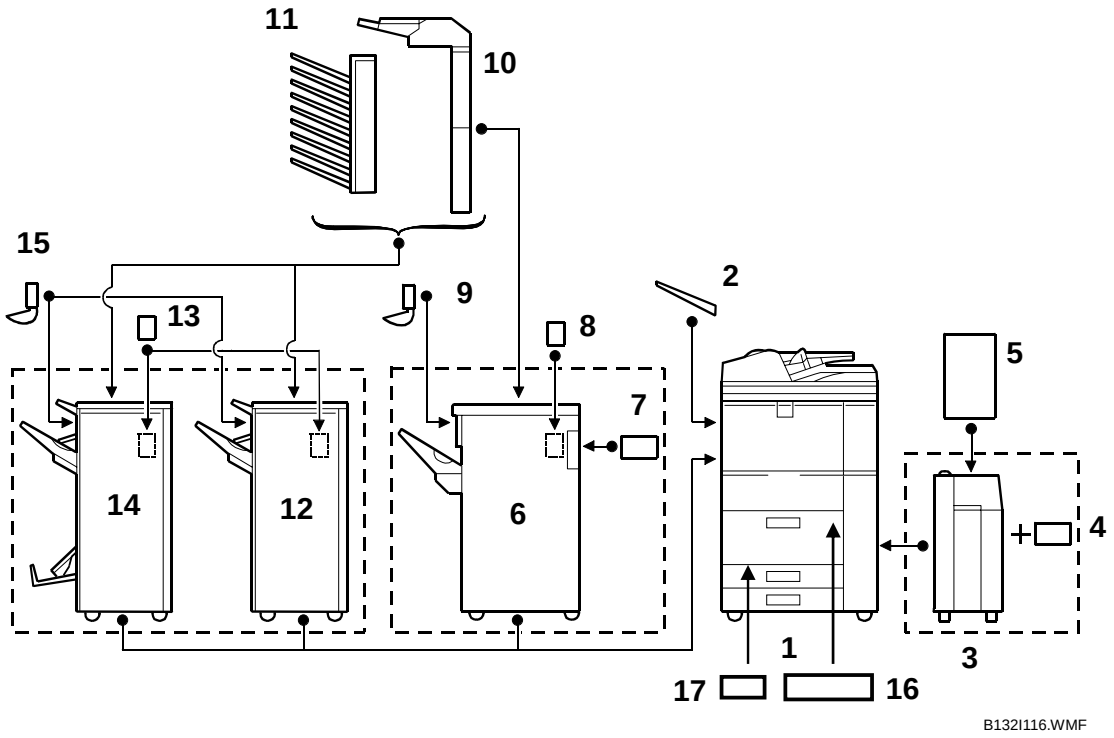

This is a list of the peripheral devices that can be installed with the copier.

No.	Model	Name	Comments
1	B132 B200	e-STUDIO4500c e-STUDIO5500c	Main machine (Copier)
2	B756	Copy Tray Type 2075	Attached to main machine
3	B473	LCT RT43	Large capacity tray
4	B699	LCT Adapter Type B	Required for LCT
5	B474	81/2" x 14"/B4 Paper Size Tray Type 1075	LCT Option
6	B706	3000-Sheet Finisher SR842	No saddle-stitching (100-sheet stapling)
7	B698	Finisher Adapter Type B	Replacement motor for B706
8	B531	Punch Unit Type 1075	For B706 only
9	B513	Output Jogger Unit Type 1075	For B706 only.
10	B704	Cover Interposer Tray Type 3260	For B700, B701, B706
11	B762	Mailbox CS391	For B700, B701 only
12	B701	3000-Sheet Finisher SR970	No saddle-stitching, Tray x1, 50-sheet stapling
13	B702	Punch Unit Type 3260	For B700, B701
14	B700	2000-Sheet Booklet Finisher SR4000	Saddle-stitching, Trays x2, 50-sheet stapling
15	B703	Output Jogger Unit Type 3260	For B700, B701
16	B331	A3 /11"x17" Paper Size Tray Type 2105	For Tandem Tray (Tray 1)
17	B499	Tab Sheet Holder Type 3260	
-	B328	Copy Connector Type 3260	
-	B735	DataOverwriteSecurity Unit Type C	
-	B761	PostScript3 Unit Type 3260	
-	B737	Printer/Scanner Unit GM-2100	
-	G815	EFI Printer Controller E-7000	

Downloaded from www.Manualslib.com manuals search engine

4.1 ELECTRICAL COMPONENTS

4.1.1 COPIER

No.	Component	Function
CIRCUIT BREAKER		
CB1	Circuit Breaker	Breaks the main power supply to the machine if there is an overload or short circuit.
COUNTERS		
TC1	Total Counter - FC	The mechanical counter for full color printing.
TC2	Total Counter - K	The mechanical counter for black-and-white printing.
HEATERS		
H1	Lower Tray Heater	Keeps paper dry. Provided with machine, connection is optional.
H2	Anti-condensation Heater – Scanner (Not provided)	Prevents the formation of condensation in the scanner unit.
H3	Anti-condensation Heater – Transfer	This options removes moisture from the air around the paper transfer unit.
H4	Upper Tray Heater	Keeps paper dry. Provided with machine, connection is optional.
HARD DISKS		
HDD1	HDD 1	The HDDs hold temporary files spooled for processing and also store permanent files for the document server application.
HDD2	HDD 2	2nd HDD in a set of 4.
HDD3	HDD 3	3rd HDD in a set of 4.
HDD4	HDD 4	4th HDD in a set of 4.
LAMPS		
L1	Exposure Lamp	Projects high intensity light on the original for exposure.
L2	Heating Roller Fusing Lamp 1	590W fusing lamp in the heating roller.
L3	Heating Roller Fusing Lamp 2	590W fusing lamp in the heating roller.
L4	Hot Roller Fusing Lamp	350W fusing lamp inside the hot roller.
L5	Pressure Roller Fusing Lamp	350W fusing lamp inside the pressure roller.

Downloaded from www.Manualslib.com manuals search engine

No.	Component	Function
MOTORS		
M1	Scanner Motor	Drives the scanner unit
M2	Lower Relay Motor	Drives the lower relay roller of the relay unit at the vertical transport section.
M3	Paper Feed Motor - Tray 1	Drives the paper feed roller and grip roller of tray 1 (tandem tray).
M4	Paper Feed Motor - Tray 3	Drives the paper feed roller and grip roller of tray 3 (bottom tray).
M5	Paper Feed Motor - Tray 2	Drives the paper feed roller and grip roller of tray 2 (middle tray).
M6	Waste Toner Distribution Motor	Drives the coil that spans the top of the waste toner bottle.
M7	Lift Motor - Tray 2	Switches on and drives a shaft and coupling that raises a lift arm against the bottom plate under the paper stack in tray 2
M8	Lift Motor - Tray 3	Drives a shaft and coupling that raises a lift arm against the bottom plate under the paper stack in tray 3.
M9	Lift Motor - Tray 1	Drives pulleys and cables that lift the bottom plate of tray 1 (tandem tray) until the top of the paper stack reaches the correct height for feeding.
M10	Rear Fence Motor - Tray 1	Switches on when the right paper tray sensor of the tandem paper tray unit detects paper out and the left paper tray sensor detects paper present.
M11	ITB Lift Motor	Rotates the cam that raises and lowers the ITB belt.
M12	Ozone Fan Motor	Draws air from around the drums and through the ozone filter.
M13	Fusing Fan Motor	Cools the fusing unit.
M14	Fusing Cooling Fan Motor	Draws cool air into the fusing unit through a vent and past a heat sink mounted above the fusing unit.
M15	Fusing Exhaust Fan Motor	Draws the hot air away from the heat sink mounted above the fusing unit and expels the hot air through a vent
M16	Fusing/Exit Motor	Drives the fusing unit and paper exit.
M17	PTR Motor	Drives the paper transfer roller (PTR).
M18	Bypass Feed Motor	Drives the upper relay roller that feeds each sheet to the registration roller.
M19	Duplex Jogger Motor	Moves the jogger fences in the duplex unit.
M20	Duplex Unit Fan Motor	Cools the duplex unit.
M21	Duplex Transport Motor	Drives transport rollers 3, 4 in the duplex unit.
M22	Duplex Inverter Motor	Feeds paper to the jogger section.
M23	Registration Motor	Rotates the registration roller.
M24	Image Transfer Fan Motor	Cools the upper area of the transfer unit where the PCUs contact the ITB.
M25	Pipe Cooling Fan Motor	Pulls in air draws it over the fins attached to the front end of the heat pipe roller.
M26	Paper Transport Fan Motor - Rear	1 of 2 vacuum fans that produce suction to kepp paper on the transport belt.
M27	Paper Transport Fan Motor - Front	1 of 2 vacuum fans that produce suction to kepp paper on the transport belt.
M28	Paper Exit Fan Motor	Draws hot air from around the paper exit area and expels it from the left side of the machine.

Downloaded from www.Manualslib.com manuals search engine

No.	Component	Function
M29	Front Duplex Fan Motor	Draws hot air out of the duplex unit.
M30	Rear Duplex Fan Motor	Draws hot air out of the duplex unit.
M31	ID Sensor Dust Fan Motor	Blows air around the ID sensors to prevent dust from collecting.
M32	Peltier Cooling Fan Motor	Draws dehumidified air out of the Peltier unit and sends it through a duct to the four PCU cooling fans.
M33	Peltier Circulation Fan Motor	Draws that passes below the Peltier unit to cool it.
M34	Laser Unit Cooling Fan Motor - Front	Draws cool air into the machine.
M35	Laser Unit Cooing Fan Motor - Rear	Expels hot air from the machine on the left side.
M36	PCU Motor - M	Drives all the rollers in the Magenta PCU.
M37	PCU Motor - K	Drives all the rollers in the Black PCU.
M38	PCU Motor - Y	Drives all the rollers in the Yellow PCU.
M39	PCU Motor - C	Drives all the rollers in the Cyan PCU.
M40	Controller Box Exhaust Fan Motor 2	1 of 2 fans that cool the printed circuit boards at the back of the machine.
M41	Controller Box Exhaust Fan Motor 1	1 of 2 fans that cool the printed circuit boards at the back of the machine.
M42	Drum Motor - Y	Drives the drum in the Yellow PCU.
M43	Drum Motor - C	Drives the drum in the Cyan PCU.
M44	Drum Motor - M	Drives the drum in the Magenta PCU.
M45	Drum Motor - K	Drives the drum in the Black PCU.
M46	ITB Drive Motor	Rotates the image transfer roller that drives the ITB.
M47	3rd Mirror Motor - M	Fine adjusts the position of the 3rd mirror of the optics for M (magenta) during MUSIC adjustment.
M48	Polygon Motor	Rotates the polygon mirror in the laser optics unit
M49	3rd Mirror Motor - Y	Fine adjusts the position of the 3rd mirror of the optics for Y (Yellow) during MUSIC adjustment.
M50	3rd Mirror Motor - C	Fine adjusts the position of the 3rd mirror of the optics for C (Cyan) during MUSIC adjustment.
M51	Toner Hopper Motor	Drives the **toner** pump clutch and toner supply clutch of each PCU.
M52	PCU Fan Motor - Y	Cools the Yellow PCU.
M53	PCU Fan Motor - C	Cools the Cyan PCU.
M54	PCU Fan Motor - M	Cools the Magenta PCU
M55	PCU Fan Motor - K	Cools the Black PCU.
M56	Scanner Unit Fan Motor - Rear Left	Cools the left, rear corner of the SIOB.
M57	Scanner Unit Fan Motor - Rear Center	Cools the rear, center area of the SIOB.
M58	Scanner Unit Fan Motor - Front Left	Cools the front, left area of the SIOB.
M59	Scanner Unit Fan Motor - Right	Exhausts warm air from the SIOB area.
M60	Waste Toner Distribution Motor	Drives the waste toner bottle transport coil that moves the toner from the central collection point into the waste toner bottle.

Downloaded from www.Manualslib.com manuals search engine

No.	Component	Function
MECHANICAL CLUTCHES		
MC1	Bypass Feed Clutch	Engages and operates the pick-up roller at the bypass tray.
MC2	Toner Pump Clutch - M	Engages the and drives the Magenta toner pump to pull toner from the Magenta STC.
MC3	Toner Supply Clutch - M	Engages the toner supply coils in the sub hopper of the Magenta PCU to send toner to the development unit below.
MC4	Toner Pump Clutch - K	Engages the and drives the Black toner pump to pull toner from the Black STC.
MC5	Toner Supply Clutch - K	Engages the toner supply coils in the sub hopper of the Black PCU to send toner to the development unit below.
MC6	Toner Pump Clutch - Y	Engages the drive shaft and rotor of the Yellow toner pump to pull toner from the Yellow STC when more toner is needed.
MC7	Toner Supply Clutch - Y	Engages the toner supply coils in the sub hopper of the Yellow PCU to send toner to the development unit below.
MC8	Toner Pump Clutch - C	Engages the and drives the Cyan toner pump to pull toner from the Cyan STC.
MC9	Toner Supply Clutch - C	Engages the toner supply coils in the sub hopper of the Cyan PCU to send toner to the development unit below.

Downloaded from www.Manualslib.com manuals search engine

No.	Component	Function
PCBs		
PCB1	PFC (Paper Feed Control)	Controls paper feed.
PCB2	AC Drive Board	Controls the power supply to the fusing lamps, heaters, and PSU.
PCB3	PSU (Power Supply Unit)	Supplies DC current to the machine and contains the AC drive that controls the fusing lamp power supply.
PCB4	DRB (Drive Board)	Contains the circuits for the stepping motors that drive the printer engine, and distributes electrical power to all other PCBs.
PCB5	IOB (Input/Output Board)	The I/O control board controls 1) Input and output ports for all sensors, motors, solenoids of the engine, 2) drivers, 3) high voltage power supply for PWM, and 4) analog input signals.
PCB6	Power Pack: Development Bias	Supplies the voltage for the bias applied to the developer in the PCUs by the development rollers.
PCB7	Power Pack: Charge	Supplies the voltage for the charge applied to the OPC drums by the charge roller.
PCB8	Power Pack: Transfer	Supplies charge to 1) the four image transfer rollers that pull the toner images from the four from the four drums (Y, M, C, K), and 2) to the paper transfer roller that pulls the image off the ITB onto paper.
PCB9	Power Pack - Separation	Supplies the dc/ac charges for paper separation.
PCB10	DMB (Drum Motor Board)	Controls the motors that drive the OPC drums.
PCB11	TMB (Transfer Motor Board)	Controls the motor that drives the ITB.
PCB12	Potential Sensor Board	Processes data from the Y, M, C, K, potential sensors.
PCB13	PPB (Peltier Board)	Controls the operation of the Peltier unit.
PCB14	CNB (Connector Board)	Sorts and routes signals to electrical components.
PCB15	IDCB - C1	One of two ID control boards at the base of the Cyan STC. The CPU reads the board to confirm that the correct STC is inserted into the correct bin.
PCB16	IDCB - M1	One of two ID control boards at the base of the Magenta STC. The CPU reads the board to confirm that the correct STC is inserted into the correct bin.
PCB17	IDCB - K1	One of two ID control boards at the base of the Black STC. The CPU reads the board to confirm that the correct STC is inserted into the correct bin.
PCB18	IDCB - Y1	One of two ID control boards at the base of the Yellow STC. The CPU reads the board to confirm that the correct STC is inserted into the correct bin.
PCB19	SBU (Sensor Board Unit)	Contains the CCD. Converts CCD analog signals to digital signals.
PCB20	SIOB (Scanner Interface Board)	Controls all the sensors in the scanner unit and controls the carriage drive stepping motors.
PCB21	Lamp Regulator	Converts the ac power input to a stable, high frequency ac output to the exposure lamp.

Downloaded from www.Manualslib.com manuals search engine

No.	Component	Function
PCB22	BICU	Performs: 1) Engine sequence control (all sensors, motors, fusing temperature monitoring circuits), 2) Scanning control, 3) Exposure control, 3) Image processing control, 4) GW controller I/F, 5) Peripheral timing control
PCB23	LD 1 (2/2)	Laser Diode 1, 2nd of a pair, 1 of 8.
	LD 1 (1/2)	Laser Diode 1, 1st of a pair, 1 of 8.
PCB24	LD 2 (2/2)	Laser Diode 2, 2nd of a pair, 1 of 8.
	LD 2 (1/2)	Laser Diode 2, 1st of a pair, 1 of 8.
PCB25	LD 3 (2/2)	Laser Diode 3, 2nd of a pair, 1 of 8.
	LD 3 (1/2)	Laser Diode 3, 1st of a pair, 1 of 8.
PCB26	LD 4 (2/2)	Laser Diode 4, 2nd of a pair, 1 of 8.
	LD 4 (1/2)	Laser Diode 4, 1st of a pair, 1 of 8.
PCB27	LSDB - K Front	Front Laser Synchronization Detector Board for Laser Diode 4.
PCB28	LSDB - M Front	Front Laser Synchronization Detector Board for Laser Diode 3.
PCB29	LSDB - C Front	Front Laser Synchronization Detector Board for Laser Diode 2.
PCB30	LSDB - Y Front	Front Laser Synchronization Detector Board for Laser Diode 1.
PCB31	LSDB - Y Rear	Rear Laser Synchronization Detector Board for Laser Diode 1.
PCB32	LSDB - C Rear	Rear Laser Synchronization Detector Board for Laser Diode 2.
PCB33	LSDB - M Rear	Rear Laser Synchronization Detector Board for Laser Diode 3.
PCB34	LSDB - K Rear	Rear Laser Synchronization Detector Board for Laser Diode 4.
PCB35	Controller Board	Incorporates the GW architecture, and connects to the BICU and PCI I/F. All the options for the printer are controlled by this board.
PCB36	Mother Board	Interfaces the controller and the BICU.
PCB37	RAPI EXT Board	Interface the copy connector and EFI controller.
PCB38	OPU (Operation Panel Unit)	Controls the operation panel.
PCB39	PI Board	Interfaces the IPU and RDS.

Downloaded from www.Manualslib.com manuals search engine

No.	Component	Function
QUENCHING LAMPS		
QL1	Quenching Lamp - K	Eliminates electrical charge and neutralizes the surface of the drum in the Black PCU.
QL2	Quenching Lamp - C	Eliminates electrical charge and neutralizes the surface of the drum in the Cyan PCU.
QL3	Quenching Lamp - M	Eliminates electrical charge and neutralizes the surface of the drum in the Magenta PCU.
QL4	Quenching Lamp - Y	Eliminates electrical charge and neutralizes the surface of the drum in the Yellow PCU.

No.	Component	Function
SENSORS		
S1	ID Sensor - Black	Reads 1) light reflected from the bare surface of the ITB, and 2) reads light reflected from the black ID sensor patterns on the ITB.
S2	ID Sensor - Color	Reads 1) light reflected from the bare surface of the ITB, and 2) reads light reflected from the color ID sensor patterns on the ITB. This sensor has one additional receptor to collect diffuse light reflected from color toner to improve calculation of the toner density.
S3	ITB Lift Sensor	This sensor switches the ITB lift motor off when the ITB comes into contact the drums of the four PCUs.
S4	MUSIC Sensor - Center	Reads the center MUSIC pattern. This feedback is used to control the MUSIC process to correct color registration errors.
S5	MUSIC Sensor - Front	Reads the front MUSIC pattern. This feedback is used to control the MUSIC process to correct color registration errors.
S6	MUSIC Sensor - Rear	Reads the Rear MUSIC pattern. This feedback is used to control the MUSIC process to correct color registration errors.
S7	Paper Feed Sensor - Tray 2	Detects the leading edge of each sheet of paper from the pick–up roller of tray (middle tray) and switches off the pick–up roller solenoid so the pick–up roller lifts.
S8	Vertical Transport Sensor - Tray 2	Detects the leading edge and trailing edge of each sheet fed from tray 2 and signals a jam if the edges do not pass at the prescribed time.
S9	Paper End Sensor - Tray 2	Receives light reflected from the paper until the last sheet is fed from tray 2 (middle tray), then signals paper end.
S10	Lift Sensor - Tray 2	Detects when the pick− up roller (pushed up by the top of the paper stack in the right side of the tandem tray) has reached the correct height for paper feed and then switches off the tray 2 (middle tray) lift motor.
S11	Paper Feed Sensor - Tray 3	Detects the leading edge of each sheet of paper from the pick–up roller of tray 3 (bottom tray) and switches off the pick–up roller solenoid so the pick–up roller lifts.

Downloaded from www.Manualslib.com manuals search engine

No.	Component	Function
S12	Vertical Transport Sensor - Tray 3	Detects the leading edge and trailing edge of each sheet fed from tray 3 and signals a jam if the edges do not pass at the prescribed time.
S13	Paper End Sensor - Tray 3	Receives light reflected from the paper until the last sheet is fed from tray 3 (bottom tray), then signals paper end.
S14	Lift Sensor - Tray 3	Detects when the pick− up roller (pushed up by the top of the paper stack in the right side of the tandem tray) has reached the correct height for paper feed and then switches off the tray 3 (bottom tray) lift motor.
S15	Bottom Temperature/Humidity Sensor	Near the waste toner bottle. Detects ambient temperature and humidity and then this output is used to control the amount of current applied to the paper transfer roller and ITB when the image is transferred to paper. Also used to correct the fusing temperature, and to extend the fusing unit idle time at low room temperatures.
S16	Waste Toner Bottle Set Sensor	Detects the position of the waste toner bottle and confirms whether it is set correctly.
S17	Waste Toner Bottle Near-Full Sensor	When the level of the waste toner rises high enough to move the actuator of this sensor out of its normal position, the sensor signals the machine that the waste toner bottle is nearly full.
S18	Waste Toner Bottle Full Sensor	Signals an alert when the waste toner bottle is full.
S19	Paper Feed Sensor - Tray 1	Detects the leading edge of each sheet of paper from the pick–up roller of tray 1 (tandem tray) and switches off the pick–up roller solenoid so the pick–up roller lifts.
S20	Vertical Transport Sensor - Tray 1	Detects the leading edge and trailing edge of each sheet fed from tray 1, 2, and 3 and signals a jam if the edges do not pass at the prescribed time.
S21	Paper End Sensor - Tray 1	Detects when the last sheet is fed from tray 1.
S22	Lift Sensor - Tray 1	Detects when the pick− up roller (pushed up by the top of the paper stack in the right side of the tandem tray) has reached the correct height for paper feed and then switches off the tray 1 (tandem tray) lift motor.
S23	Paper Near End Sensor - Tray 2	Detects the near end condition for tray 2 (middle tray, a universal cassette).
S24	Paper Near End Sensor - Tray 3	Detects the near end condition for tray 3 (middle tray, a universal cassette).
S25	Front Side Fence Open Sensor	Detects the actuator on the front side fence after it has reached the open position in the tandem tray.
S26	Front Side Fence Closed Sensor	Detects the actuator on the front side fence after it has reached the closed position in the tandem tray.
S27	Rear Side Fence Open Sensor	Detects the actuator on the rear side fence after it has reached the open position in the tandem tray.
S28	Rear Side Fence Closed Sensor	Detects the actuator on the rear side fence after it has reached the closed position in the tandem tray.
S29	Right Tray Down Sensor	Detects the bottom plate of the right tray and switches off the tray 1 lift motor and stops the bottom plate.

Downloaded from www.Manualslib.com manuals search engine

No.	Component	Function
S30	Paper Near End Sensor - Tray 1	Signals 10% paper remaining when the actuator on the right rail of the right tray in the tandem tray passes.
S31	Paper Height Sensor	Signals 100% paper remaining until activated. Signals 50% paper remaining when the actuator on the left rail of the right tray in the tandem tray passes.
S32	Paper Height Sensor	Signals 30% paper remaining when the actuator on the left rail of the right tray in the tandem tray passes.
S33	Paper Height Sensor	When near end sensor 1 on right rail of the right tray of the tandem tray is actuated, and paper height sensor 3 has detected the passing of the actuator on the left rail, then the near end sensor signals 10% paper remaining.
S34	Right Tray Paper Sensor	Detects paper in the right side of the tandem paper tray.
S35	Rear Fence HP Sensor	Detects the actuator on the rear fence in the tandem tray and switches off the rear fence motor.
S36	Rear Fence Return Sensor	Detects the actuator on the rear fence in the tandem tray and reverses the rear fence motor.
S37	Left Tray Paper Sensor	Detects the presence of paper in the left tray of the tandem tray.
S38	Heating Roller Temperature Sensor	Monitors the surface temperature of the heating roller and breaks the circuits to the fusing lamps if the heating roller overheats.
S39	Waste Toner Lock Sensor	Signals an alert if the waste toner collection coil locks and stops rotating.
S40	Duplex Transport Sensor 1	The feeler of this sensor detects the leading edge and trailing edge of each sheet as it passes from the jogger unit above and into the horizontal feed path of the duplex unit below. Signals a jam if the paper does not arrive at or reach the sensor location at the prescribed time.
S41	Duplex Inverter Sensor	1) Detects the leading edge of the paper at the inverter exit roller, signals to switch off the duplex transport clutch and retracts the reverse trigger roller, and 2) Controls the operation of the duplex transport clutch.
S42	Duplex Entrance Sensor	Detects paper jams at the entrance of the duplex unit.
S43	Duplex Transport Sensor 3	Detects the leading edge and trailing edge of each sheet as it passes from the jogger unit above through the horizontal feed path of the duplex unit below. Signals a jam if the paper does not arrive at or reach the sensor location at the prescribed time.
S44	Duplex Transport Sensor 2	Detects the leading edge and trailing edge of each sheets as it passes from the jogger unit above and into the horizontal feed path of the duplex unit below. Signals a jam if the paper does not arrive at or reach the sensor location at the prescribed time.
S45	Duplex Jogger HP Sensor	At power on, detects the actuators on the jogger fences of the duplex unit, switches off the duplex jogger motor and stops the fences at their home positions.

Downloaded from www.Manualslib.com manuals search engine

No.	Component	Function
S46	Double-Feed Sensor	Receives the light emitted from the double− feed detection LED and reflected from the surface of each sheet in the paper path. Signals an error if the thickness of the paper is not the same as the previous sheet.
S47	Guide Plate Position Sensor	
S48	Relay Sensor	Detects jams at the top of the vertical paper path.
S49	Registration Sensor	Detects the leading edge of the paper and switches off the registration motor and stops the registration roller briefly but long enough to correct buckle the paper.
S50	Paper Exit Sensor	Detects the leading and trailing edge of each sheet at the paper exit slot to check timing and detect jams.
S51	Bypass Paper Sensor	Detects the presence of paper in the bypass tray.
S52	Bypass Paper End Sensor	Signals paper out when the last sheet feeds from the bypass tray.
S53	Bypass Paper Size Sensor	Reads the positions of the side fences (manually adjusted) to detect the width of the paper in the bypass tray. (Paper length is read with pulse counts from the registration sensor.)
S54	Paper Exit Relay Sensor	Detects paper jams at the paper exit if the paper does not arrive or leave the machine at the prescribed time.
S55	Copy Tray Full Sensor (Option)	Detects when the Copy Paper Tray B75 is full and temporarily pauses printing so the operator can remove the stack from the tray and continue.
S56	TD Sensor - M	Monitors the amount of toner in the developer/toner mixture in the development unit of the Magenta PCU.
S57	TD Sensor - K	Monitors the amount of toner in the developer/toner mixture in the development unit of the Black PCU.
S58	Temperature/Humidity Sensor - PCU K	The temperature and humidity readings of this sensor are referenced to a lookup table stored in the ROM to 1) Correct the charge roller voltage 2) Adjust the operation of the Peltier unit, and 3) Set the length of time the agitators in the development unit rotate to mix the toner and developer.
S59	TD Sensor - Y	Monitors the amount of toner in the developer/toner mixture in the development unit of the Yellow PCU.
S60	TD Sensor - C	Monitors the amount of toner in the developer/toner mixture in the development unit of the Cyan PCU.
S61	ITB Position Sensor 2	Reads the encoder film strip on the front edge of the ITB and sends the sub scan scale signal to the CPU.
S62	ITB Position Sensor 1	Reads the encoder film strip on the front edge of the ITB and sends the main scan scale signal to the CPU.
S63	Potential Sensor - K	Reads the potential sensor pattern from the surface of the drum in the black PCU.
S64	Potential Sensor - M	Reads the potential sensor pattern from the surface of the drum in the magenta PCU.
S65	Potential Sensor - C	Reads the potential sensor pattern from the surface

Downloaded from www.Manualslib.com manuals search engine

No.	Component	Function
		of the drum in the cyan PCU.
S66	Potential Sensor - Y	Reads the potential sensor pattern from the surface of the drum in the yellow PCU.
S67	Temperature Sensor - Optics 1	1 of 2 sensors (located near the left f-theta lens) that monitors the temperature in the optics unit. The results are used in the MUSIC process.
S68	Temperature Sensor - Optics 2	1 of 2 sensors (located near the right f-theta lens) that monitors the temperature in the optics unit. The results are used in the MUSIC process.
S69	Toner End Sensor - M	Detects toner end for magenta toner.
S70	Toner End Sensor - K	Detects toner end for black toner.
S71	Toner End Sensor - Y	Detects toner end for yellow toner.
S72	Toner End Sensor - C	Detects toner end for cyan toner.
S73	Scanner HP Sensor	Detects the home position of the scanner.
S74	Original Width Sensors	APS1 (a board) holds two original width sensors under the exposure glass. The detection combinations of these sensors determine the width of the original on the exposure glass positioned for LEF.
S75	Original Length Sensors - 1	APS2 (a board) holds two original length sensors under the exposure glass. The detection combinations of these sensors determine the length of the original on the exposure glass positioned for SEF.
S76	Original Length Sensor -2	APS3 (a board) holds one original length sensor under the exposure glass. The detection combination of this sensor and other sensors determine the length of the original on the exposure glass positioned for SEF.
S77	Accordion Jam Sensor	Detects jams at the fusing exit by confirming that paper arrives at the prescribed time.
S78	Fusing Exit Sensor	Detects jams at the fusing exit by confirming that paper leaves at the prescribed time.
S79	LCT Relay Sensor	Confirms whether the LCT is set correctly.

No.	Component	Function
LEDs		
LED1	Double-Feed Detection LED	Emits light which is reflected from the paper to the double− feed sensor to test the translucence of each sheet for double-feed detection.
LED2	Accordion Jam Sensor (LED)	Flashes to show the user which lever to release to remove a paper jam from the fusing rollers.
LED3	Fusing Exit Sensor (LED)	Flashes to show the user which lever to release to remove a paper jam from the fusing unit.

Downloaded from www.Manualslib.com manuals search engine

No.	Component	Function
SOLENOIDS		
SOL1	Pick− up Solenoid - Tray 2	Switches on when the tray 2 (middle tray) lift motor switches on. This solenoid lowers the pick–up roller of tray 3.
SOL2	Separation Roller Solenoid - Tray 2	When tray 2 (middle tray) is selected as the paper source, this solenoid energizes and brings the separation roller in contact with the feed roller until the leading edge of the sheet feeds to the paper feed sensor.
SOL3	Pick− up Solenoid - Tray 3	Switches on when the tray 3 (bottom tray) lift motor switches on. This solenoid lowers the pick–up roller of tray 3.
SOL4	Separation Roller Solenoid - Tray 3	When tray 3 (bottom tray) is selected as the paper source, this solenoid energizes and brings the separation roller in contact with the feed roller until the leading edge of the sheet feeds to the paper feed sensor.
SOL5	Pick− up Solenoid - Tray 1	Switches on when the tray 1 (tandem tray) lift motor switches on. This solenoid lowers the pick–up roller of tray 1.
SOL6	Separation Roller Solenoid - Tray 1	When tray 1 (tandem tray) is selected as the paper source, this solenoid energizes and brings the separation roller in contact with the feed roller until the leading edge of the sheet feeds to the paper feed sensor.
SOL7	Front Side Fence Solenoid -Tray 1	When the right tray paper sensor in the tandem tray signals paper out, and the left tray paper sensor signals paper present, this energizes this solenoid which pulls open the front side fence until the front side fence open sensor detects the actuator of the front side fence and switches off the solenoid, leaving it locked in the open position, to allow the rear fence to push the paper stack from the left tray into the right tray.
SOL8	Rear Side Fence Solenoid - Tray 1	When the right tray paper sensor in the tandem tray signals paper out, and the left tray paper sensor signals paper present, this energizes this solenoid which pulls open the rear side fence until the rear side fence open sensor detects the actuator of the rear side fence and switches off the solenoid, leaving it locked in the open position, to allow rear fence to push the paper stack from the left tray into the right tray.
SOL9	Right Tray Lock Solenoid - Tray 1	Releases the lock lever when the left tray paper sensor in the tandem tray signals that there is no paper in the left tray .
SOL10	Left Tray Lock Solenoid - Tray 1	When the rear fence motor in the tandem tray switches on, this energizes the left tray lock solenoid. This locks the left tray so it does not move while the rear fence pushes the stack from the left tray to the right tray.
SOL11	Duplex Junction Gate Solenoid	Controls the opening and closing of the duplex junction gate at the mouth of the inverter unit.
SOL12	Positioning Roller Solenoid	After a sheet has been aligned by the fences of the duplex unit, this solenoid energizes and pushes down the positioning roller (a sponge roller).
SOL13	Guide Plate Solenoid	Energizes when a jam occurs between the vertical transport rollers and registration roller to force the guide plate open and divert paper fed from below into the duplex tray.
SOL14	Inverter Junction Gate Solenoid	Operates the inverter junction gate. The inverter injunction gate turns paper into the path to the inverter unit below where it is 1) inverted for face− down output or 2) inverted for 2nd side printing.

Downloaded from www.Manualslib.com manuals search engine

No.	Component	Function
SOL15	Bypass Pick− up Solenoid	Switches on and lowers the pick− up roller to the top of the stack in the bypass tray

No.	Component	Function
SWITCHES		
SW1	Lower Front Door Switch	Detects whether the front door is open or closed.
SW2	Main Power Switch	Switches the machine off and on.
SW3	Upper Front Door Switches (x5)	Detect whether the front door is open or closed.
SW4	Paper Size Switch - Tray 2	The switch detects the position of the dial (set manually), and signals the paper size with a simple 5− digit binary code.
SW5	Paper Size Switch - Tray 3	The switch detects the position of the dial (set manually), and signals the paper size with a simple 5− digit binary code.

No.	Component	Function
THERMISTORS		
TH1	Heating Roller Thermistor	Monitors the end of the heating roller and breaks the circuit to the heating lamps if a lamp overheats.
TH2	Hot Roller Thermistor	Detects and monitors the temperature of the hot roller for fusing temperature control.
TH3	Pressure Roller Thermistor	Detects the temperature of the hot roller for fusing temperature control.
THERMOSTATS		
TS1	Pressure Roller Thermostat 1	Monitors the temperature of the pressure roller and cuts the circuit if the pressure roller fusing lamp overheats.
TS2	Pressure Roller Thermostat 2	Monitors the temperature of the pressure roller and cuts the circuit if the pressure roller fusing lamp overheats.
TS3	Thermostat 1	Monitors the temperature of the fusing belt nd cuts the circuit if the fusing unit overheats.
TS4	Thermostat 2	Monitors the temperature of the fusing belt nd cuts the circuit if the fusing unit overheats.
TS5	Thermostat 3	Monitors the temperature of the fusing belt nd cuts the circuit if the fusing unit overheats.
TS6	Thermostat 4	Monitors the temperature of the fusing belt nd cuts the circuit if the fusing unit overheats.

Downloaded from www.Manualslib.com manuals search engine

4.1.2 ARDF

No.	Component	Function
MOTORS		
M01	Feed Motor	Drives the feed belt, and the separation, pick-up, and transport as far as the 1st transport roller.
M02	Transport Motor	Controls the original scanning speed.
M03	Exit Motor	Feeds paper out of the ARDF and onto the original exit table.
M04	Upper Inverter Motor	Controls the rotation of the upper inverter roller that feeds the original in and out of the upper inverter path.
M05	Lower Inverter Motor	Controls the rotation of the lower inverter roller that feeds the original in and out of the lower inverter path.
M06	Pick-up Motor	Raises and lowers the pick-up roller.
M07	Bottom Plate Lift Motor	Raises and lowers the bottom under the original stack.
PCB		
PCB01	ARDF Main Board	Controls the ARDF and communicates with the main copier boards.
SENSORS		
S01	Original Width Sensor 2	Detects paper wider than 191.5 mm (7.5 in.) measured from the reference point.
S02	Original Width Sensor 3	Detects paper wider than 230 mm (9.1 in.) measured from the reference point.
S03	Original Width Sensor 4	Detects paper wider than 263.5 mm (10.4 in.) measured from the reference point.
S04	Original Width Sensor 5	Detects paper wider than 288 mm (11.3 in.) measured from the reference point.
S05	Original Width Sensor 1	Detects paper wider than 138 mm (5.4 in.) measured from the reference point.
S06	Original Set Sensor	Detects whether an original is on the table.
S07	Bottom Plate HP Sensor	Detects whether the bottom plate is in the down position or not.
S08	Feed Cover Sensor	Detects whether the feed cover is open or not.
S09	Bottom Plate Position Sensor	Detects when the original is at the correct position for feeding.
S10	Upper Inverter Sensor	Detects leading and trailing edge of the paper as it enters and leaves the upper path of the inverter.
S11	LG Detection Sensor	Detects paper longer than 318 mm (12.5 in.) on the original table.
S12	A4 Detection Sensor	Detects paper longer than 291 mm (11.5 in.) on the original table.
S13	B5 Detection Sensor	Detects paper longer than 240 mm (9.5 in.) on the original table.
S14	Interval Sensor	Adjusts the timing of the original transport speed to the original scanning speed after the original feeds. During duplex scanning, or if original is small (B6, A5, or HLT) the interval sensor detects the leading edge of the original and delays the pre-scanning motor for the prescribed number of pulses to buckle the original and correct skew.

Downloaded from www.Manualslib.com manuals search engine

No.	Component	Function
S15	Skew Correction Sensor	After pick-up and separation, the skew correction sensor detects the leading edge of the original. This signal slows the rotation of the entrance roller for a prescribed number of pulses to buckle the original and correct skew.
S16	Separation Sensor	Detects the separation of the original.
S17	Exit Sensor	Detects the leading and trailing edges of paper feed out to the original table and detects misfeeds. Also signals when to stop the scanning belt.
S18	Registration Sensor	Detects the leading edge and trailing edges of the original to detects jams and stops the original at the ADF exposure glass to correct buckle.
S19	Pick-up Roller HP Sensor	Detects whether the pick-up roller is up or not.
S20	Lower inverter sensor	Detects the original in the path of the lower inverter before it feeds to the inverter rollers for 2nd side scanning, or feeds to the exit rollers for exit.
S21	ARDF Position Sensor	Detects whether the ARDF unit is up or down for scanning on the main exposure glass (book mode).
S22	APS Start Sensor	Signals the CPU when the DF is opened and closed (for platen mode) so that the original size sensors in the copier can check the original size.
SOLENOIDS		
SOL01	Upper Inverter Solenoid	Opens and closes the upper junction gate at the entrance of the upper inverter path. During simplex scanning, closes the upper inverter path so the original exits straight to the exit tray. During duplex scanning, opens to allow the original to enter the upper inverter path and closes to direct it once again into the feed path for 2nd side scanning.
SOL02	Lower Inverter Solenoid	Opens and closes the lower junction gate. During duplex scanning opens after the 2nd side is scanned to direct the original into the lower inverter path while the next sheet is fed to the upper inverter path above, then closes to direct the original out onto the original exit tray.

Downloaded from www.Manualslib.com manuals search engine

August, 2006

APPENDIX

- e-STUDIO4500c/5500c POINT TO POINT DIAGRAM (1/4)
- e-STUDIO4500c/5500c POINT TO POINT DIAGRAM (2/4)
- e-STUDIO4500c/5500c POINT TO POINT DIAGRAM (3/4)
- e-STUDIO4500c/5500c POINT TO POINT DIAGRAM (4/4)
- e-STUDIO4500c/5500c ELECTRICAL COMPONENT LAYOUT (1/3)
- e-STUDIO4500c/5500c ELECTRICAL COMPONENT LAYOUT (2/3)
- e-STUDIO4500c/5500c ELECTRICAL COMPONENT LAYOUT (3/3)
- ADF POINT TO POINT DIAGRAM
- 2000/3000 SHEET FINISHER (B700/701) POINT TO POINT DIAGRAM (1/2)
- 2000/3000 SHEET FINISHER (B700/701) POINT TO POINT DIAGRAM (2/2)
- OUTPUT JOGGER UNIT (B703) POINT TO POINT DIAGRAM
- MAILBOX (B762) POINT TO POINT DIAGRAM
- COVER INTERPOSER (B704) POINT TO POINT DIAGRAM
- LCT (B473) POINT TO POINT DIAGRAM
- 3000-SHEET FINISHER (B706) POINT TO POINT DIAGRAM
- ADF ELECTRICAL COMPONENT LAYOUT
- 2000/3000 SHEET FINISHER (B700/B701) ELECTRICAL COMPONENT LAYOUT (1/2)
- 2000/3000 SHEET FINISHER (B700/B701) ELECTRICAL COMPONENT LAYOUT (2/2)
- OUTPUT JOGGER UNIT(B703) ELECTRICAL COMPONENT LAYOUT
- MAILBOX (B762) ELECTRICAL COMPONENT LAYOUT
- COVER INTERPOSER (B704) ELECTRICAL COMPONENT LAYOUT
- LCT (B473) ELECTRICAL COMPONENT LAYOUT
- 3000-SHEET FINISHER (B706) ELECTRICAL COMPONENT LAYOUT

Downloaded from www.Manualslib.com manuals search engine

e-STUDIO4500c/5500c POINT TO POINT DIAGRAM (1/4)

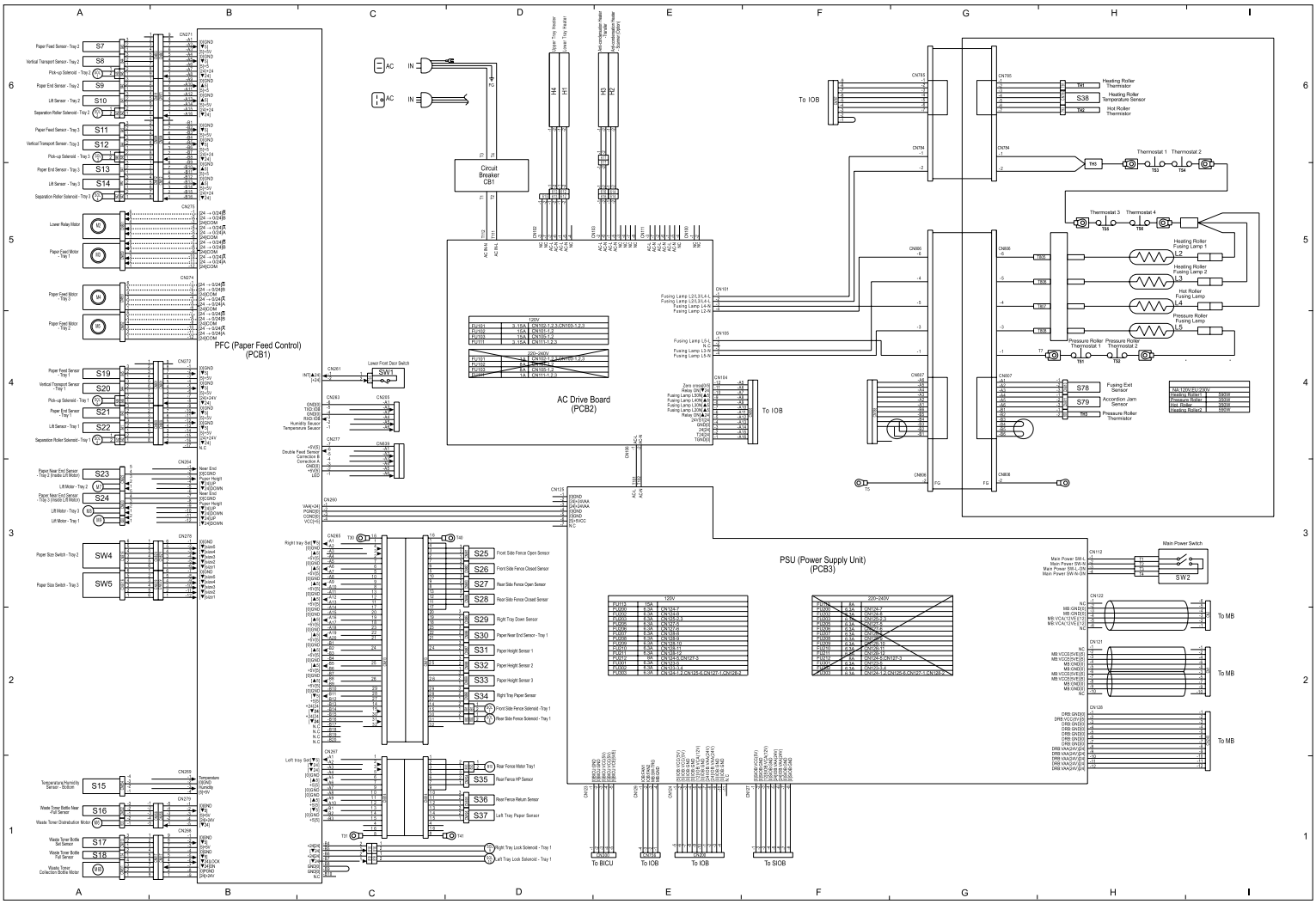

Downloaded from www.Manualslib.com manuals search engine

e-STUDIO4500c/5500c POINT TO POINT DIAGRAM (2/4)

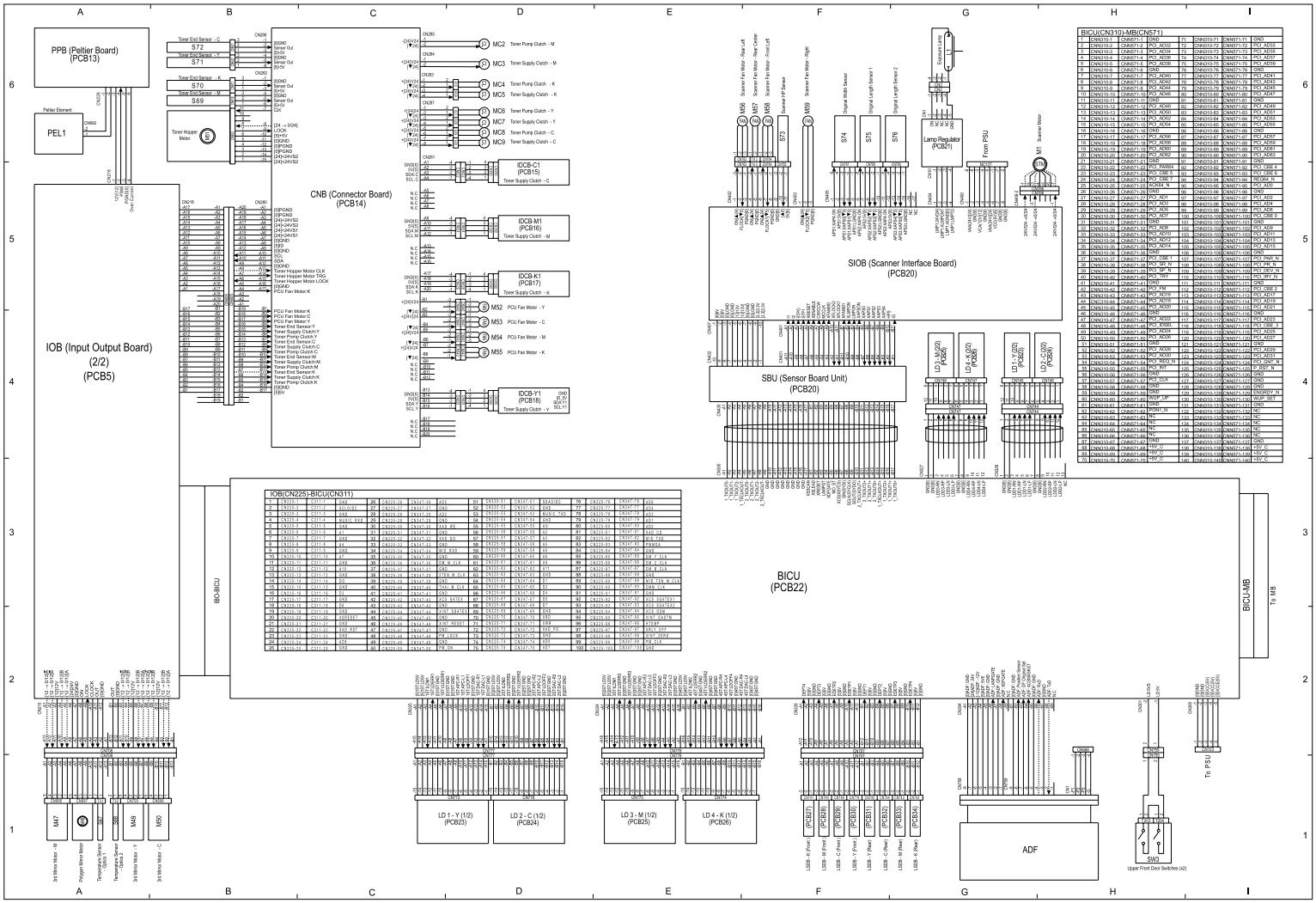

Downloaded from www.Manualslib.com manuals search engine

e-STUDIO4500c/5500c POINT TO POINT DIAGRAM (3/4)

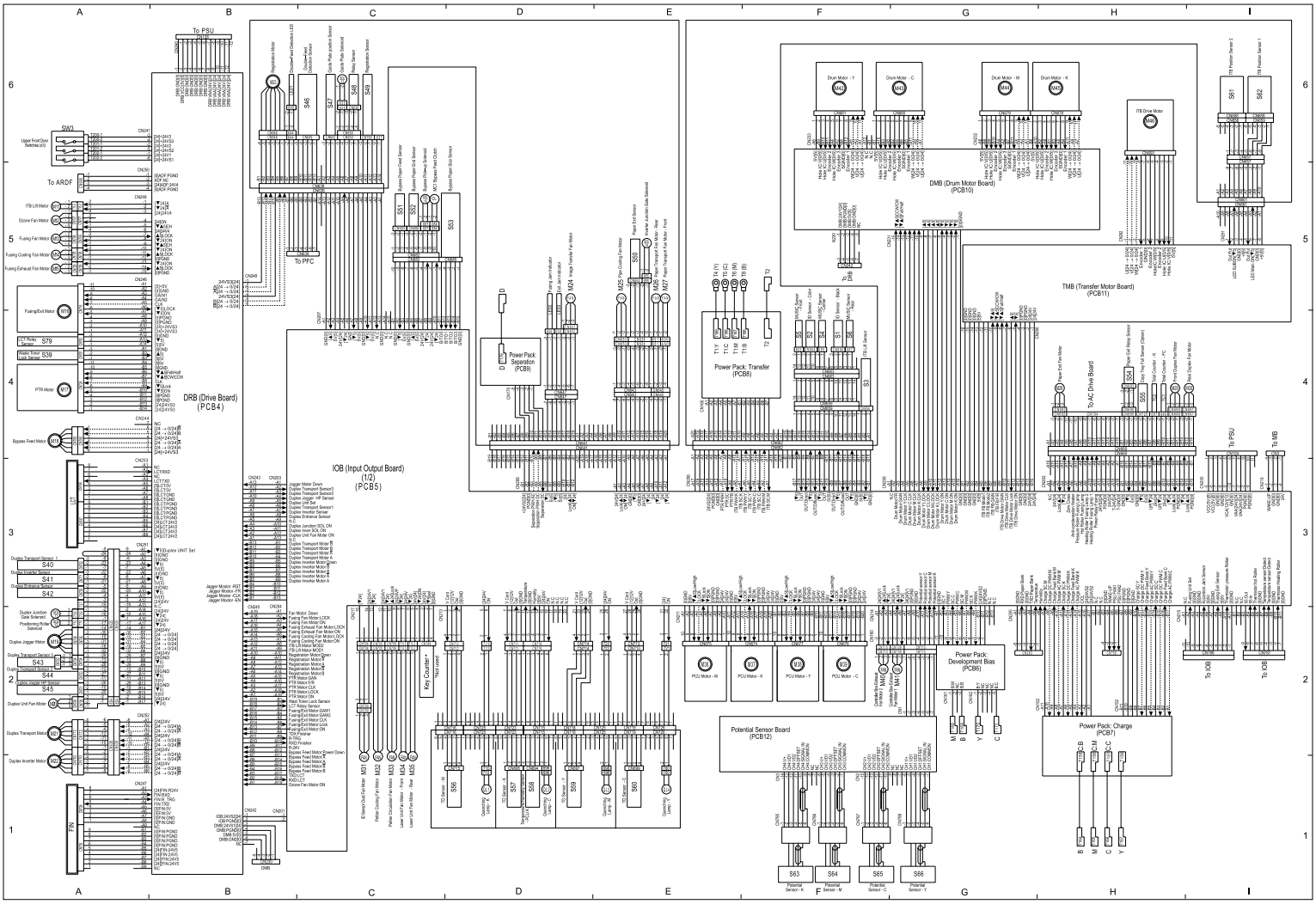

Downloaded from www.Manualslib.com manuals search engine

e-STUDIO4500c/5500c POINT TO POINT DIAGRAM (4/4)

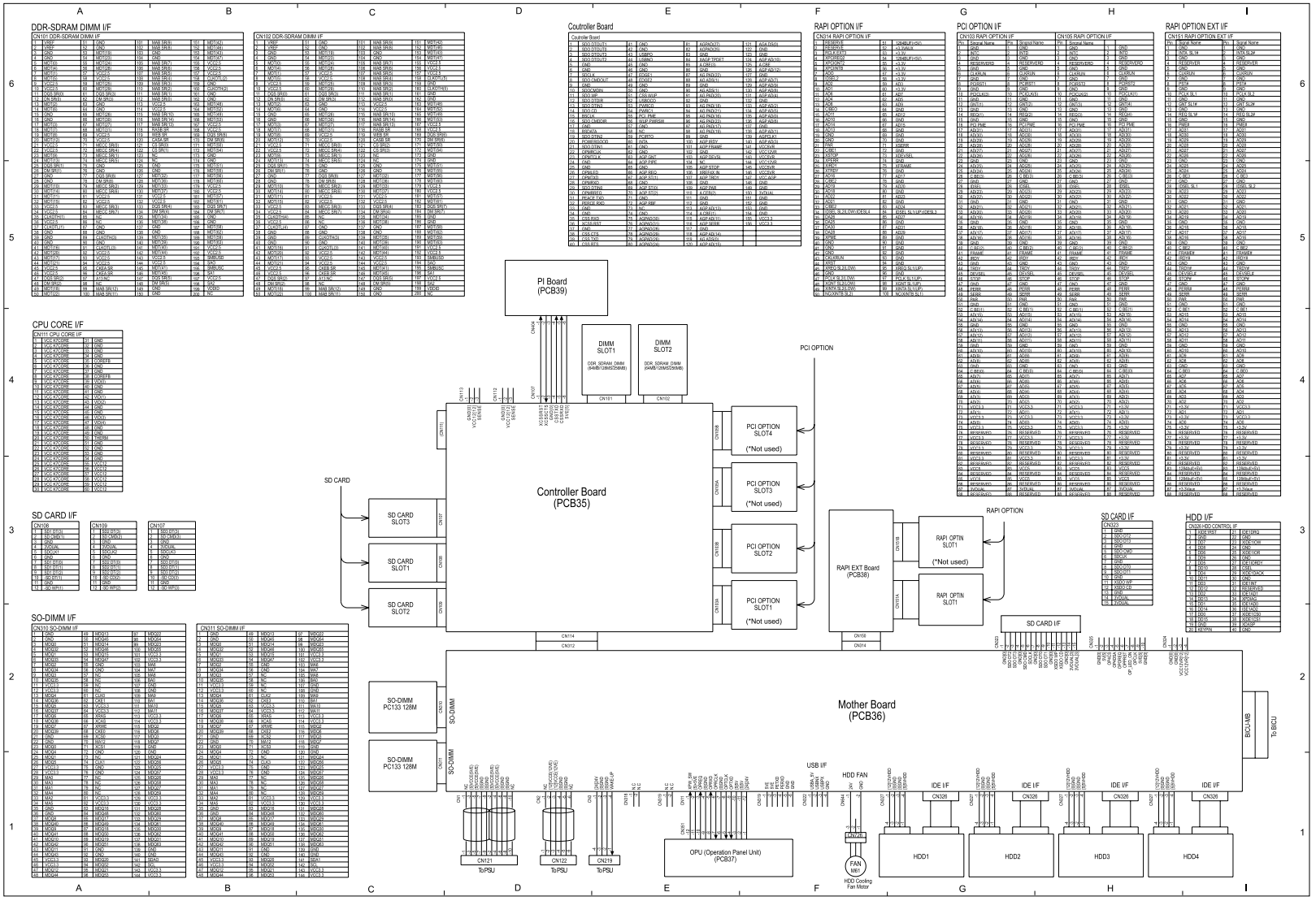

Downloaded from www.Manualslib.com manuals search engine

e-STUDIO4500c/5500c ELECTRICAL COMPONENT LAYOUT (1/3)

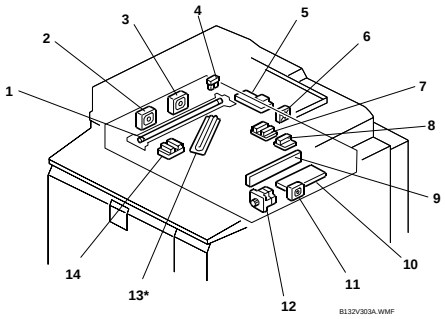

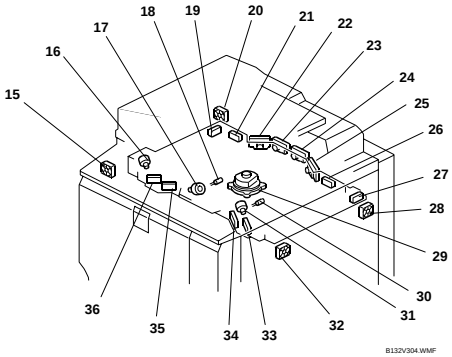

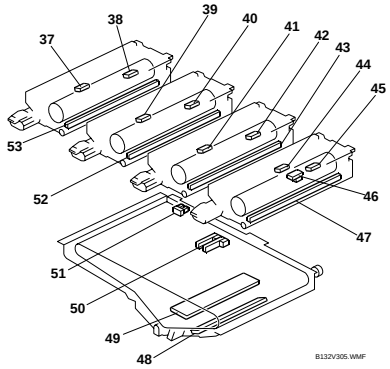

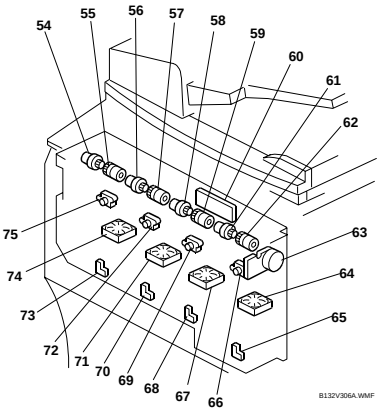

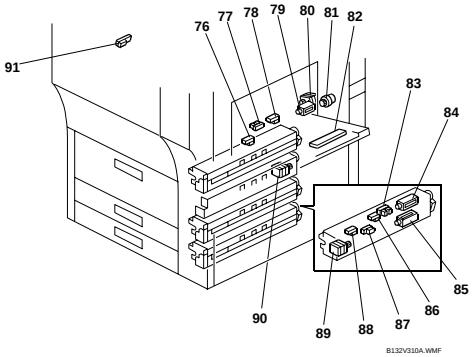

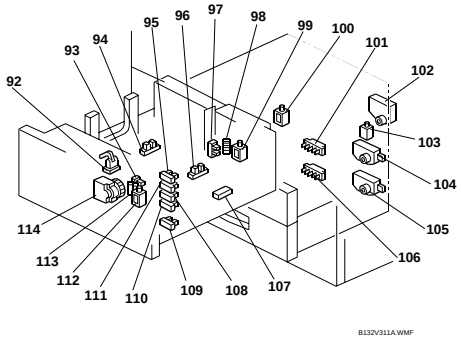

Downloaded from www.Manualslib.com manuals search engine

e-STUDIO4500c/5500c ELECTRICAL COMPONENT LAYOUT (2/3)

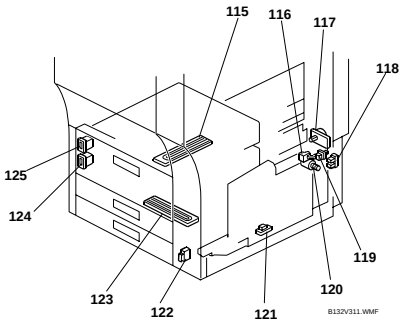

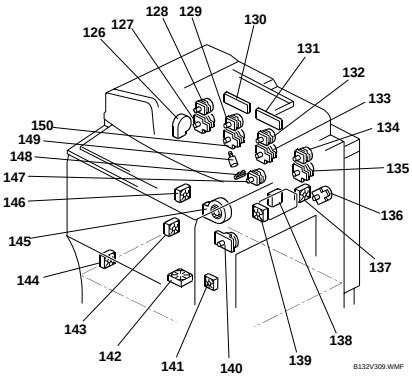

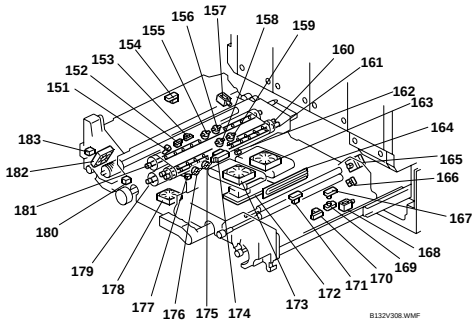

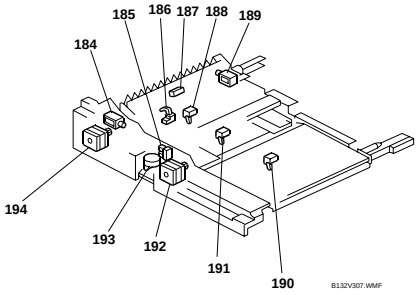

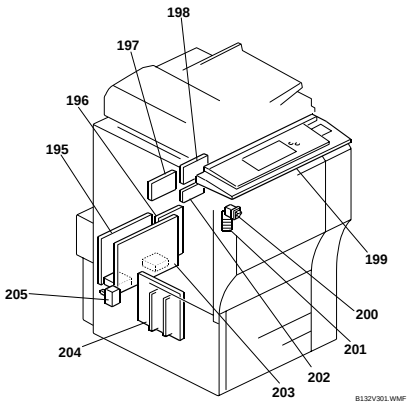

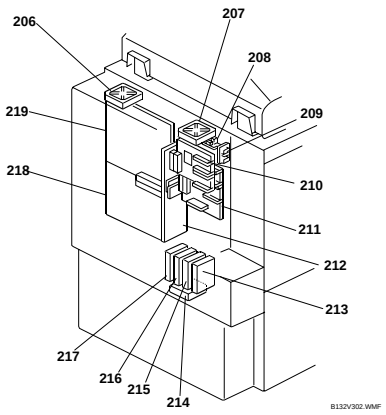

Downloaded from www.Manualslib.com manuals search engine

e-STUDIO4500c/5500c ELECTRICAL COMPONENT LAYOUT (3/3)

Symbol	Name	Index No.	P to P	Page
Board				
PCB1	PFC (Paper Feed Control)	196	B6	1/4
PCB2	AC Drive Board	204	D4	1/4
PCB3	PSU (Power Supply Unit)	203	F3	1/4
PCB4	DRB (Drive Board)	198	B3	3/4
PCB5	IOB (Input Output Board)(2/2)	218	A4	2/4
	IOB (Input Output Board)(1/2)		C4	3/4
PCB6	Power Pack: Development Bias	131	G2	3/4
PCB7	Power Pack: Charge	195	H2	3/4
PCB8	Power Pack: Transfer	49	E4	3/4
PCB9	Power Pack: Separation	172	D4	3/4
PCB10	DMB (Drum Motor Board)	197	G5	3/4
PCB11	TMB (Transfer Motor Board)	202	G5	3/4
PCB12	Potential Sensor Board	130	F2	3/4
PCB13	PPB (Peltier Board)	208	A6	2/4
PCB14	CNB (Connector Board)	60	C4	2/4
PCB15	IDCB - C1	70	D5	2/4
PCB16	IDCB - M1	68	D5	2/4
PCB17	IDCB - K1	65	D5	2/4
PCB18	IDCB - Y1	73	D4	2/4
PCB19	SBU (Sensor Board Unit)	9	F4	2/4
PCB20	SIOB (Scanner Interface Board)	10	G5	2/4
PCB21	Lamp Regulator	5	G6	2/4
PCB22	BICU	219	F3	2/4
PCB23	LD 1 - Y (1/2)	23	D1	2/4
	LD 1 - Y (2/2)		G4	2/4
PCB24	LD 2 - C (1/2)	22	D1	2/4
	LD 2 - C (2/2)		H4	2/4
PCB25	LD 3 - M (1/2)	24	E1	2/4
	LD 3 - M (2/2)		G4	2/4
PCB26	LD 4 - K (1/2)	25	E1	2/4
	LD 4 - K (2/2)		G4	2/4
PCB27	LSDB - K (Front)	27	F1	2/4
PCB28	LSDB - M (Front)	26	F1	2/4
PCB29	LSDB - C (Front)	21	F1	2/4
PCB30	LSDB - Y (Front)	19	F1	2/4
PCB31	LSDB - Y (Rear)	36	F1	2/4
PCB32	LSDB - C (Rear)	35	F1	2/4
PCB33	LSDB - M (Rear)	34	G1	2/4
PCB34	LSDB - K (Rear)	33	G1	2/4
PCB35	Controller Board	211	D3	4/4
PCB36	Mother Board	212	E4	4/4
PCB37	OPU (Operation Panel Unit)	199	E4	4/4
PCB38	RAPI EXT Board	210	F2	4/4
PCB39	PI Board	209	D4	4/4
Solenoid				
SOL1	Pick–up Solenoid - Tray 2	84	A6	1/4
SOL2	Separation Roller Solenoid - Tray 2	85	A6	1/4
SOL3	Pick–up Solenoid - Tray 3	84	A6	1/4
SOL4	Separation Roller Solenoid - Tray 3	85	A5	1/4
SOL5	Pick–up Solenoid - Tray 1	84	A4	1/4
SOL6	Separation Roller Solenoid - Tray 1	85	A4	1/4
SOL7	Front Side Fence Solenoid -Tray 1	112	D2	1/4
SOL8	Rear Side Fence Solenoid - Tray 1	99	D2	1/4
SOL9	Right Tray Lock Solenoid - Tray 1	103	D1	1/4
SOL10	Left Tray Lock Solenoid - Tray 1	100	D1	1/4
SOL11	Duplex Junction Gate Solenoid	157	A2	3/4
SOL12	Positioning Roller Solenoid	184	A2	3/4
SOL13	Guide Plate Solenoid	168	C6	3/4
SOL14	Inverter Junction Gate Solenoid	189	E5	3/4
SOL15	Bypass Pick–up Solenoid	79	C5	3/4
Switch				
SW1	Lower Front Door Switch	122	C4	1/4
SW2	Main Power Switch	200	H3	1/4
SW3	Upper Front Door Switches (x2)	201	H1	2/4
	Upper Front Door Switches (x3)		A6	3/4
SW4	Paper Size Switch - Tray 2	101	A3	1/4
SW5	Paper Size Switch - Tray 3	106	A3	1/4

Symbol	Name	Index No.	P to P	Page
Motor				
M1	Scanner Motor	12	G6	2/4
M2	Lower Relay Motor	90	A5	1/4
M3	Paper Feed Motor - Tray 1	89	A5	1/4
M4	Paper Feed Motor - Tray 3	89	A5	1/4
M5	Paper Feed Motor - Tray 2	89	A4	1/4
M6	Waste Toner Distribution Motor	120	A1	1/4
M7	Lift Motor - Tray 2	104	A3	1/4
M8	Lift Motor - Tray 3	105	A3	1/4
M9	Lift Motor - Tray 1	102	A3	1/4
M10	Rear Fence Motor - Tray 1	114	D1	1/4
M11	ITB Lift Motor	149	A5	3/4
M12	Ozone Fan Motor	145	A5	3/4
M13	Fusing Fan Motor	126	A5	3/4
M14	Fusing Cooling Fan Motor	15	A5	3/4
M15	Fusing Exhaust Fan Motor	20	A5	3/4
M16	Fusing/Exit Motor	140	A4	3/4
M17	PTR Motor	147	A4	3/4
M18	Bypass Feed Motor	80	A4	3/4
M19	Duplex Jogger Motor	193	A2	3/4
M20	Duplex Unit Fan Motor	142	A2	3/4
M21	Duplex Transport Motor	192	A2	3/4
M22	Duplex Inverter Motor	194	A1	3/4
M23	Registration Motor	165	B6	3/4
M24	Image Transfer Fan Motor	178	D5	3/4
M25	Pipe Cooling Fan Motor	182	E5	3/4
M26	Paper Transport Fan Motor - Rear	163	E5	3/4
M27	Paper Transport Fan Motor - Front	173	E5	3/4
M28	Paper Exit Fan Motor	146	H4	3/4
M29	Front Duplex Fan Motor	144	H4	3/4
M30	Rear Duplex Fan Motor	143	H4	3/4
M31	ID Sensor Dust Fan Motor	141	C1	3/4
M32	Peltier Cooling Fan Motor	137	C1	3/4
M33	Peltier Circulation Fan Motor	139	C1	3/4
M34	Laser Unit Fan Motor - Front	32	C1	3/4
M35	Laser Unit Fan Motor - Rear	28	C1	3/4
M36	PCU Motor - M	132	E2	3/4
M37	PCU Motor - K	134	F2	3/4
M38	PCU Motor - Y	128	F2	3/4
M39	PCU Motor - C	129	F2	3/4
M40	Controller Box Exhaust Fan Motor 2	206	F2	3/4
M41	Controller Box Exhaust Fan Motor 1	207	F2	3/4
M42	Drum Motor - Y	127	F6	3/4
M43	Drum Motor - C	150	G6	3/4
M44	Drum Motor - M	133	G6	3/4
M45	Drum Motor - K	135	H6	3/4
M46	ITB Drive Motor	136	H6	3/4
M47	3rd Mirror Motor - M	31	A1	2/4
M48	Polygon Mirror Motor	29	A1	2/4
M49	3rd Mirror Motor - Y	16	A1	2/4
M50	3rd Mirror Motor - C	17	B1	2/4
M51	Toner Hopper Motor	63	B6	2/4
M52	PCU Fan Motor - Y	74	D4	2/4
M53	PCU Fan Motor - C	71	D4	2/4
M54	PCU Fan Motor - M	67	D4	2/4
M55	PCU Fan Motor - K	64	D4	2/4
M56	Scanner Fan Motor - Rear Left	3	F6	2/4
M57	Scanner Fan Motor - Rear Center	6	F6	2/4
M58	Scanner Fan Motor - Front Left	2	F6	2/4
M59	Scanner Fan Motor - Right	11	F6	2/4
M60	Waste Toner Collection Bottle Motor	117	A1	1/4
M61	HDD Cooling Fan Motor	214	F1	4/4
Clutch				
MC1	Bypass Feed Clutch	81	C5	3/4
MC2	Toner Pump Clutch - M	58	D6	2/4
MC3	Toner Supply Clutch - M	59	D6	2/4
MC4	Toner Pump Clutch - K	61	D6	2/4
MC5	Toner Supply Clutch - K	62	D6	2/4
MC6	Toner Pump Clutch - Y	54	D6	2/4
MC7	Toner Supply Clutch - Y	55	D6	2/4
MC8	Toner Pump Clutch - C	56	D6	2/4
MC9	Toner Supply Clutch - C	57	D6	2/4

Symbol	Name	Index No.	P to P	Page
Sensor				
S1	ID Sensor - Black	48	F4	3/4
S2	ID Sensor - Color	48	F4	3/4
S3	ITB Lift Sensor	51	F4	3/4
S4	MUSIC Sensor - Center	48	F4	3/4
S5	MUSIC Sensor - Front	48	F4	3/4
S6	MUSIC Sensor - Rear	48	F4	3/4
S7	Paper Feed Sensor - Tray 2	88	A6	1/4
S8	Vertical Transport Sensor - Tray 2	87	A6	1/4
S9	Paper End Sensor - Tray 2	86	A6	1/4
S10	Lift Sensor - Tray 2	83	A6	1/4
S11	Paper Feed Sensor - Tray 3	88	A6	1/4
S12	Vertical Transport Sensor - Tray 3	87	A6	1/4
S13	Paper End Sensor - Tray 3	86	A5	1/4
S14	Lift Sensor - Tray 3	83	A5	1/4
S15	Bottom Temperature/Humidity Sensor	121	A1	1/4
S16	Waste Toner Bottle Near-Full Sensor	118	A1	1/4
S17	Waste Toner Bottle Set Sensor	116	A1	1/4
S18	Waste Toner Bottle Full Sensor	119	A1	1/4
S19	Paper Feed Sensor - Tray 1	88	A4	1/4
S20	Vertical Transport Sensor - Tray 1	87	A4	1/4
S21	Paper End Sensor - Tray 1	86	A4	1/4
S22	Lift Sensor - Tray 1	83	A4	1/4
S23	Paper Near End Sensor - Tray 2 (Inside Lift Motor)	104	A3	1/4
S24	Paper Near End Sensor - Tray 3 (Inside Lift Motor)	105	A3	1/4
S25	Front Side Fence Open Sensor	113	D3	1/4
S26	Front Side Fence Closed Sensor	93	D3	1/4
S27	Rear Side Fence Open Sensor	98	D3	1/4
S28	Rear Side Fence Closed Sensor	97	D3	1/4
S29	Right Tray Down Sensor	109	D2	1/4
S30	Paper Near End Sensor - Tray 1	95	D2	1/4
S31	Paper Height Sensor 1	111	D2	1/4
S32	Paper Height Sensor 2	108	D2	1/4
S33	Paper Height Sensor 3	110	D2	1/4
S34	Right Tray Paper Sensor	107	D2	1/4
S35	Rear Fence HP Sensor	94	D1	1/4
S36	Rear Fence Return Sensor	96	D1	1/4
S37	Left Tray Paper Sensor	92	D1	1/4
S38	Heating Roller Temperature Sensor	174	H6	1/4
S39	Waste Toner Lock Sensor	148	A4	3/4
S40	Duplex Transport Sensor 1	188	A3	3/4
S41	Duplex Inverter Sensor	186	A3	3/4
S42	Duplex Entrance Sensor	187	A3	3/4
S43	Duplex Transport Sensor 3	190	A2	3/4
S44	Duplex Transport Sensor 2	191	A2	3/4
S45	Duplex Jogger HP Sensor	185	A2	3/4
S46	Double–Feed Detection Sensor	167	C6	3/4
S47	Guide Plate position Sensor	166	C6	3/4
S48	Relay Sensor	170	C6	3/4
S49	Registration Sensor	171	C6	3/4
S50	Paper Exit Sensor	154	E5	3/4
S51	Bypass Paper Feed Sensor	78	C5	3/4
S52	Bypass Paper End Sensor	77	C5	3/4
S53	Bypass Paper Size Sensor	82	D5	3/4
S54	Paper Exit Relay Sensor	91	H4	3/4
S55	Copy Tray Full Sensor (Option)	-	H4	3/4
S56	TD Sensor - M	42	D1	3/4
S57	TD Sensor - K	45	D1	3/4
S58	Temperature/Humidity Sensor - PCU K	46	D1	3/4
S59	TD Sensor - Y	39	D1	3/4
S60	TD Sensor - C	40	E1	3/4

Symbol	Name	Index No.	P to P	Page
Sensor				
S61	ITB Position Sensor 2	50	I6	3/4
S62	ITB Position Sensor 1	50	I6	3/4
S63	Potential Sensor - K	44	F1	3/4
S64	Potential Sensor - M	41	F1	3/4
S65	Potential Sensor - C	39	F1	3/4
S66	Potential Sensor - Y	37	G1	3/4
S67	Temperature Sensor - Optics 1	18	A1	2/4
S68	Temperature Sensor - Optics 2	30	A1	2/4
S69	Toner End Sensor - M	69	B6	2/4
S70	Toner End Sensor - K	66	B6	2/4
S71	Toner End Sensor - Y	75	B6	2/4
S72	Toner End Sensor - C	72	B6	2/4
S73	Scanner HP Sensor	4	F6	2/4
S74	Original Width Sensor	14	G6	2/4
S75	Original Length Sensor 1	7	G6	2/4
S76	Original Length Sensor 2	8	G6	2/4
S77	Accordion Jam Sensor	152	H4	1/4
S78	Fusing Exit Sensor	153	H4	1/4
S79	LCT Relay Sensor	76	A4	3/4
Counter				
TC1	Total Counter - FC	125	H4	3/4
TC2	Total Counter - K	124	H4	3/4
Circuit Breaker				
CB1	Circuit Breaker	205	D5	1/4
Heater				
H1	Lower Tray Heater	123	D6	1/4
H2	Anti-condensation Heater - Scanner (*Not Used)	13*	E6	1/4
H3	Anti-condensation Heater -Transfer	164	D6	1/4
H4	Upper Tray Heater	115	E6	1/4
HDD				
HDD1	HDD 1	217	G1	4/4
HDD2	HDD 2	216	G1	4/4
HDD3	HDD 3	215	H1	4/4
HDD4	HDD 4	213	H1	4/4
Lamp				
L1	Exposure Lamp	1	G6	2/4
L2	Heating Roller Fusing Lamp 1	160	H5	1/4
L3	Heating Roller Fusing Lamp 2	161	H5	1/4
L4	Hot Roller Fusing Lamp	181	H5	1/4
L5	Pressure Roller Fusing Lamp	179	H4	1/4
Quenching Lamp				
QL1	Quenching Lamp - K	47	D1	3/4
QL2	Quenching Lamp - C	52	D1	3/4
QL3	Quenching Lamp - M	43	E1	3/4
QL4	Quenching Lamp - Y	53	E1	3/4
Thermistor				
TH1	Heating Roller Thermistor	177	H6	1/4
TH2	Hot Roller Thermistor	151	H6	1/4
TH3	Pressure Roller Thermistor	162	H4	1/4
Thermostat				
TS1	Pressure Roller Thermostat 1	176	H4	1/4
TS2	Pressure Roller Thermostat 2	175	H4	1/4
TS3	Thermostat 1	155	H5	1/4
TS4	Thermostat 2	156	H5	1/4
TS5	Thermostat 3	158	H5	1/4
TS6	Thermostat 4	159	H5	1/4
LED				
LED1	Double–Feed Detection LED	169	B6	3/4
LED2	Fusing Jam Indicator	180	D5	3/4
LED3	Exit Jam Indicator	183	D5	3/4
Peltier Element				
PEL1	Peltier Element	138	A6	2/4

Downloaded from www.Manualslib.com manuals search engine

ADF POINT TO POINT DIAGRAM

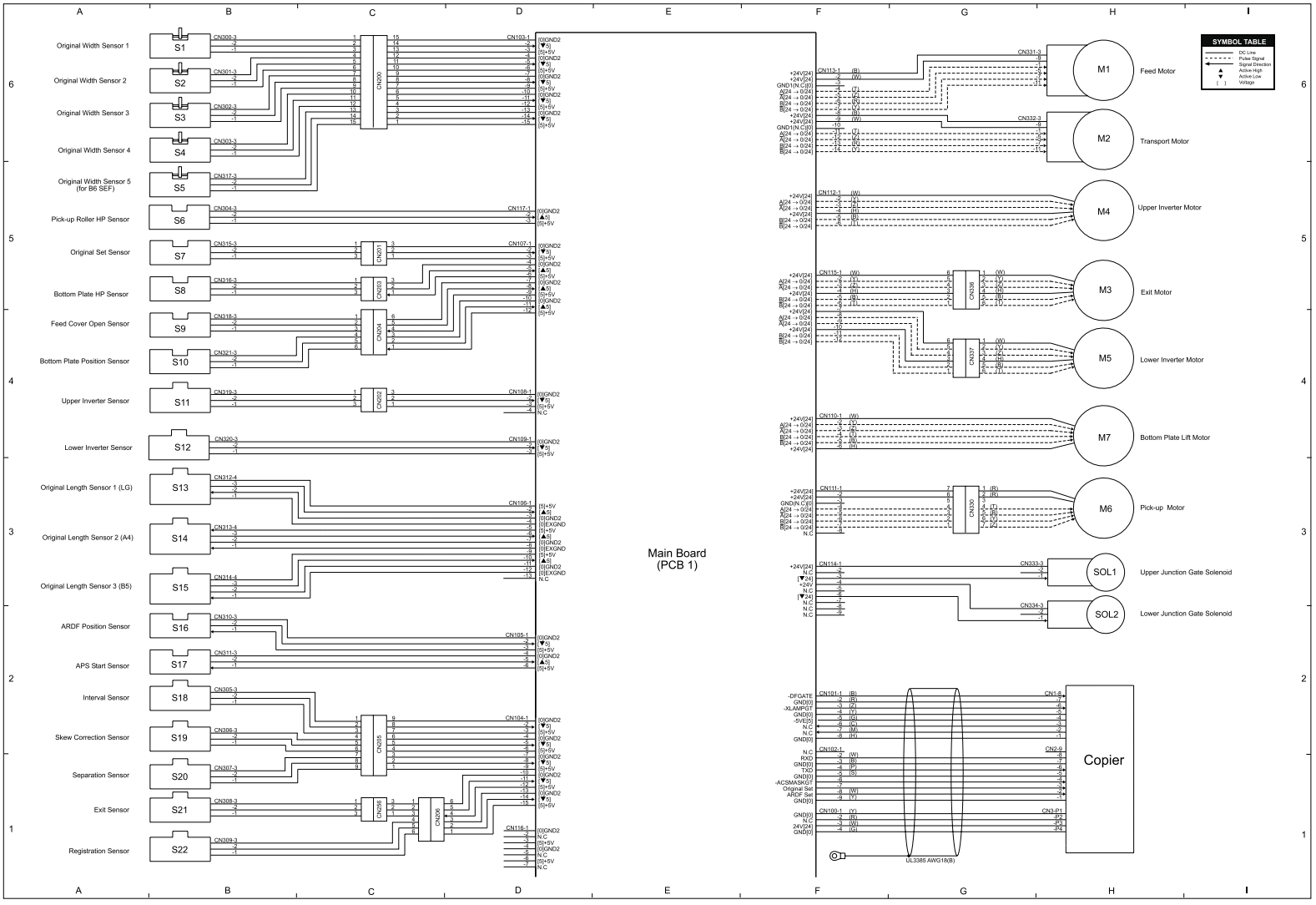

Downloaded from www.Manualslib.com manuals search engine

2000/3000 SHEET FINISHER(B700/B701)POINT TO POINT DIAGRAM(1/2)

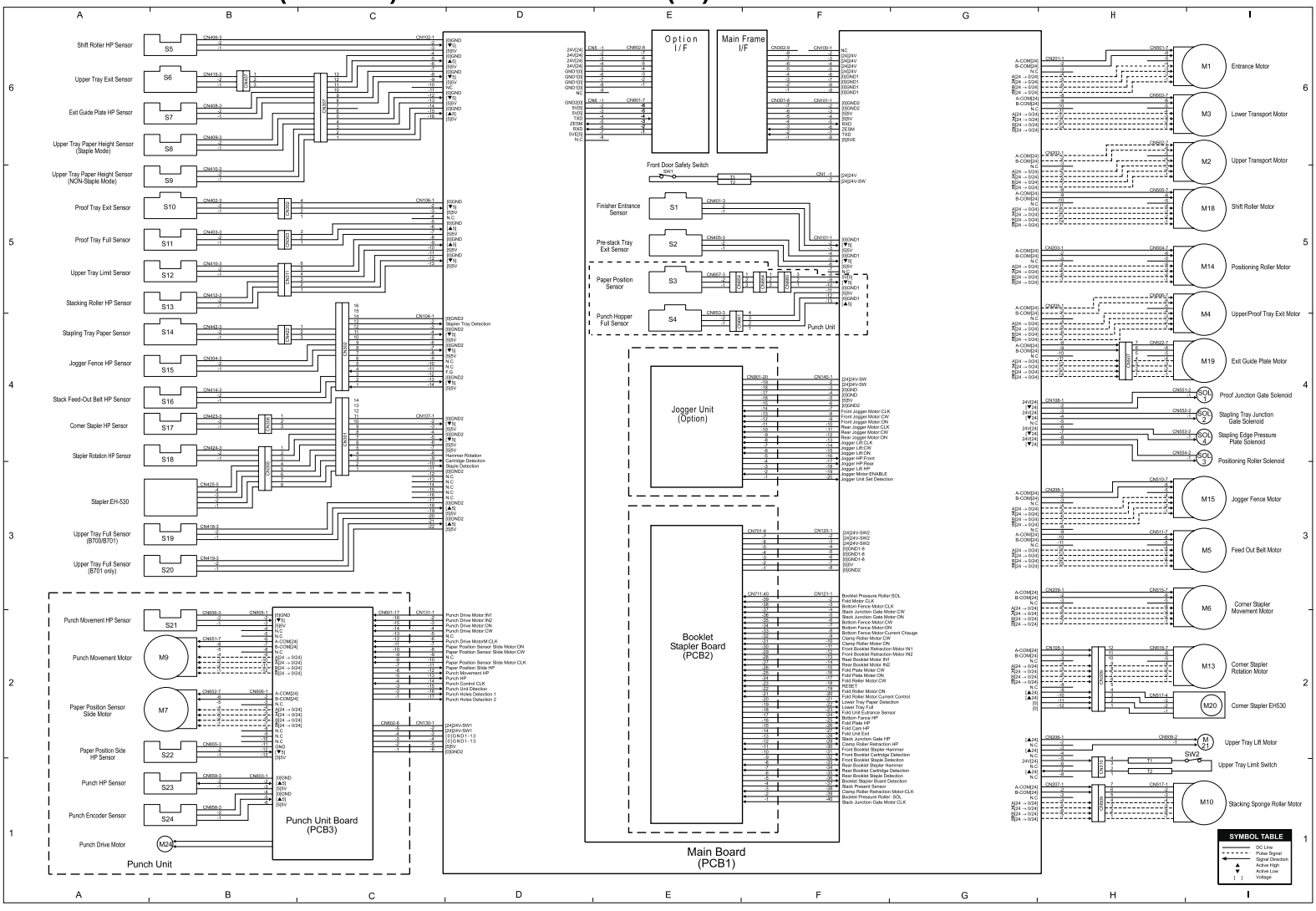

Downloaded from www.Manualslib.com manuals search engine

2000/3000 SHEET FINISHER(B700/B701)POINT TO POINT DIAGRAM(2/2)

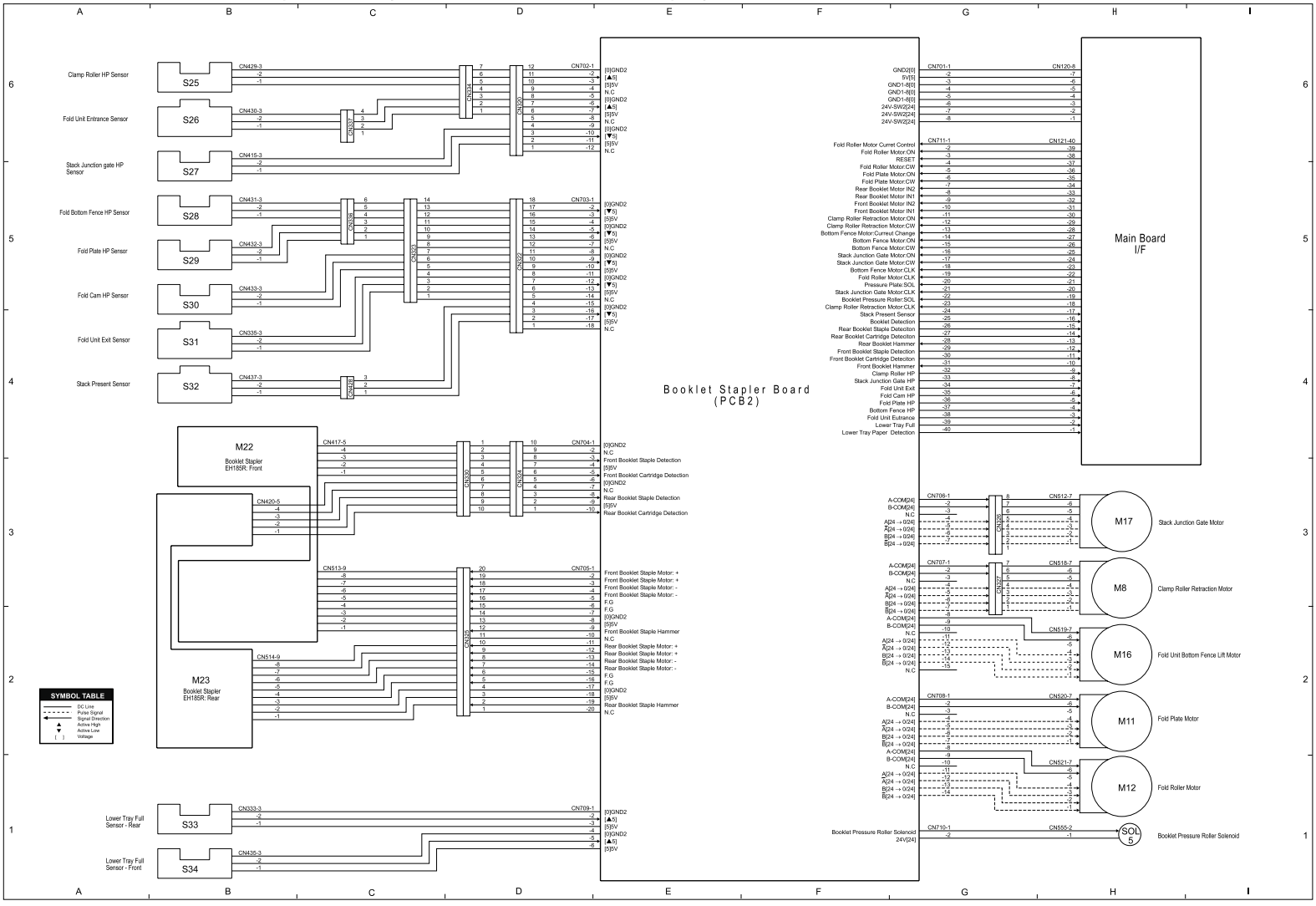

Downloaded from www.Manualslib.com manuals search engine

OUTPUT JOGGER UNIT(B703) POINT TO POINT DIAGRAM

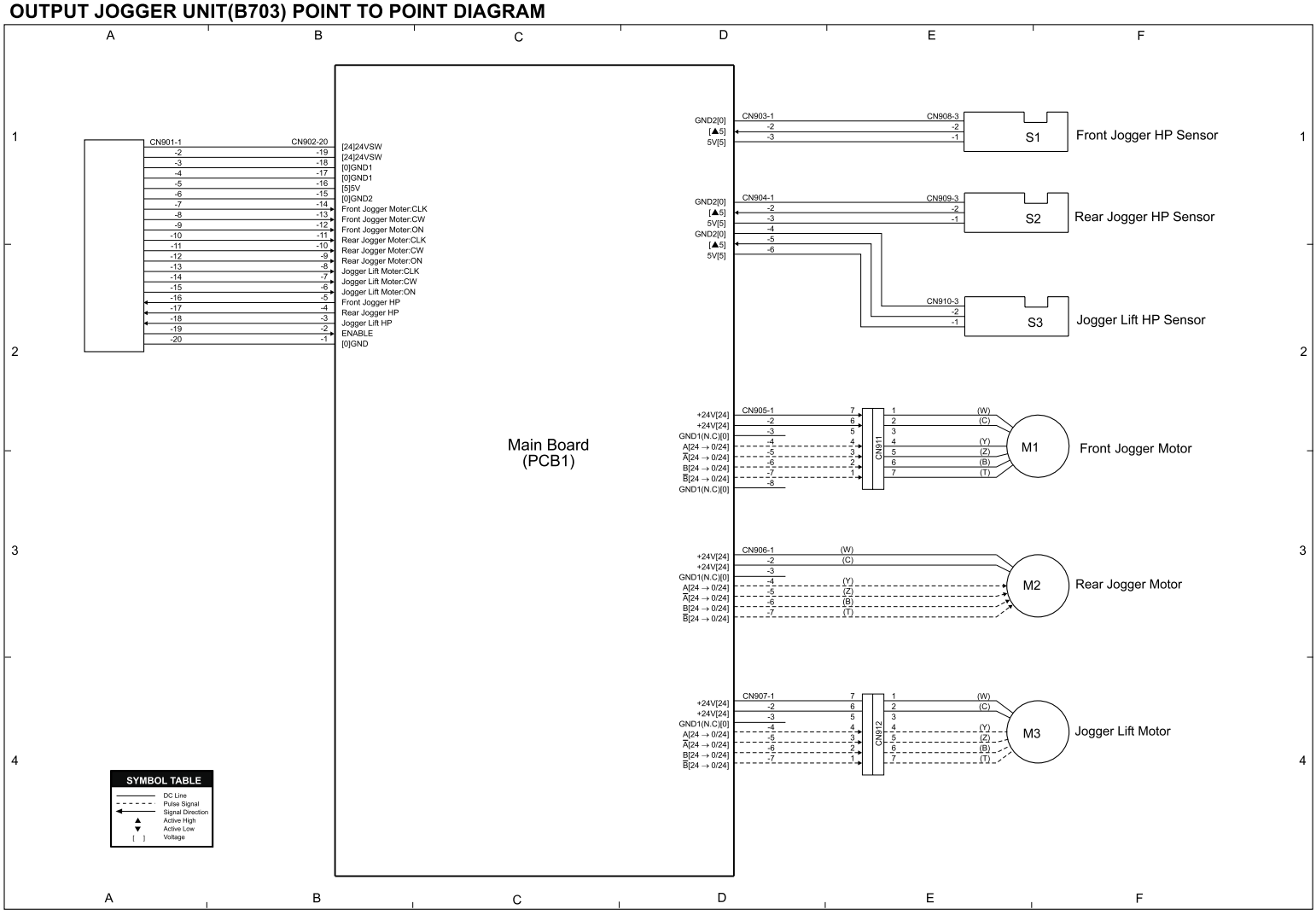

Downloaded from www.Manualslib.com manuals search engine

MAILBOX (B762) POINT TO POINT DIAGRAM

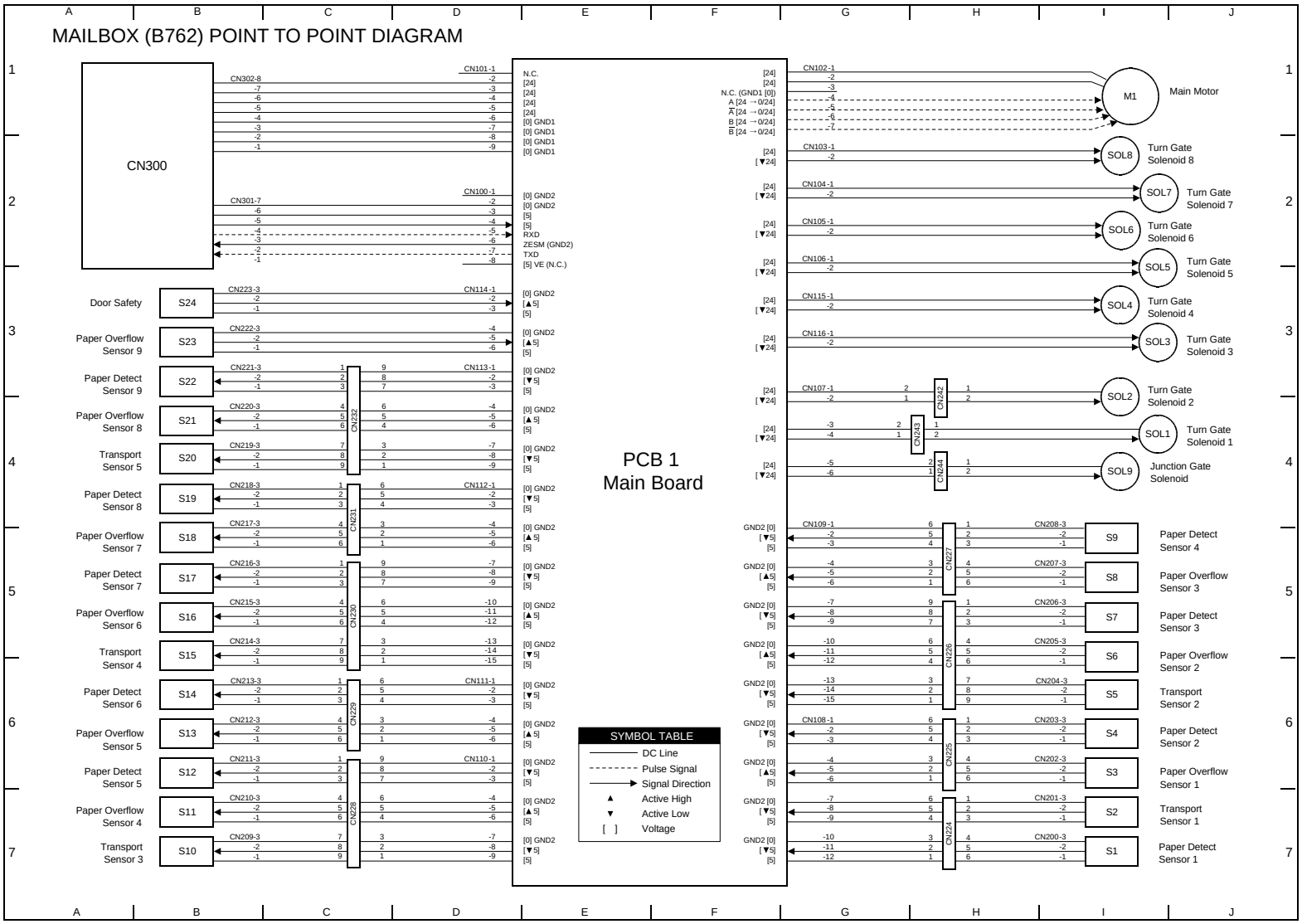

Downloaded from www.Manualslib.com manuals search engine

COVER INTERPOSER (B704) POINT TO POINT DIAGRAM

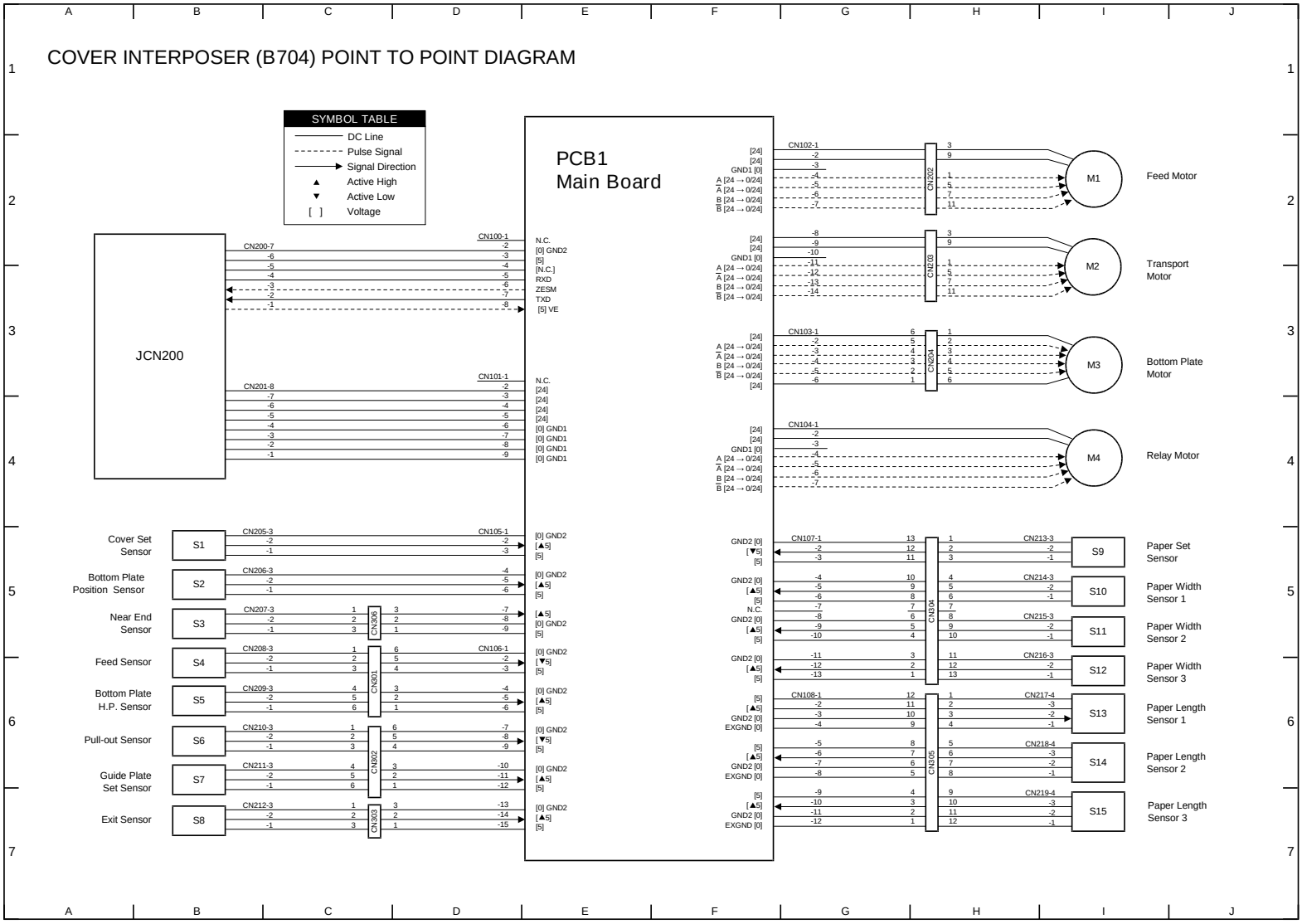

Downloaded from www.Manualslib.com manuals search engine

LCT (B473) POINT TO POINT DIAGRAM

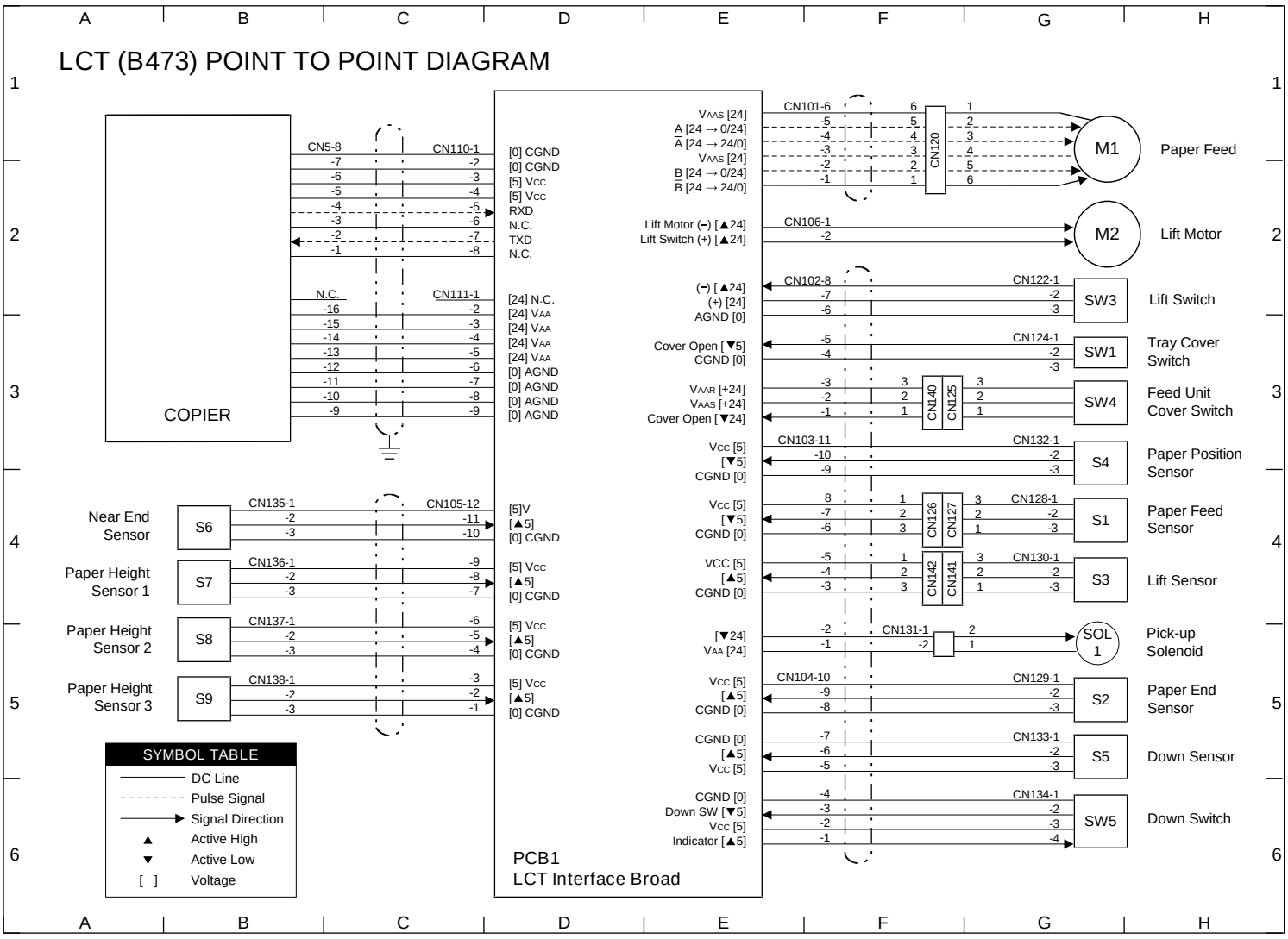

Downloaded from www.Manualslib.com manuals search engine

3000-SHEET FINISHER (B706) POINT TO POINT DIAGRAM

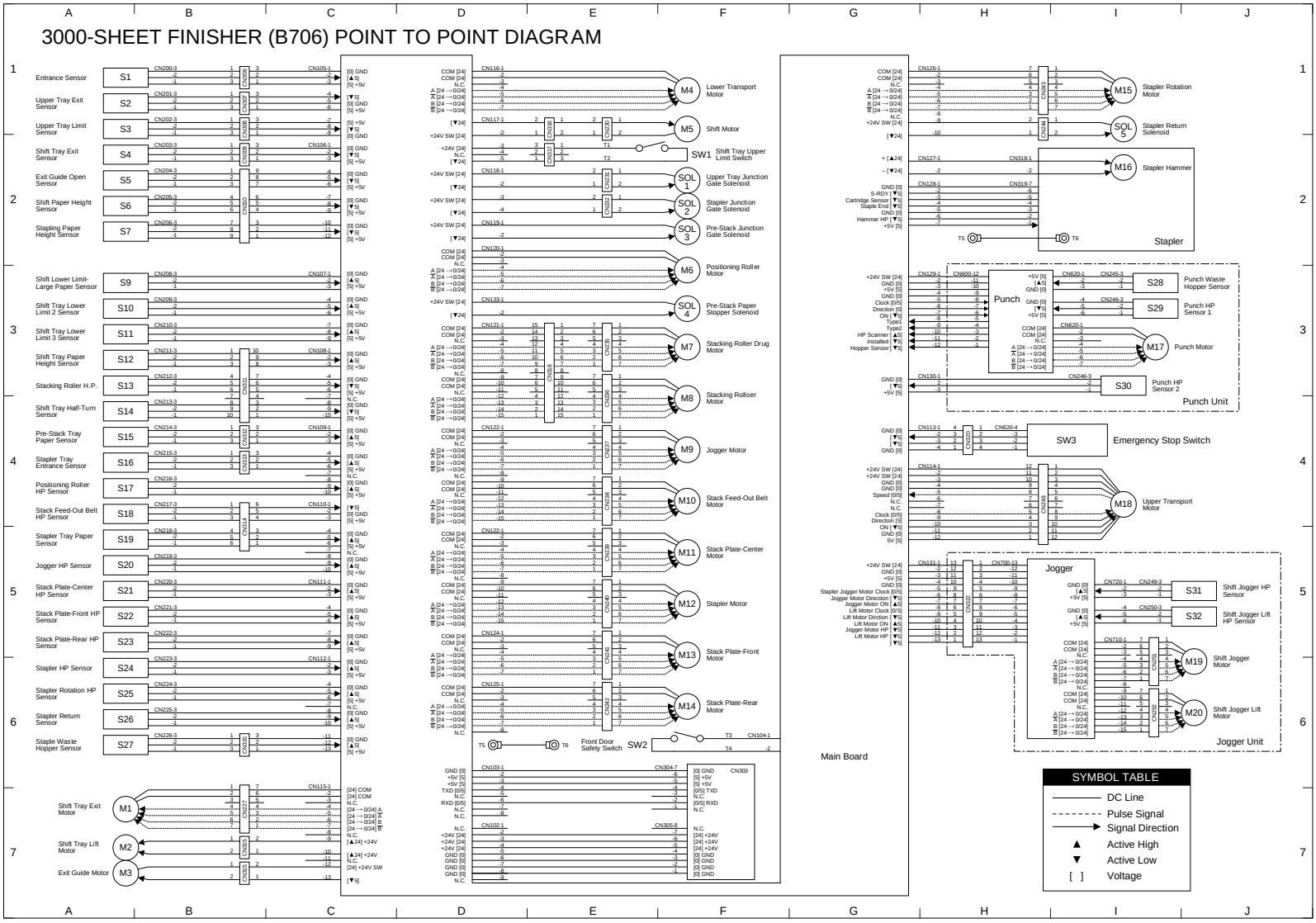

Downloaded from www.Manualslib.com manuals search engine

ADF ELECTRICAL COMPONENT LAYOUT

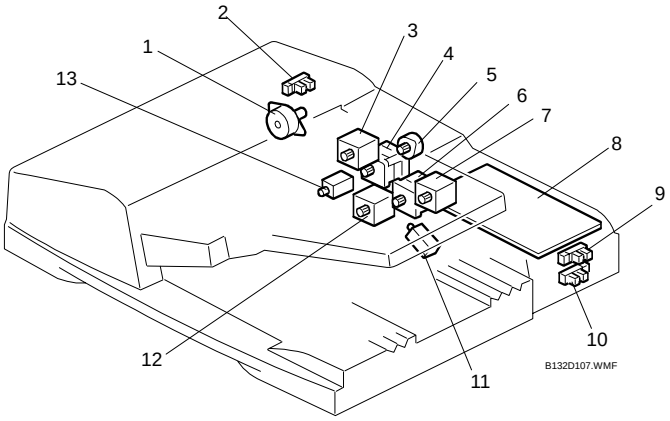

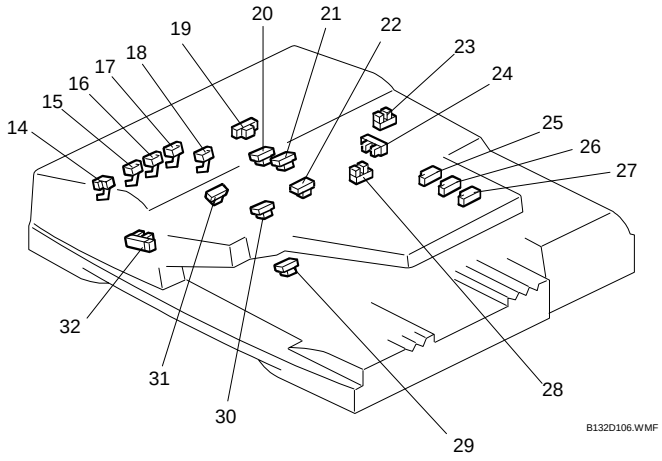

Symbol	Name	Index No.	P to P
Boards			
PCB1	Main Board	8	E4
Motors			
M1	Feed Motor	4	H6
M2	Transport Motor	6	H6
M3	Upper Inverter Motor	7	H5
M4	Exit Motor	3	H5
M5	Lower Inverter Motor	12	H4
M6	Pick-up Motor	1	H4
M7	Bottom Plate Lift Motor	5	H3
Sensors			
S1	Original Width Sensor 1	17	B6
S2	Original Width Sensor 2	16	B6
S3	Original Width Sensor 3	15	B6
S4	Original Width Sensor 4	14	B6
S5	Original Width Sensor 5 (for B6 SEF)	18	B5
S6	Pick-up Roller HP Sensor	2	B5
S7	Original Set Sensor	28	B5
S8	Bottom Plate HP Sensor	32	B5
S9	Feed Cover Open Sensor	23	B4
S10	Bottom Plate Position Sensor	24	B4
S11	Upper Inverter Sensor	22	B4
S12	Lower Inverter Sensor	29	B4
S13	Original Length Sensor 1 (LG)	25	B3
S14	Original Length Sensor 2 (A4)	26	B3
S15	Original Length Sensor 3 (B5)	27	B3
S16	ARDF Position Sensor	9	B2
S17	APS Start Sensor	10	B2
S18	Interval Sensor	19	B2
S19	Skew Correction Sensor	20	B2
S20	Separation Sensor	21	B1
S21	Exit Sensor	30	B1
S22	Registration Sensor	31	B1
Solenoids			
SOL1	Upper Junction Gate Solenoid	11	H3
SOL2	Lower Junction Gate Solenoid	13	H2

Downloaded from www.Manualslib.com manuals search engine

2000/3000 SHEET FINISHER (B700/B701) ELECTRICAL COMPONENT LAYOUT (1/2)

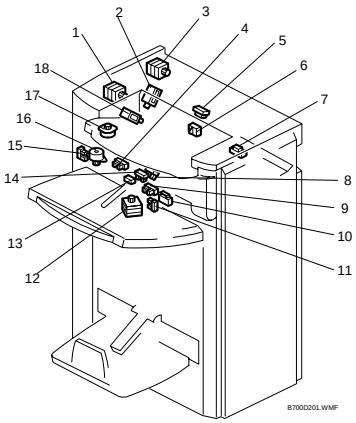

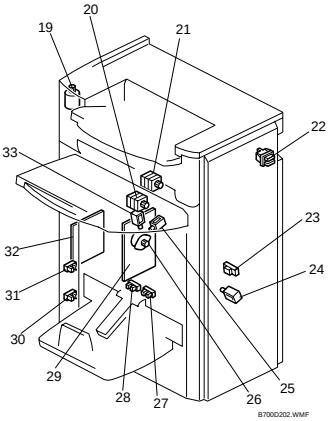

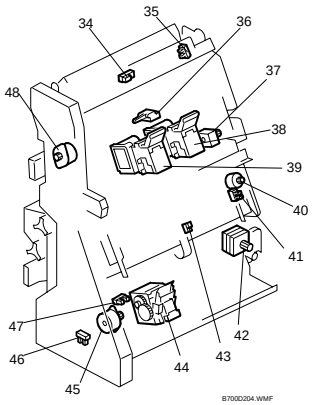

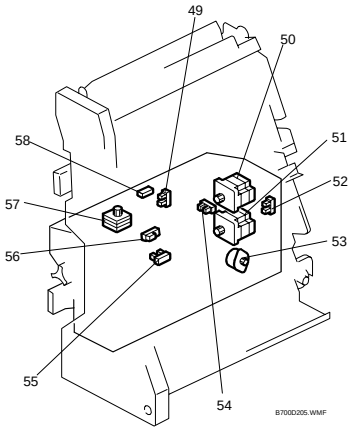

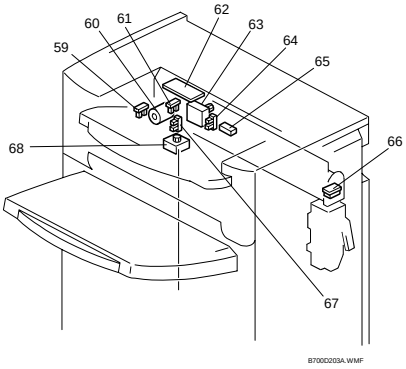

Downloaded from www.Manualslib.com manuals search engine

2000/3000 SHEET FINISHER (B700/B701) ELECTRICAL COMPONENT LAYOUT (2/2)

Symbol	Name	Index No.	P to P	Page
Boards (PCB)				
PCB1	Main Board	29	E1	1/2
PCB2	Booklet Stapler Board	32	E4	2/2
PCB3	Punch Unit Board	62	C1	1/2
Motors				
M1	Entrance Motor	21	I6	1/2
M2	Upper Transport Motor	3	I5	1/2
M3	Lower Transport Motor	20	I6	1/2
M4	Upper/Proof Tray Exit Motor	1	I4	1/2
M5	Feed Out Belt Motor	37	I3	1/2
M6	Corner Stapler Movement Motor	42	I2	1/2
M7	Paper Position Sensor Slide Motor	63	B2	1/2
M8	Clamp Roller Retraction Motor	57	H3	2/2
M9	Punch Movement Motor	68	B2	1/2
M10	Stacking Sponge Roller Motor	12	I1	1/2
M11	Fold Plate Motor	51	H2	2/2
M12	Fold Roller Motor	50	H1	2/2
M13	Corner Stapler Rotation Motor	45	I2	1/2
M14	Positioning Roller Motor	26	I5	1/2
M15	Jogger Fence Motor	40	I3	1/2
M16	Fold Unit Bottom Fence Lift Motor	53	H2	2/2
M17	Stack Junction Gate Motor	48	H3	2/2
M18	Shift Roller Motor	16	15	1/2
M19	Exit Guide Plate Motor	17	I4	1/2
M20	Corner Stapler EH530	44	I2	1/2
M21	Upper Tray Lift Motor	19	I2	1/2
M22	Booklet Stapler EH185R: Front	39	B3	1/2
M23	Booklet Stapler EH185R: Rear	38	B2	1/2
M24	Punch Drive Motor	60	B1	1/2

Symbol	Name	Index No.	P to P	Page
Sensors				
S1	Finisher Entrance Sensor	7	E5	1/2
S2	Pre-stack Tray Exit Sensor	23	E5	1/2
S3	Paper Position Sensor	65	E5	1/2
S4	Punch Hopper Full Sensor	66	E4	1/2
S5	Shift Roller HP Sensor	15	B6	1/2
S6	Upper Tray Exit Sensor	13	B6	1/2
S7	Exit Guide Plate HP Sensor	4	B6	1/2
S8	Upper Tray Paper Height Sensor (Staple Mode)	14	B6	1/2
S9	Upper Tray Paper Height Sensor (Non-Staple Mode)	8	B5	1/2
S10	Proof Tray Exit Sensor	5	B5	1/2
S11	Proof Tray Full Sensor	6	B5	1/2
S12	Upper Tray Limit Sensor	9	B5	1/2
S13	Stacking Roller HP Sensor	11	B5	1/2
S14	Stapling Tray Paper Sensor	43	B4	1/2
S15	Jogger Fence HP Sensor	41	B4	1/2
S16	Stack Feed-Out Belt HP Sensor	36	B4	1/2
S17	Corner Stapler HP Sensor	46	B4	1/2
S18	Stapler Rotation HP Sensor	47	B4	1/2
S19	Upper Tray Full Sensor (B700/B701)	31	B3	1/2
S20	Upper Tray Full Sensor (B701 only)	30	B3	1/2
S21	Punch Movement HP Sensor	67	B2	1/2
S22	Paper Position Side HP Sensor	64	B2	1/2
S23	Punch HP Sensor	61	B1	1/2
S24	Punch Encoder Sensor	59	B1	1/2
S25	Clamp Roller HP Sensor	49	B6	2/2
S26	Fold Unit Entrance Sensor	56	B6	2/2
S27	Stack Junction Gate HP Sensor	35	B5	2/2
S28	Fold Bottom Fence HP Sensor	55	B5	2/2
S29	Fold Plate HP Sensor	52	B5	2/2
S30	Fold Cam HP Sensor	54	B5	2/2
S31	Fold Unit Exit Sensor	58	B4	2/2
S32	Stack Present Sensor	34	B4	2/2
S33	Lower Tray Full Sensor - Rear	28	B1	2/2
S34	Lower Tray Full Sensor - Front	27	B1	2/2
Solenoids				
SOL1	Proof Junction Gate Solenoid	18	I4	1/2
SOL2	Stapling Tray Junction Gate Solenoid	2	I4	1/2
SOL3	Positioning Roller Solenoid	25	I4	1/2
SOL4	Stapling Edge Pressure Plate Solenoid	24	I4	1/2
SOL5	Booklet Pressure Roller Solenoid	33	H5	2/2
Switches				
SW1	Front Door Safety Switch	22	E5	1/2
SW2	Upper Tray Limit SW	10	I1	1/2

Downloaded from www.Manualslib.com manuals search engine

OUTPUT JOGGER UNIT (B703) ELECTRICAL COMPONENT LAYOUT

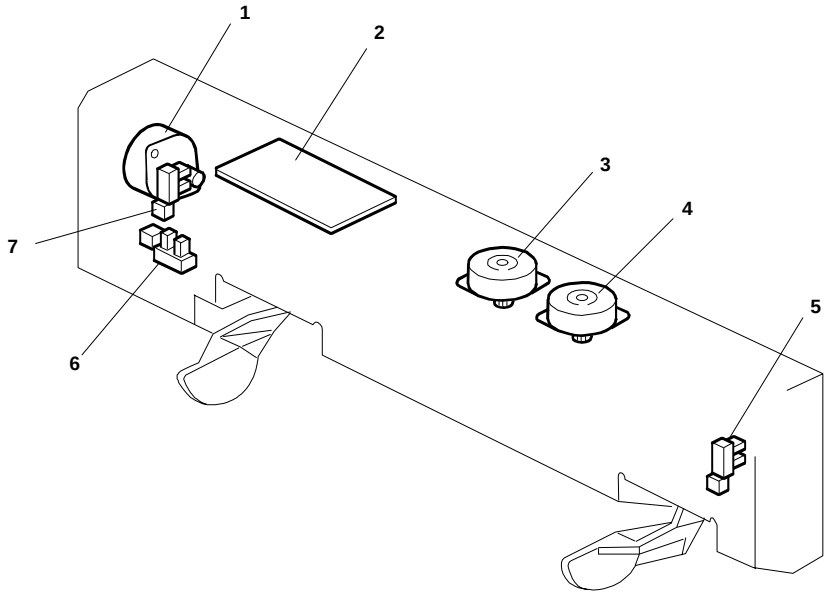

B703D102.WMF

Symbol	Name	Index No.	P to P
Board			
PCB1	Main Board	2	C3
Motors			
M1	Front Jogger Motor	4	F3
M2	Rear Jogger Motor	3	F3
M3	Jogger Lift Motor	1	F4
Sensors			
S1	Front Jogger HP Sensor	5	F1
S2	Rear Jogger HP Sensor	7	F1
S3	Jogger Lift HP Sensor	6	F2

Downloaded from www.Manualslib.com manuals search engine

MAILBOX (B762) ELECTRICAL COMPONENT LAYOUT

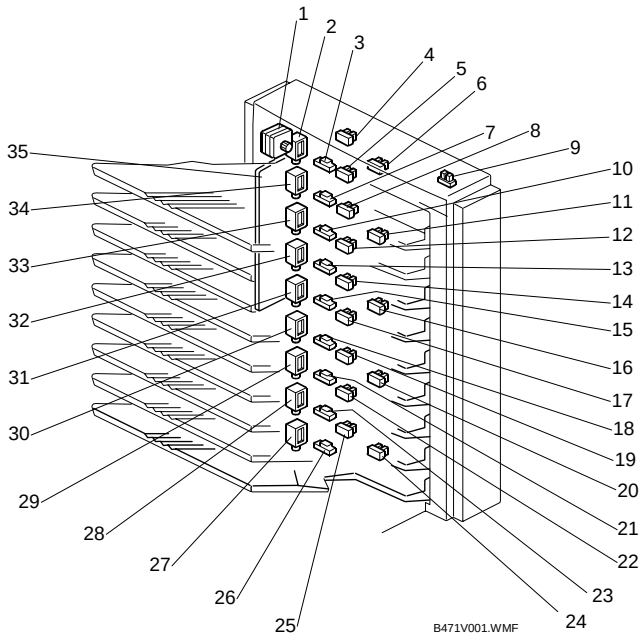

Symbol	Index No.	Description	P to P
Motors			
M1	1	Main	H1
Sensors			
S1	26	Paper Detect 1	I7
S2	24	Transport 1	I7
S3	25	Paper Overflow 1	I6
S4	23	Paper Detect 2	I6
S5	20	Transport 2	I6
S6	22	Paper Overflow 2	I5-I6
S7	21	Paper Detect 3	I5
S8	19	Paper Overflow 3	I5
S9	18	Paper Detect 4	I5
S10	16	Transport 3	B7
S11	17	Paper Overflow 4	B7
S12	15	Paper Detect 5	B6
S13	14	Paper Overflow 5	B6
S14	13	Paper Detect 6	B6
S15	11	Transport 4	B5-B6
S16	12	Paper Overflow 6	B5
S17	10	Paper Detect 7	B5
S18	8	Paper Overflow 7	B5
S19	7	Paper Detect 8	B4
S20	6	Transport 5	B4
S21	5	Paper Overflow 8	B4
S22	4	Paper Detect 9	B3
S23	3	Paper Overflow 9	B3
S24	4	Door Safety	B3
Solenoids			
SOL1	28	Turn Gate 1	I4
SOL2	29	Turn Gate 2	I4
SOL3	30	Turn Gate 3	I3
SOL4	31	Turn Gate 4	I3
SOL5	32	Turn Gate 5	I3
SOL6	33	Turn Gate 6	I2
SOL7	34	Turn Gate 7	I2
SOL8	2	Turn Gate 8	I2
SOL9	27	Junction Gate	I4
PCBs			
PCB1	35	Main	E1-E7

Downloaded from www.Manualslib.com manuals search engine

COVER INTERPOSER (B704) ELECTRICAL COMPONENT LAYOUT

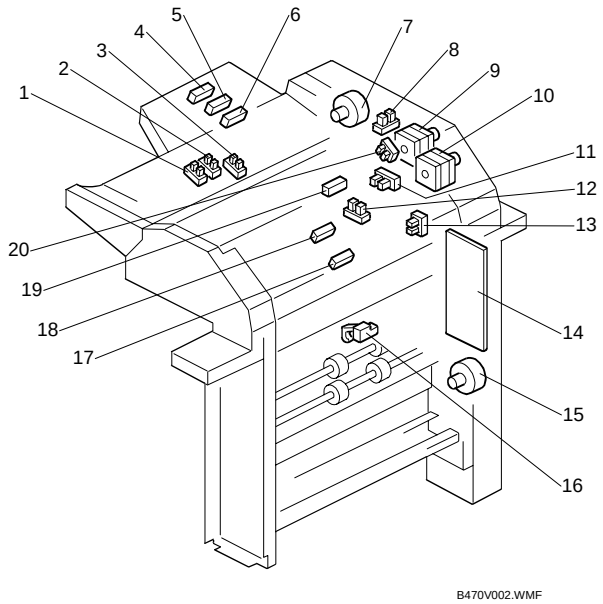

B470V002.WMF

Symbol	Index No.	Description	P to P
Motor			
M1	9	Feed	I2
M2	10	Transport	I2-I3
M3	7	Bottom Plate	I3
M4	15	Relay	I4
Sensor			
S1	8	Cover Set	B5
S2	20	Bottom Plate Position	B5
S3	11	Near End	B5
S4	18	Feed	B6
S5	12	Bottom Plate HP	B6
S6	17	Pull-out	B6
S7	13	Guide Plate Set	B6-B7
S8	16	Exit	B7
S9	19	Paper Set	I5
S10	3	Paper Width 1	I5
S11	2	Paper Width 2	I5
S12	1	Paper Width 3	I6
S13	6	Paper Length 1	I6
S14	5	Paper Length 2	I6
S15	4	Paper Length 3	I7
PCB			
PCB1	14	Main	E2-E7

Downloaded from www.Manualslib.com manuals search engine

LCT (B473) ELECTRICAL COMPONENT LAYOUT

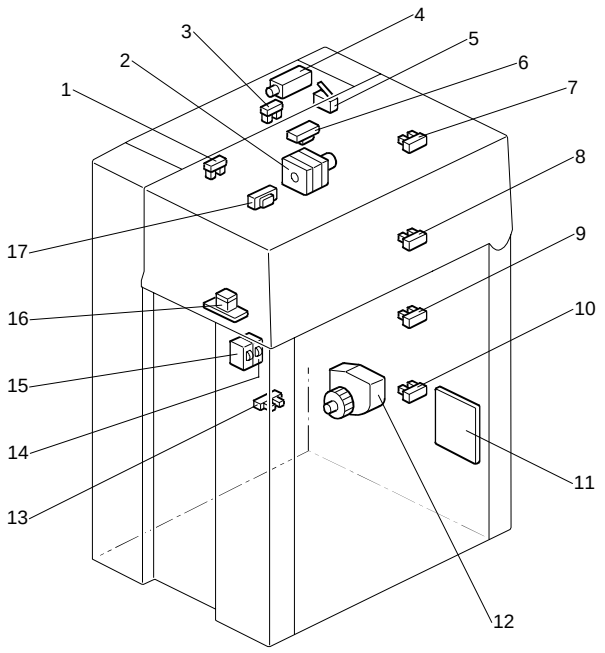

B473V002.WMF

Symbol	Index No.	Description	P to P
Motors			
M1	2	Paper Feed	G1
M2	12	Lift	G2
Sensors			
S1	1	Paper Feed	G4
S2	6	Paper End	G5
S3	3	Lift	G4
S4	17	Paper Position	G3-G4
S5	13	Down	G5
S6	7	Near End	B4
S7	8	Paper Height 1	B4
S8	9	Paper Height 2	B5
S9	10	Paper Height 3	B5
Switches			
SW1	15	Tray Cover	G3
SW3	14	Lift	G2
SW4	5	Feed Unit Cover	G3
SW5	16	Down	G6
Solenoids			
SOL1	4	Pick-up	G5
PCBs			
PCB1	11	LCT Interface	D1-D6

Downloaded from www.Manualslib.com manuals search engine

3000-SHEET FINISHER (B706) ELECTRICAL COMPONENT LAYOUT

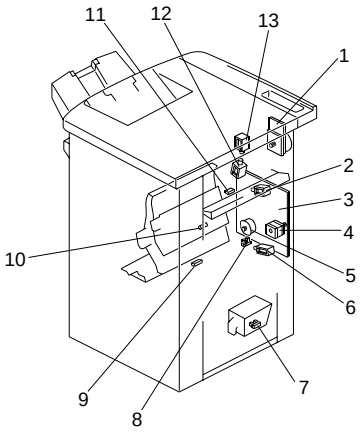

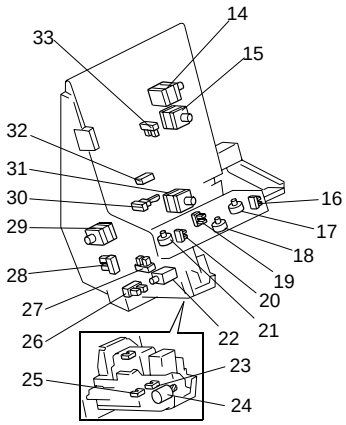

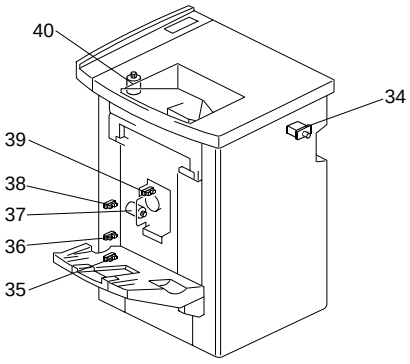

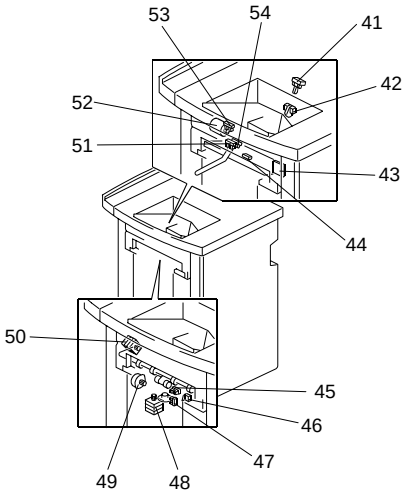

Symbol	Index No.	Description	P to P
Sensor			
S1	11	Entrance Sensor	A1
S2	41	Upper Tray Exit Sensor	A1
S3	42	Upper Tray Limit Sensor	A1
S4	44	Shift Tray Exit Sensor	A2
S5	53	Exit Guide Open Sensor	A2
S6	54	Shift Paper Height Sensor	A2
S7	51	Stapling Paper Height Sensor	A2
S9	38	Shift Lower Limit - Large Paper Sensor	A3
S10	36	Shift Lower Limit 2 Sensor	A3
S11	35	Shift Lower Limit 3 Sensor	A3
S12	45	Shift Tray Paper Height Sensor	A3
S13	47	Stacking Roller HP	A3
S14	39	Shift Tray Half-Turn Sensor	A4
S15	10	Pre-Stack Tray Paper Sensor	A4
S16	9	Stapler Tray Entrance Sensor	A4
S17	8	Positioning Roller HP Sensor	A4
S18	30	Stack Feed-Out Belt HP Sensor	A4
S19	32	Stapler Tray Paper Sensor	A5
S20	33	Jogger HP Sensor	A5
S21	19	Stack Plate-Center HP Sensor	A5
S22	20	Stack Plate-Front HP Sensor	A5
S23	16	Stack Plate-Rear HP Sensor	A5
S24	28	Stapler HP Sensor	A6
S25	26	Stapler Rotation HP Sensor	A6
S26	27	Stapler Return Sensor	A6
S27	7	Staple Waste Hopper Sensor	A6
S28	-	Punch Waste Hopper Sensor	I3
S29	-	Punch HP Sensor 1	I3
S30	-	Punch HP Sensor 2	I3
S31	-	Shift Jogger HP Sensor	J5
S32	-	Shift Jogger Lift HP Sensor	J5
Motor			
M1	50	Shift Tray Exit Motor	A7
M2	40	Shift Tray Lift Motor	A7
M3	52	Exit Guide Motor	A7
M4	4	Lower Transport Motor	F1
M5	37	Shift Motor	F1
M6	5	Positioning Roller Motor	F3
M7	48	Stacking Roller Drug Motor	F3
M8	49	Stacking Roller Motor	F3
M9	15	Jogger Motor	F4
M10	14	Stack Feed-Out Belt Motor	F4
M11	18	Stack Plate-Center Motor	F5
M12	31	Stapler Motor	F5
M13	21	Stack Plate-Front Motor	F5
M14	17	Stack Plate-Rear Motor	F6
M15	29	Stapler Rotation Motor	I1
M16	24	Stapler Hammer Motor	I2
M17	-	Punch Motor	I3
M18	1	Upper Transport Motor	I4
M19	-	Shift Jogger Motor	J6
M20	-	Shift Jogger Lift Motor	J6
Solenoid			
SOL1	13	Upper Tray Junction Gate Solenoid	F2
SOL2	12	Stapler Junction Gate Solenoid	F2
SOL3	2	Pre-Stack Junction Gate Solenoid	F2
SOL4	6	Pre-Stack Paper Stopper Solenoid	F3
SOL5	22	Stapler Return Solenoid	I2
Switch			
SW1	46	Shift Tray Upper Limit Switch	F2
SW2	34	Front Door Safety Switch	E6
SW3	43	Emergency Stop Switch	I4
PCB			
PCB	3	Main Board	-

Downloaded from www.Manualslib.com manuals search engine

Downloaded from www.Manualslib.com manuals search engine

TOSHIBA

TOSHIBA TEC CORPORATION

2-17-2, HIGASHIGOTANDA, SHINAGAWA-KU, TOKYO, 141-8664, JAPAN

Downloaded from www.Manualslib.com manuals search engine